



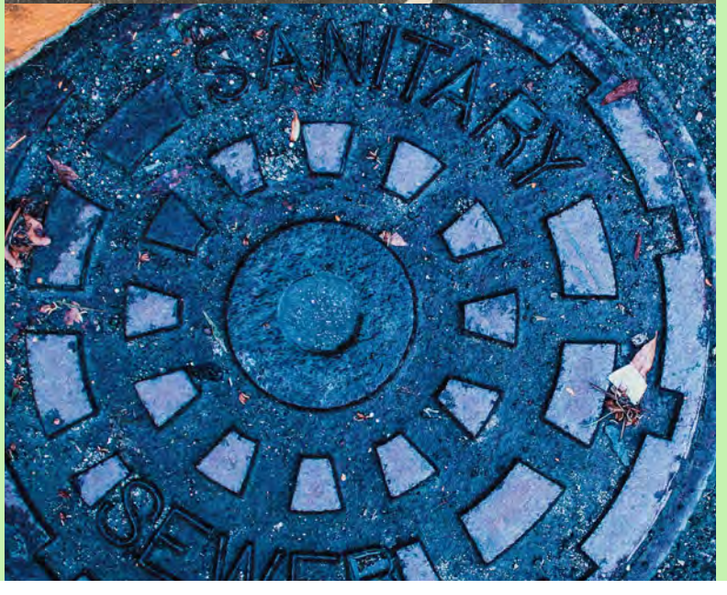

GARDEN GROVE SANITARY DISTRICT SEWER SYSTEM MANAGEMENT PLAN APPENDICES APRIL 2020

APPENDICES

Appendix A – Introduction

- A-1 State Water Resources Control Board Order No. 2006-0003-DWQ
- A-2 State Water Resources Control Board Order No. WQ 2013-0058-EXEC

Appendix B – Organization

- B-1 Roles and Responsibilities
- B-2 Reporting Guidelines

Appendix C – Legal Authority

- C-1 Code of Regulations (2010)
- C-2 Stormwater Quality
- C-3 Ordinance No. 6 (FOG Requirements)
- C-4 City of Anaheim Agreement
- C-5 City of Orange Agreement
- C-6 City of Stanton Agreement
- C-7 City of Midway Agreement
- C-8 City of Santa Ana Agreement

Appendix D – O&M

- D-1 Sewer and Storm Drain Map
- D-2 Pump Station Description
- D-3 CCTV Database
- D-4 Condition Assessment Priorities
- D-5 Equipment Inventory

Appendix E – Design and Performance and Overflow Emergency Response Plan

- E-1 Design Criteria for Sewer Facilities
- E-2 Standard Drawings
- E-3 Overflow Emergency Response Plan

Appendix F – FOG Control Program

- F-1 FOG Control Program for Food Service Establishments
- F-2 FOG Informational Handouts
- F-3 Certified Liquid Wastehauler Vehicles

Appendix G – SECAP

- G-1 Recommended Capacity Improvement Projects
- G-2 Ordinance No. 10

Appendix A-1

State Water Resources Control Board Order No. 2006-0003-DWQ

STATE WATER RESOURCES CONTROL BOARD
ORDER NO. 2006-0003-DWQ

STATEWIDE GENERAL WASTE DISCHARGE REQUIREMENTS FOR SANITARY SEWER SYSTEMS

The State Water Resources Control Board, hereinafter referred to as "State Water Board", finds that:

1. All federal and state agencies, municipalities, counties, districts, and other public entities that own or operate sanitary sewer systems greater than one mile in length that collect and/or convey untreated or partially treated wastewater to a publicly owned treatment facility in the State of California are required to comply with the terms of this Order. Such entities are hereinafter referred to as "Enrollees".

2. Sanitary sewer overflows (SSOs) are overflows from sanitary sewer systems of domestic wastewater, as well as industrial and commercial wastewater, depending on the pattern of land uses in the area served by the sanitary sewer system. SSOs often contain high levels of suspended solids, pathogenic organisms, toxic pollutants, nutrients, oxygen-demanding organic compounds, oil and grease and other pollutants. SSOs may cause a public nuisance, particularly when raw untreated wastewater is discharged to areas with high public exposure, such as streets or surface waters used for drinking, fishing, or body contact recreation. SSOs may pollute surface or ground waters, threaten public health, adversely affect aquatic life, and impair the recreational use and aesthetic enjoyment of surface waters.

3. Sanitary sewer systems experience periodic failures resulting in discharges that may affect waters of the state. There are many factors (including factors related to geology, design, construction methods and materials, age of the system, population growth, and system operation and maintenance), which affect the likelihood of an SSO. A proactive approach that requires Enrollees to ensure a system-wide operation, maintenance, and management plan is in place will reduce the number and frequency of SSOs within the state. This approach will in turn decrease the risk to human health and the environment caused by SSOs.

4. Major causes of SSOs include: grease blockages, root blockages, sewer line flood damage, manhole structure failures, vandalism, pump station mechanical failures, power outages, excessive storm or ground water inflow/infiltration, debris blockages, sanitary sewer system age and construction material failures, lack of proper operation and maintenance, insufficient capacity and contractor-caused damages. Many SSOs are preventable with adequate and appropriate facilities, source control measures and operation and maintenance of the sanitary sewer system.

SEWER SYSTEM MANAGEMENT PLANS

5. To facilitate proper funding and management of sanitary sewer systems, each Enrollee must develop and implement a system-specific Sewer System Management Plan (SSMP). To be effective, SSMPs must include provisions to provide proper and efficient management, operation, and maintenance of sanitary sewer systems, while taking into consideration risk management and cost benefit analysis. Additionally, an SSMP must contain a spill response plan that establishes standard procedures for immediate response to an SSO in a manner designed to minimize water quality impacts and potential nuisance conditions.

6. Many local public agencies in California have already developed SSMPs and implemented measures to reduce SSOs. These entities can build upon their existing efforts to establish a comprehensive SSMP consistent with this Order. Others, however, still require technical assistance and, in some cases, funding to improve sanitary sewer system operation and maintenance in order to reduce SSOs.

7. SSMP certification by technically qualified and experienced persons can provide a useful and cost-effective means for ensuring that SSMPs are developed and implemented appropriately.

8. It is the State Water Board's intent to gather additional information on the causes and sources of SSOs to augment existing information and to determine the full extent of SSOs and consequent public health and/or environmental impacts occurring in the State.

9. Both uniform SSO reporting and a centralized statewide electronic database are needed to collect information to allow the State Water Board and Regional Water Quality Control Boards (Regional Water Boards) to effectively analyze the extent of SSOs statewide and their potential impacts on beneficial uses and public health. The monitoring and reporting program required by this Order and the attached Monitoring and Reporting Program No. 2006-0003-DWQ, are necessary to assure compliance with these waste discharge requirements (WDRs).

10. Information regarding SSOs must be provided to Regional Water Boards and other regulatory agencies in a timely manner and be made available to the public in a complete, concise, and timely fashion.

11. Some Regional Water Boards have issued WDRs or WDRs that serve as National Pollution Discharge Elimination System (NPDES) permits to sanitary sewer system owners/operators within their jurisdictions. This Order establishes minimum requirements to prevent SSOs. Although it is the State Water Board's intent that this Order be the primary regulatory mechanism for sanitary sewer systems statewide, Regional Water Boards may issue more stringent or more

prescriptive WDRs for sanitary sewer systems. Upon issuance or reissuance of a Regional Water Board's WDRs for a system subject to this Order, the Regional Water Board shall coordinate its requirements with stated requirements within this Order, to identify requirements that are more stringent, to remove requirements that are less stringent than this Order, and to provide consistency in reporting.

REGULATORY CONSIDERATIONS

12. California Water Code section 13263 provides that the State Water Board may prescribe general WDRs for a category of discharges if the State Water Board finds or determines that:

    - The discharges are produced by the same or similar operations;
    - The discharges involve the same or similar types of waste;
    - The discharges require the same or similar treatment standards; and
    - The discharges are more appropriately regulated under general discharge requirements than individual discharge requirements.

    This Order establishes requirements for a class of operations, facilities, and discharges that are similar throughout the state.

13. The issuance of general WDRs to the Enrollees will:
    a) Reduce the administrative burden of issuing individual WDRs to each Enrollee;
    b) Provide for a unified statewide approach for the reporting and database tracking of SSOs;
    c) Establish consistent and uniform requirements for SSMP development and implementation;
    d) Provide statewide consistency in reporting; and
    e) Facilitate consistent enforcement for violations.

14. The beneficial uses of surface waters that can be impaired by SSOs include, but are not limited to, aquatic life, drinking water supply, body contact and non-contact recreation, and aesthetics. The beneficial uses of ground water that can be impaired include, but are not limited to, drinking water and agricultural supply. Surface and ground waters throughout the state support these uses to varying degrees.

15. The implementation of requirements set forth in this Order will ensure the reasonable protection of past, present, and probable future beneficial uses of water and the prevention of nuisance. The requirements implement the water quality control plans (Basin Plans) for each region and take into account the environmental characteristics of hydrographic units within the state. Additionally, the State Water Board has considered water quality conditions that could reasonably be achieved through the coordinated control of all factors that affect

water quality in the area, costs associated with compliance with these requirements, the need for developing housing within California, and the need to develop and use recycled water.

16. The Federal Clean Water Act largely prohibits any discharge of pollutants from a point source to waters of the United States except as authorized under an NPDES permit. In general, any point source discharge of sewage effluent to waters of the United States must comply with technology-based, secondary treatment standards, at a minimum, and any more stringent requirements necessary to meet applicable water quality standards and other requirements. Hence, the unpermitted discharge of wastewater from a sanitary sewer system to waters of the United States is illegal under the Clean Water Act. In addition, many Basin Plans adopted by the Regional Water Boards contain discharge prohibitions that apply to the discharge of untreated or partially treated wastewater. Finally, the California Water Code generally prohibits the discharge of waste to land prior to the filing of any required report of waste discharge and the subsequent issuance of either WDRs or a waiver of WDRs.

17. California Water Code section 13263 requires a water board to, after any necessary hearing, prescribe requirements as to the nature of any proposed discharge, existing discharge, or material change in an existing discharge. The requirements shall, among other things, take into consideration the need to prevent nuisance.

18. California Water Code section 13050, subdivision (m), defines nuisance as anything which meets all of the following requirements:
    a. Is injurious to health, or is indecent or offensive to the senses, or an obstruction to the free use of property, so as to interfere with the comfortable enjoyment of life or property.
    b. Affects at the same time an entire community or neighborhood, or any considerable number of persons, although the extent of the annoyance or damage inflicted upon individuals may be unequal.
    c. Occurs during, or as a result of, the treatment or disposal of wastes.

19. This Order is consistent with State Water Board Resolution No. 68-16 (Statement of Policy with Respect to Maintaining High Quality of Waters in California) in that the Order imposes conditions to prevent impacts to water quality, does not allow the degradation of water quality, will not unreasonably affect beneficial uses of water, and will not result in water quality less than prescribed in State Water Board or Regional Water Board plans and policies.

20. The action to adopt this General Order is exempt from the California Environmental Quality Act (Public Resources Code §21000 et seq.) because it is an action taken by a regulatory agency to assure the protection of the environment and the regulatory process involves procedures for protection of the environment. (Cal. Code Regs., tit. 14, §15308). In addition, the action to adopt

this Order is exempt from CEQA pursuant to Cal.Code Regs., title 14, §15301 to the extent that it applies to existing sanitary sewer collection systems that constitute "existing facilities" as that term is used in Section 15301, and §15302, to the extent that it results in the repair or replacement of existing systems involving negligible or no expansion of capacity.

21. The Fact Sheet, which is incorporated by reference in the Order, contains supplemental information that was also considered in establishing these requirements.

22. The State Water Board has notified all affected public agencies and all known interested persons of the intent to prescribe general WDRs that require Enrollees to develop SSMPs and to report all SSOs.

23. The State Water Board conducted a public hearing on February 8, 2006, to receive oral and written comments on the draft order. The State Water Board received and considered, at its May 2, 2006, meeting, additional public comments on substantial changes made to the proposed general WDRs following the February 8, 2006, public hearing. The State Water Board has considered all comments pertaining to the proposed general WDRs.

IT IS HEREBY ORDERED, that pursuant to California Water Code section 13263, the Enrollees, their agents, successors, and assigns, in order to meet the provisions contained in Division 7 of the California Water Code and regulations adopted hereunder, shall comply with the following:

A. DEFINITIONS

1. **Sanitary sewer overflow (SSO)** - Any overflow, spill, release, discharge or diversion of untreated or partially treated wastewater from a sanitary sewer system. SSOs include:
   (i) Overflows or releases of untreated or partially treated wastewater that reach waters of the United States;
   (ii) Overflows or releases of untreated or partially treated wastewater that do not reach waters of the United States; and
   (iii) Wastewater backups into buildings and on private property that are caused by blockages or flow conditions within the publicly owned portion of a sanitary sewer system.

2. **Sanitary sewer system** – Any system of pipes, pump stations, sewer lines, or other conveyances, upstream of a wastewater treatment plant headworks used to collect and convey wastewater to the publicly owned treatment facility. Temporary storage and conveyance facilities (such as vaults, temporary piping, construction trenches, wet wells, impoundments, tanks, etc.) are considered to be part of the sanitary sewer system, and discharges into these temporary storage facilities are not considered to be SSOs.

For purposes of this Order, sanitary sewer systems include only those systems owned by public agencies that are comprised of more than one mile of pipes or sewer lines.

3. **Enrollee** - A federal or state agency, municipality, county, district, and other public entity that owns or operates a sanitary sewer system, as defined in the general WDRs, and that has submitted a complete and approved application for coverage under this Order.

4. **SSO Reporting System** – Online spill reporting system that is hosted, controlled, and maintained by the State Water Board. The web address for this site is http://ciwqs.waterboards.ca.gov. This online database is maintained on a secure site and is controlled by unique usernames and passwords.

5. **Untreated or partially treated wastewater** – Any volume of waste discharged from the sanitary sewer system upstream of a wastewater treatment plant headworks.

6. **Satellite collection system** – The portion, if any, of a sanitary sewer system owned or operated by a different public agency than the agency that owns and operates the wastewater treatment facility to which the sanitary sewer system is tributary.

7. **Nuisance** - California Water Code section 13050, subdivision (m), defines nuisance as anything which meets all of the following requirements:
    a. Is injurious to health, or is indecent or offensive to the senses, or an obstruction to the free use of property, so as to interfere with the comfortable enjoyment of life or property.
    b. Affects at the same time an entire community or neighborhood, or any considerable number of persons, although the extent of the annoyance or damage inflicted upon individuals may be unequal.
    c. Occurs during, or as a result of, the treatment or disposal of wastes.

B. APPLICATION REQUIREMENTS

1. Deadlines for Application – All public agencies that currently own or operate sanitary sewer systems within the State of California must apply for coverage under the general WDRs within six (6) months of the date of adoption of the general WDRs. Additionally, public agencies that acquire or assume responsibility for operating sanitary sewer systems after the date of adoption of this Order must apply for coverage under the general WDRs at least three (3) months prior to operation of those facilities.

2. Applications under the general WDRs – In order to apply for coverage pursuant to the general WDRs, a legally authorized representative for each agency must submit a complete application package. Within sixty (60) days of adoption of the general WDRs, State Water Board staff will send specific instructions on how to

apply for coverage under the general WDRs to all known public agencies that own sanitary sewer systems. Agencies that do not receive notice may obtain applications and instructions online on the Water Board's website.

3. Coverage under the general WDRs – Permit coverage will be in effect once a complete application package has been submitted and approved by the State Water Board's Division of Water Quality.

C. PROHIBITIONS

1. Any SSO that results in a discharge of untreated or partially treated wastewater to waters of the United States is prohibited.

2. Any SSO that results in a discharge of untreated or partially treated wastewater that creates a nuisance as defined in California Water Code Section 13050(m) is prohibited.

D. PROVISIONS

1. The Enrollee must comply with all conditions of this Order. Any noncompliance with this Order constitutes a violation of the California Water Code and is grounds for enforcement action.

2. It is the intent of the State Water Board that sanitary sewer systems be regulated in a manner consistent with the general WDRs. Nothing in the general WDRs shall be:

    (i) Interpreted or applied in a manner inconsistent with the Federal Clean Water Act, or supersede a more specific or more stringent state or federal requirement in an existing permit, regulation, or administrative/judicial order or Consent Decree;
    (ii) Interpreted or applied to authorize an SSO that is illegal under either the Clean Water Act, an applicable Basin Plan prohibition or water quality standard, or the California Water Code;
    (iii) Interpreted or applied to prohibit a Regional Water Board from issuing an individual NPDES permit or WDR, superseding this general WDR, for a sanitary sewer system, authorized under the Clean Water Act or California Water Code; or
    (iv) Interpreted or applied to supersede any more specific or more stringent WDRs or enforcement order issued by a Regional Water Board.

3. The Enrollee shall take all feasible steps to eliminate SSOs. In the event that an SSO does occur, the Enrollee shall take all feasible steps to contain and mitigate the impacts of an SSO.

4. In the event of an SSO, the Enrollee shall take all feasible steps to prevent untreated or partially treated wastewater from discharging from storm drains into

flood control channels or waters of the United States by blocking the storm drainage system and by removing the wastewater from the storm drains.

5. All SSOs must be reported in accordance with Section G of the general WDRs.

6. In any enforcement action, the State and/or Regional Water Boards will consider the appropriate factors under the duly adopted State Water Board Enforcement Policy. And, consistent with the Enforcement Policy, the State and/or Regional Water Boards must consider the Enrollee's efforts to contain, control, and mitigate SSOs when considering the California Water Code Section 13327 factors. In assessing these factors, the State and/or Regional Water Boards will also consider whether:

   (i) The Enrollee has complied with the requirements of this Order, including requirements for reporting and developing and implementing a SSMP;

   (ii) The Enrollee can identify the cause or likely cause of the discharge event;

   (iii) There were no feasible alternatives to the discharge, such as temporary storage or retention of untreated wastewater, reduction of inflow and infiltration, use of adequate backup equipment, collecting and hauling of untreated wastewater to a treatment facility, or an increase in the capacity of the system as necessary to contain the design storm event identified in the SSMP. It is inappropriate to consider the lack of feasible alternatives, if the Enrollee does not implement a periodic or continuing process to identify and correct problems.

   (iv) The discharge was exceptional, unintentional, temporary, and caused by factors beyond the reasonable control of the Enrollee;

   (v) The discharge could have been prevented by the exercise of reasonable control described in a certified SSMP for:
      - Proper management, operation and maintenance;
      - Adequate treatment facilities, sanitary sewer system facilities, and/or components with an appropriate design capacity, to reasonably prevent SSOs (e.g., adequately enlarging treatment or collection facilities to accommodate growth, infiltration and inflow (I/I), etc.);
      - Preventive maintenance (including cleaning and fats, oils, and grease (FOG) control);
      - Installation of adequate backup equipment; and
      - Inflow and infiltration prevention and control to the extent practicable.

   (vi) The sanitary sewer system design capacity is appropriate to reasonably prevent SSOs.

(vii) The Enrollee took all reasonable steps to stop and mitigate the impact of the discharge as soon as possible.

7. When a sanitary sewer overflow occurs, the Enrollee shall take all feasible steps and necessary remedial actions to 1) control or limit the volume of untreated or partially treated wastewater discharged, 2) terminate the discharge, and 3) recover as much of the wastewater discharged as possible for proper disposal, including any wash down water.

   The Enrollee shall implement all remedial actions to the extent they may be applicable to the discharge and not inconsistent with an emergency response plan, including the following:

   (i) Interception and rerouting of untreated or partially treated wastewater flows around the wastewater line failure;
   (ii) Vacuum truck recovery of sanitary sewer overflows and wash down water;
   (iii) Cleanup of debris at the overflow site;
   (iv) System modifications to prevent another SSO at the same location;
   (v) Adequate sampling to determine the nature and impact of the release; and
   (vi) Adequate public notification to protect the public from exposure to the SSO.

8. The Enrollee shall properly, manage, operate, and maintain all parts of the sanitary sewer system owned or operated by the Enrollee, and shall ensure that the system operators (including employees, contractors, or other agents) are adequately trained and possess adequate knowledge, skills, and abilities.

9. The Enrollee shall allocate adequate resources for the operation, maintenance, and repair of its sanitary sewer system, by establishing a proper rate structure, accounting mechanisms, and auditing procedures to ensure an adequate measure of revenues and expenditures. These procedures must be in compliance with applicable laws and regulations and comply with generally acceptable accounting practices.

10. The Enrollee shall provide adequate capacity to convey base flows and peak flows, including flows related to wet weather events. Capacity shall meet or exceed the design criteria as defined in the Enrollee's System Evaluation and Capacity Assurance Plan for all parts of the sanitary sewer system owned or operated by the Enrollee.

11. The Enrollee shall develop and implement a written Sewer System Management Plan (SSMP) and make it available to the State and/or Regional Water Board upon request. A copy of this document must be publicly available at the Enrollee's office and/or available on the Internet. This SSMP must be approved by the Enrollee's governing board at a public meeting.

12. In accordance with the California Business and Professions Code sections 6735, 7835, and 7835.1, all engineering and geologic evaluations and judgments shall be performed by or under the direction of registered professionals competent and proficient in the fields pertinent to the required activities. Specific elements of the SSMP that require professional evaluation and judgments shall be prepared by or under the direction of appropriately qualified professionals, and shall bear the professional(s)' signature and stamp.

13. The mandatory elements of the SSMP are specified below. However, if the Enrollee believes that any element of this section is not appropriate or applicable to the Enrollee's sanitary sewer system, the SSMP program does not need to address that element. The Enrollee must justify why that element is not applicable. The SSMP must be approved by the deadlines listed in the SSMP Time Schedule below.

Sewer System Management Plan (SSMP)

(i) **Goal**: The goal of the SSMP is to provide a plan and schedule to properly manage, operate, and maintain all parts of the sanitary sewer system. This will help reduce and prevent SSOs, as well as mitigate any SSOs that do occur.

(ii) **Organization**: The SSMP must identify:

(a) The name of the responsible or authorized representative as described in Section J of this Order.

(b) The names and telephone numbers for management, administrative, and maintenance positions responsible for implementing specific measures in the SSMP program. The SSMP must identify lines of authority through an organization chart or similar document with a narrative explanation; and

(c) The chain of communication for reporting SSOs, from receipt of a complaint or other information, including the person responsible for reporting SSOs to the State and Regional Water Board and other agencies if applicable (such as County Health Officer, County Environmental Health Agency, Regional Water Board, and/or State Office of Emergency Services (OES)).

(iii) **Legal Authority:** Each Enrollee must demonstrate, through sanitary sewer system use ordinances, service agreements, or other legally binding procedures, that it possesses the necessary legal authority to:

(a) Prevent illicit discharges into its sanitary sewer system (examples may include I/I, stormwater, chemical dumping, unauthorized debris and cut roots, etc.);

(b) Require that sewers and connections be properly designed and constructed;

(c) Ensure access for maintenance, inspection, or repairs for portions of the lateral owned or maintained by the Public Agency;

(d) Limit the discharge of fats, oils, and grease and other debris that may cause blockages, and

(e) Enforce any violation of its sewer ordinances.

(iv) **Operation and Maintenance Program**. The SSMP must include those elements listed below that are appropriate and applicable to the Enrollee's system:

(a) Maintain an up-to-date map of the sanitary sewer system, showing all gravity line segments and manholes, pumping facilities, pressure pipes and valves, and applicable stormwater conveyance facilities;

(b) Describe routine preventive operation and maintenance activities by staff and contractors, including a system for scheduling regular maintenance and cleaning of the sanitary sewer system with more frequent cleaning and maintenance targeted at known problem areas. The Preventative Maintenance (PM) program should have a system to document scheduled and conducted activities, such as work orders;

(c) Develop a rehabilitation and replacement plan to identify and prioritize system deficiencies and implement short-term and long-term rehabilitation actions to address each deficiency. The program should include regular visual and TV inspections of manholes and sewer pipes, and a system for ranking the condition of sewer pipes and scheduling rehabilitation. Rehabilitation and replacement should focus on sewer pipes that are at risk of collapse or prone to more frequent blockages due to pipe defects. Finally, the rehabilitation and replacement plan should include a capital improvement plan that addresses proper management and protection of the infrastructure assets. The plan shall include a time schedule for implementing the short- and long-term plans plus a schedule for developing the funds needed for the capital improvement plan;

(d) Provide training on a regular basis for staff in sanitary sewer system operations and maintenance, and require contractors to be appropriately trained; and

(e) Provide equipment and replacement part inventories, including identification of critical replacement parts.

(v) **Design and Performance Provisions**:

(a) Design and construction standards and specifications for the installation of new sanitary sewer systems, pump stations and other appurtenances; and for the rehabilitation and repair of existing sanitary sewer systems; and

(b) Procedures and standards for inspecting and testing the installation of new sewers, pumps, and other appurtenances and for rehabilitation and repair projects.

(vi) **Overflow Emergency Response Plan -** Each Enrollee shall develop and implement an overflow emergency response plan that identifies measures to protect public health and the environment. At a minimum, this plan must include the following:

(a) Proper notification procedures so that the primary responders and regulatory agencies are informed of all SSOs in a timely manner;

(b) A program to ensure an appropriate response to all overflows;

(c) Procedures to ensure prompt notification to appropriate regulatory agencies and other potentially affected entities (e.g. health agencies, Regional Water Boards, water suppliers, etc.) of all SSOs that potentially affect public health or reach the waters of the State in accordance with the MRP. All SSOs shall be reported in accordance with this MRP, the California Water Code, other State Law, and other applicable Regional Water Board WDRs or NPDES permit requirements. The SSMP should identify the officials who will receive immediate notification;

(d) Procedures to ensure that appropriate staff and contractor personnel are aware of and follow the Emergency Response Plan and are appropriately trained;

(e) Procedures to address emergency operations, such as traffic and crowd control and other necessary response activities; and

(f) A program to ensure that all reasonable steps are taken to contain and prevent the discharge of untreated and partially treated wastewater to waters of the United States and to minimize or correct any adverse impact on the environment resulting from the SSOs, including such accelerated or additional monitoring as may be necessary to determine the nature and impact of the discharge.

(vii) **FOG Control Program:** Each Enrollee shall evaluate its service area to determine whether a FOG control program is needed. If an Enrollee determines that a FOG program is not needed, the Enrollee must provide justification for why it is not needed. If FOG is found to be a problem, the Enrollee must prepare and implement a FOG source control program to reduce the amount of these substances discharged to the sanitary sewer system. This plan shall include the following as appropriate:

(a) An implementation plan and schedule for a public education outreach program that promotes proper disposal of FOG;

(b) A plan and schedule for the disposal of FOG generated within the sanitary sewer system service area. This may include a list of acceptable disposal facilities and/or additional facilities needed to adequately dispose of FOG generated within a sanitary sewer system service area;

(c) The legal authority to prohibit discharges to the system and identify measures to prevent SSOs and blockages caused by FOG;

(d) Requirements to install grease removal devices (such as traps or interceptors), design standards for the removal devices, maintenance requirements, BMP requirements, record keeping and reporting requirements;

(e) Authority to inspect grease producing facilities, enforcement authorities, and whether the Enrollee has sufficient staff to inspect and enforce the FOG ordinance;

(f) An identification of sanitary sewer system sections subject to FOG blockages and establishment of a cleaning maintenance schedule for each section; and

(g) Development and implementation of source control measures for all sources of FOG discharged to the sanitary sewer system for each section identified in (f) above.

(viii) **System Evaluation and Capacity Assurance Plan**: The Enrollee shall prepare and implement a capital improvement plan (CIP) that will provide hydraulic capacity of key sanitary sewer system elements for dry weather peak flow conditions, as well as the appropriate design storm or wet weather event. At a minimum, the plan must include:

(a) **Evaluation**: Actions needed to evaluate those portions of the sanitary sewer system that are experiencing or contributing to an SSO discharge caused by hydraulic deficiency. The evaluation must provide estimates of peak flows (including flows from SSOs

that escape from the system) associated with conditions similar to those causing overflow events, estimates of the capacity of key system components, hydraulic deficiencies (including components of the system with limiting capacity) and the major sources that contribute to the peak flows associated with overflow events;

(b) **Design Criteria:** Where design criteria do not exist or are deficient, undertake the evaluation identified in (a) above to establish appropriate design criteria; and

(c) **Capacity Enhancement Measures:** The steps needed to establish a short- and long-term CIP to address identified hydraulic deficiencies, including prioritization, alternatives analysis, and schedules. The CIP may include increases in pipe size, I/I reduction programs, increases and redundancy in pumping capacity, and storage facilities. The CIP shall include an implementation schedule and shall identify sources of funding.

(d) **Schedule:** The Enrollee shall develop a schedule of completion dates for all portions of the capital improvement program developed in (a)-(c) above. This schedule shall be reviewed and updated consistent with the SSMP review and update requirements as described in Section D. 14.

(ix) **Monitoring, Measurement, and Program Modifications:** The Enrollee shall:

(a) Maintain relevant information that can be used to establish and prioritize appropriate SSMP activities;

(b) Monitor the implementation and, where appropriate, measure the effectiveness of each element of the SSMP;

(c) Assess the success of the preventative maintenance program;

(d) Update program elements, as appropriate, based on monitoring or performance evaluations; and

(e) Identify and illustrate SSO trends, including: frequency, location, and volume.

(x) **SSMP Program Audits** - As part of the SSMP, the Enrollee shall conduct periodic internal audits, appropriate to the size of the system and the number of SSOs. At a minimum, these audits must occur every two years and a report must be prepared and kept on file. This audit shall focus on evaluating the effectiveness of the SSMP and the

Enrollee's compliance with the SSMP requirements identified in this subsection (D.13), including identification of any deficiencies in the SSMP and steps to correct them.

(xi) **Communication Program** – The Enrollee shall communicate on a regular basis with the public on the development, implementation, and performance of its SSMP. The communication system shall provide the public the opportunity to provide input to the Enrollee as the program is developed and implemented.

The Enrollee shall also create a plan of communication with systems that are tributary and/or satellite to the Enrollee's sanitary sewer system.

14. Both the SSMP and the Enrollee's program to implement the SSMP must be certified by the Enrollee to be in compliance with the requirements set forth above and must be presented to the Enrollee's governing board for approval at a public meeting. The Enrollee shall certify that the SSMP, and subparts thereof, are in compliance with the general WDRs within the time frames identified in the time schedule provided in subsection D.15, below.

    In order to complete this certification, the Enrollee's authorized representative must complete the certification portion in the Online SSO Database Questionnaire by checking the appropriate milestone box, printing and signing the automated form, and sending the form to:

    State Water Resources Control Board
    Division of Water Quality
    Attn: SSO Program Manager
    P.O. Box 100
    Sacramento, CA 95812

    The SSMP must be updated every five (5) years, and must include any significant program changes. Re-certification by the governing board of the Enrollee is required in accordance with D.14 when significant updates to the SSMP are made. To complete the re-certification process, the Enrollee shall enter the data in the Online SSO Database and mail the form to the State Water Board, as described above.

15. The Enrollee shall comply with these requirements according to the following schedule. This time schedule does not supersede existing requirements or time schedules associated with other permits or regulatory requirements.

Sewer System Management Plan Time Schedule

<table>
<tr><td>Task and Associated Section</td><td colspan="4">Completion Date</td></tr>
<tr><td></td><td>Population > 100,000</td><td>Population between 100,000 and 10,000</td><td>Population between 10,000 and 2,500</td><td>Population < 2,500</td></tr>
<tr><td>Application for Permit Coverage
Section C</td><td colspan="4">6 months after WDRs Adoption</td></tr>
<tr><td>Reporting Program
Section G</td><td colspan="4">6 months after WDRs Adoption[1]</td></tr>
<tr><td>SSMP Development Plan and Schedule
No specific Section</td><td>9 months after WDRs Adoption[2]</td><td>12 months after WDRs Adoption[2]</td><td>15 months after WDRs Adoption[2]</td><td>18 months after WDRs Adoption[2]</td></tr>
<tr><td>Goals and Organization Structure
Section D 13 (i) & (ii)</td><td colspan="2">12 months after WDRs Adoption[2]</td><td colspan="2">18 months after WDRs Adoption[2]</td></tr>
<tr><td>Overflow Emergency Response Program
Section D 13 (vi)</td><td rowspan="3">24 months after WDRs Adoption[2]</td><td rowspan="3">30 months after WDRs Adoption[2]</td><td rowspan="3">36 months after WDRs Adoption[2]</td><td rowspan="3">39 months after WDRs Adoption[2]</td></tr>
<tr><td>Legal Authority
Section D 13 (iii)</td></tr>
<tr><td>Operation and Maintenance Program
Section D 13 (iv)</td></tr>
<tr><td>Grease Control Program
Section D 13 (vii)</td><td rowspan="3">36 months after WDRs Adoption</td><td rowspan="3">39 months after WDRs Adoption</td><td rowspan="3">48 months after WDRs Adoption</td><td rowspan="3">51 months after WDRs Adoption</td></tr>
<tr><td>Design and Performance
Section D 13 (v)</td></tr>
<tr><td>System Evaluation and Capacity Assurance Plan
Section D 13 (viii)</td></tr>
<tr><td>Final SSMP, incorporating all of the SSMP requirements
Section D 13</td><td></td><td></td><td></td><td></td></tr>
</table>

1. In the event that by July 1, 2006 the Executive Director is able to execute a memorandum of agreement (MOA) with the California Water Environment Association (CWEA) or discharger representatives outlining a strategy and time schedule for CWEA or another entity to provide statewide training on the adopted monitoring program, SSO database electronic reporting, and SSMP development, consistent with this Order, then the schedule of Reporting Program Section G shall be replaced with the following schedule:

Reporting Program ***Section G***	
Regional Boards 4, 8, and 9	8 months after WDRs Adoption
Regional Boards 1, 2, and 3	12 months after WDRs Adoption
Regional Boards 5, 6, and 7	16 months after WDRs Adoption

If this MOU is not executed by July 1, 2006, the reporting program time schedule will remain six (6) months for all regions and agency size categories.

2. In the event that the Executive Director executes the MOA identified in note 1 by July 1, 2006, then the deadline for this task shall be extended by six (6) months. The time schedule identified in the MOA must be consistent with the extended time schedule provided by this note. If the MOA is not executed by July 1, 2006, the six (6) month time extension will not be granted.

E. WDRs and SSMP AVAILABILITY

1. A copy of the general WDRs and the certified SSMP shall be maintained at appropriate locations (such as the Enrollee's offices, facilities, and/or Internet homepage) and shall be available to sanitary sewer system operating and maintenance personnel at all times.

F. ENTRY AND INSPECTION

1. The Enrollee shall allow the State or Regional Water Boards or their authorized representative, upon presentation of credentials and other documents as may be required by law, to:

    a. Enter upon the Enrollee's premises where a regulated facility or activity is located or conducted, or where records are kept under the conditions of this Order;

    b. Have access to and copy, at reasonable times, any records that must be kept under the conditions of this Order;

c. Inspect at reasonable times any facilities, equipment (including monitoring and control equipment), practices, or operations regulated or required under this Order; and

d. Sample or monitor at reasonable times, for the purposes of assuring compliance with this Order or as otherwise authorized by the California Water Code, any substances or parameters at any location.

G. GENERAL MONITORING AND REPORTING REQUIREMENTS

1. The Enrollee shall furnish to the State or Regional Water Board, within a reasonable time, any information that the State or Regional Water Board may request to determine whether cause exists for modifying, revoking and reissuing, or terminating this Order. The Enrollee shall also furnish to the Executive Director of the State Water Board or Executive Officer of the applicable Regional Water Board, upon request, copies of records required to be kept by this Order.

2. The Enrollee shall comply with the attached Monitoring and Reporting Program No. 2006-0003 and future revisions thereto, as specified by the Executive Director. Monitoring results shall be reported at the intervals specified in Monitoring and Reporting Program No. 2006-0003. Unless superseded by a specific enforcement Order for a specific Enrollee, these reporting requirements are intended to replace other mandatory routine written reports associated with SSOs.

3. All Enrollees must obtain SSO Database accounts and receive a “Username” and “Password” by registering through the California Integrated Water Quality System (CIWQS). These accounts will allow controlled and secure entry into the SSO Database. Additionally, within 30days of receiving an account and prior to recording spills into the SSO Database, all Enrollees must complete the “Collection System Questionnaire”, which collects pertinent information regarding a Enrollee’s collection system. The “Collection System Questionnaire” must be updated at least every 12 months.

4. Pursuant to Health and Safety Code section 5411.5, any person who, without regard to intent or negligence, causes or permits any untreated wastewater or other waste to be discharged in or on any waters of the State, or discharged in or deposited where it is, or probably will be, discharged in or on any surface waters of the State, as soon as that person has knowledge of the discharge, shall immediately notify the local health officer of the discharge. Discharges of untreated or partially treated wastewater to storm drains and drainage channels, whether man-made or natural or concrete-lined, shall be reported as required above.

   Any SSO greater than 1,000 gallons discharged in or on any waters of the State, or discharged in or deposited where it is, or probably will be, discharged in or on any surface waters of the State shall also be reported to the Office of Emergency Services pursuant to California Water Code section 13271.

H. CHANGE IN OWNERSHIP

1. This Order is not transferable to any person or party, except after notice to the Executive Director. The Enrollee shall submit this notice in writing at least 30 days in advance of any proposed transfer. The notice must include a written agreement between the existing and new Enrollee containing a specific date for the transfer of this Order's responsibility and coverage between the existing Enrollee and the new Enrollee. This agreement shall include an acknowledgement that the existing Enrollee is liable for violations up to the transfer date and that the new Enrollee is liable from the transfer date forward.

I. INCOMPLETE REPORTS

1. If an Enrollee becomes aware that it failed to submit any relevant facts in any report required under this Order, the Enrollee shall promptly submit such facts or information by formally amending the report in the Online SSO Database.

J. REPORT DECLARATION

1. All applications, reports, or information shall be signed and certified as follows:

    (i) All reports required by this Order and other information required by the State or Regional Water Board shall be signed and certified by a person designated, for a municipality, state, federal or other public agency, as either a principal executive officer or ranking elected official, or by a duly authorized representative of that person, as described in paragraph (ii) of this provision. (For purposes of electronic reporting, an electronic signature and accompanying certification, which is in compliance with the Online SSO database procedures, meet this certification requirement.)

    (ii) An individual is a duly authorized representative only if:

        (a) The authorization is made in writing by a person described in paragraph (i) of this provision; and

        (b) The authorization specifies either an individual or a position having responsibility for the overall operation of the regulated facility or activity.

K. CIVIL MONETARY REMEDIES FOR DISCHARGE VIOLATIONS

1. The California Water Code provides various enforcement options, including civil monetary remedies, for violations of this Order.

2. The California Water Code also provides that any person failing or refusing to furnish technical or monitoring program reports, as required under this Order, or

falsifying any information provided in the technical or monitoring reports is subject to civil monetary penalties.

L. SEVERABILITY

1. The provisions of this Order are severable, and if any provision of this Order, or the application of any provision of this Order to any circumstance, is held invalid, the application of such provision to other circumstances, and the remainder of this Order, shall not be affected thereby.

2. This order does not convey any property rights of any sort or any exclusive privileges. The requirements prescribed herein do not authorize the commission of any act causing injury to persons or property, nor protect the Enrollee from liability under federal, state or local laws, nor create a vested right for the Enrollee to continue the waste discharge.

CERTIFICATION

The undersigned Clerk to the State Water Board does hereby certify that the foregoing is a full, true, and correct copy of general WDRs duly and regularly adopted at a meeting of the State Water Resources Control Board held on May 2, 2006.

AYE: Tam M. Doduc
Gerald D. Secundy

NO: Arthur G. Baggett

ABSENT: None

ABSTAIN: None



Song Her
Clerk to the Board

Appendix A-2

State Water Resources Control Board Order No. WQ 2013-0058-EXEC

STATE OF CALIFORNIA
WATER RESOURCES CONTROL BOARD
ORDER NO. WQ 2013-0058-EXEC

AMENDING MONITORING AND REPORTING PROGRAM
FOR
STATEWIDE GENERAL WASTE DISCHARGE REQUIREMENTS FOR
SANITARY SEWER SYSTEMS

The State of California, Water Resources Control Board (hereafter State Water Board) finds:

1. The State Water Board is authorized to prescribe statewide general Waste Discharge Requirements (WDRs) for categories of discharges that involve the same or similar operations and the same or similar types of waste pursuant to Water Code section 13263(i).

2. Water Code section 13193 *et seq.* requires the Regional Water Quality Control Boards (Regional Water Boards) and the State Water Board (collectively, the Water Boards) to gather Sanitary Sewer Overflow (SSO) information and make this information available to the public, including but not limited to, SSO cause, estimated volume, location, date, time, duration, whether or not the SSO reached or may have reached waters of the state, response and corrective action taken, and an enrollee's contact information for each SSO event. An enrollee is defined as the public entity having legal authority over the operation and maintenance of, or capital improvements to, a sanitary sewer system greater than one mile in length.

3. Water Code section 13271, *et seq.* requires notification to the California Office of Emergency Services (Cal OES), formerly the California Emergency Management Agency, for certain unauthorized discharges, including SSOs.

4. On May 2, 2006, the State Water Board adopted Order 2006-0003-DWQ, "Statewide Waste Discharge Requirements for Sanitary Sewer Systems"[1] (hereafter SSS WDRs) to comply with Water Code section 13193 and to establish the framework for the statewide SSO Reduction Program.

5. Subsection G.2 of the SSS WDRs and the Monitoring and Reporting Program (MRP) provide that the Executive Director may modify the terms of the MRP at any time.

6. On February 20, 2008, the State Water Board Executive Director adopted a revised MRP for the SSS WDRs to rectify early notification deficiencies and ensure that first responders are notified in a timely manner of SSOs discharged into waters of the state.

7. When notified of an SSO that reaches a drainage channel or surface water of the state, Cal OES, pursuant to Water Code section 13271(a)(3), forwards the SSO notification information[2] to local government agencies and first responders including local public health officials and the applicable Regional Water Board. Receipt of notifications for a single SSO event from both the SSO reporter

---

[1] Available for download at:
http://www.waterboards.ca.gov/board_decisions/adopted_orders/water_quality/2006/wqo/wqo2006_0003.pdf

[2] Cal OES Hazardous Materials Spill Reports available Online at:
http://w3.calema.ca.gov/operational/malhaz.nsf/$defaultview and http://w3.calema.ca.gov/operational/malhaz.nsf

and Cal OES is duplicative. To address this, the SSO notification requirements added by the February 20, 2008 MRP revision are being removed in this MRP revision.

8. In the February 28, 2008 Memorandum of Agreement between the State Water Board and the California Water and Environment Association (CWEA), the State Water Board committed to re-designing the CIWQS[3] Online SSO Database to allow "event" based SSO reporting versus the original "location" based reporting. Revisions to this MRP and accompanying changes to the CIWQS Online SSO Database will implement this change by allowing for multiple SSO appearance points to be associated with each SSO event caused by a single asset failure.

9. Based on stakeholder input and Water Board staff experience implementing the SSO Reduction Program, SSO categories have been revised in this MRP. In the prior version of the MRP, SSOs have been categorized as Category 1 or Category 2. This MRP implements changes to SSO categories by adding a Category 3 SSO type. This change will improve data management to further assist Water Board staff with evaluation of high threat and low threat SSOs by placing them in unique categories (i.e., Category 1 and Category 3, respectively). This change will also assist enrollees in identifying SSOs that require Cal OES notification.

10. Based on over six years of implementation of the SSS WDRs, the State Water Board concludes that the February 20, 2008 MRP must be updated to better advance the SSO Reduction Program[4] objectives, assess compliance, and enforce the requirements of the SSS WDRs.

IT IS HEREBY ORDERED THAT:

Pursuant to the authority delegated by Water Code section 13267(f), Resolution 2002-0104, and Order 2006-0003-DWQ, the MRP for the SSS WDRs (Order 2006-0003-DWQ) is hereby amended as shown in Attachment A and shall be effective on September 9, 2013.

8/6/13
Date

Thomas Howard
Executive Director

[3] California Integrated Water Quality System (CIWQS) publicly available at http://www.waterboards.ca.gov/ciwqs/publicreports.shtml

[4] Statewide Sanitary Sewer Overflow Reduction Program information is available at: http://www.waterboards.ca.gov/water_issues/programs/sso/

ATTACHMENT A

STATE WATER RESOURCES CONTROL BOARD
ORDER NO. WQ 2013-0058-EXEC

AMENDING MONITORING AND REPORTING PROGRAM
FOR
STATEWIDE GENERAL WASTE DISCHARGE REQUIREMENTS FOR
SANITARY SEWER SYSTEMS

This Monitoring and Reporting Program (MRP) establishes monitoring, record keeping, reporting and public notification requirements for Order 2006-0003-DWQ, "Statewide General Waste Discharge Requirements for Sanitary Sewer Systems" (SSS WDRs). This MRP shall be effective from September 9, 2013 until it is rescinded. The Executive Director may make revisions to this MRP at any time. These revisions may include a reduction or increase in the monitoring and reporting requirements. All site specific records and data developed pursuant to the SSS WDRs and this MRP shall be complete, accurate, and justified by evidence maintained by the enrollee. Failure to comply with this MRP may subject an enrollee to civil liabilities of up to $5,000 a day per violation pursuant to Water Code section 13350; up to $1,000 a day per violation pursuant to Water Code section 13268; or referral to the Attorney General for judicial civil enforcement. The State Water Resources Control Board (State Water Board) reserves the right to take any further enforcement action authorized by law.

A. SUMMARY OF MRP REQUIREMENTS

Table 1 – Spill Categories and Definitions

CATEGORIES	DEFINITIONS [see Section A on page 5 of Order 2006-0003-DWQ, for Sanitary Sewer Overflow (SSO) definition]
CATEGORY 1	Discharges of untreated or partially treated wastewater of **any volume** resulting from an enrollee's sanitary sewer system failure or flow condition that: • Reach surface water and/or reach a drainage channel tributary to a surface water; or • Reach a Municipal Separate Storm Sewer System (MS4) and are not fully captured and returned to the sanitary sewer system or not otherwise captured and disposed of properly. Any volume of wastewater not recovered from the MS4 is considered to have reached surface water unless the storm drain system discharges to a dedicated storm water or groundwater infiltration basin (e.g., infiltration pit, percolation pond).
CATEGORY 2	Discharges of untreated or partially treated wastewater of **1,000 gallons or greater** resulting from an enrollee's sanitary sewer system failure or flow condition that **do not** reach surface water, a drainage channel, or a MS4 unless the entire SSO discharged to the storm drain system is fully recovered and disposed of properly.
CATEGORY 3	All other discharges of untreated or partially treated wastewater resulting from an enrollee's sanitary sewer system failure or flow condition.
PRIVATE LATERAL SEWAGE DISCHARGE (PLSD)	Discharges of untreated or partially treated wastewater resulting from blockages or other problems **within a privately owned sewer lateral** connected to the enrollee's sanitary sewer system or from other private sewer assets. PLSDs that the enrollee becomes aware of may be voluntarily reported to the California Integrated Water Quality System (CIWQS) Online SSO Database.

Table 2 – Notification, Reporting, Monitoring, and Record Keeping Requirements

ELEMENT	REQUIREMENT	METHOD
NOTIFICATION **(see section B of MRP)**	• Within two hours of becoming aware of any Category 1 SSO **greater than or equal to 1,000 gallons discharged to surface water or spilled in a location where it probably will be discharged to surface water**, notify the California Office of Emergency Services (Cal OES) and obtain a notification control number.	Call Cal OES at: **(800) 852-7550**
REPORTING **(see section C of MRP)**	• Category 1 SSO: Submit draft report within three business days of becoming aware of the SSO and certify within 15 calendar days of SSO end date. • Category 2 SSO: Submit draft report within 3 business days of becoming aware of the SSO and certify within 15 calendar days of the SSO end date. • Category 3 SSO: Submit certified report within 30 calendar days of the end of month in which SSO the occurred. • SSO Technical Report: Submit within 45 calendar days after the end date of any Category 1 SSO in which 50,000 gallons or greater are spilled to surface waters. • "No Spill" Certification: Certify that no SSOs occurred within 30 calendar days of the end of the month or, if reporting quarterly, the quarter in which no SSOs occurred. • Collection System Questionnaire: Update and certify every 12 months.	Enter data into the CIWQS Online SSO Database (http://ciwqs.waterboards.ca.gov/), certified by enrollee's Legally Responsible Official(s).
WATER QUALITY MONITORING **(see section D of MRP)**	• Conduct water quality sampling **within 48 hours** after initial SSO notification for Category 1 SSOs in which 50,000 gallons or greater are spilled to surface waters.	Water quality results are required to be uploaded into CIWQS for Category 1 SSOs in which 50,000 gallons or greater are spilled to surface waters.
RECORD KEEPING **(see section E of MRP)**	• SSO event records. • Records documenting Sanitary Sewer Management Plan (SSMP) implementation and changes/updates to the SSMP. • Records to document Water Quality Monitoring for SSOs of 50,000 gallons or greater spilled to surface waters. • Collection system telemetry records if relied upon to document and/or estimate SSO Volume.	Self-maintained records shall be available during inspections or upon request.

B. NOTIFICATION REQUIREMENTS

Although Regional Water Quality Control Boards (Regional Water Boards) and the State Water Board (collectively, the Water Boards) staff do not have duties as first responders, this MRP is an appropriate mechanism to ensure that the agencies that have first responder duties are notified in a timely manner in order to protect public health and beneficial uses.

1. For any Category 1 SSO greater than or equal to 1,000 gallons that results in a discharge to a surface water or spilled in a location where it probably will be discharged to surface water, either directly or by way of a drainage channel or MS4, the enrollee shall, as soon as possible, but not later than two (2) hours after (A) the enrollee has knowledge of the discharge, (B) notification is possible, and (C) notification can be provided without substantially impeding cleanup or other emergency measures, notify the Cal OES and obtain a notification control number.

2. To satisfy notification requirements for each applicable SSO, the enrollee shall provide the information requested by Cal OES before receiving a control number. Spill information requested by Cal OES may include:

    i. Name of person notifying Cal OES and direct return phone number.
    ii. Estimated SSO volume discharged (gallons).
    iii. If ongoing, estimated SSO discharge rate (gallons per minute).
    iv. SSO Incident Description:
        a. Brief narrative.
        b. On-scene point of contact for additional information (name and cell phone number).
        c. Date and time enrollee became aware of the SSO.
        d. Name of sanitary sewer system agency causing the SSO.
        e. SSO cause (if known).
    v. Indication of whether the SSO has been contained.
    vi. Indication of whether surface water is impacted.
    vii. Name of surface water impacted by the SSO, if applicable.
    viii. Indication of whether a drinking water supply is or may be impacted by the SSO.
    ix. Any other known SSO impacts.
    x. SSO incident location (address, city, state, and zip code).

3. Following the initial notification to Cal OES and until such time that an enrollee certifies the SSO report in the CIWQS Online SSO Database, the enrollee shall provide updates to Cal OES regarding substantial changes to the estimated volume of untreated or partially treated sewage discharged and any substantial change(s) to known impact(s).

4. PLSDs: The enrollee is strongly encouraged to notify Cal OES of discharges greater than or equal to 1,000 gallons of untreated or partially treated wastewater that result or may result in a discharge to surface water resulting from failures or flow conditions within a privately owned sewer lateral or from other private sewer asset(s) if the enrollee becomes aware of the PLSD.

C. REPORTING REQUIREMENTS

1. **CIWQS Online SSO Database Account:** All enrollees shall obtain a CIWQS Online SSO Database account and receive a "Username" and "Password" by registering through CIWQS. These accounts allow controlled and secure entry into the CIWQS Online SSO Database.

2. **SSO Mandatory Reporting Information:** For reporting purposes, if one SSO event results in multiple appearance points in a sewer system asset, the enrollee shall complete one SSO report in the CIWQS Online SSO Database which includes the GPS coordinates for the location of the SSO appearance point closest to the failure point, blockage or location of the flow condition that caused the SSO, and provide descriptions of the locations of all other discharge points associated with the SSO event.

3. **SSO Categories**

   i. **Category 1** – Discharges of untreated or partially treated wastewater of any volume resulting from an enrollee's sanitary sewer system failure or flow condition that:

      a. Reach surface water and/or reach a drainage channel tributary to a surface water; or

      b. Reach a MS4 and are not fully captured and returned to the sanitary sewer system or not otherwise captured and disposed of properly. Any volume of wastewater not recovered from the MS4 is considered to have reached surface water unless the storm drain system discharges to a dedicated storm water or groundwater infiltration basin (e.g., infiltration pit, percolation pond).

   ii. **Category 2** – Discharges of untreated or partially treated wastewater greater than or equal to 1,000 gallons resulting from an enrollee's sanitary sewer system failure or flow condition that does not reach a surface water, a drainage channel, or the MS4 unless the entire SSO volume discharged to the storm drain system is fully recovered and disposed of properly.

   iii. **Category 3** – All other discharges of untreated or partially treated wastewater resulting from an enrollee's sanitary sewer system failure or flow condition.

4. **Sanitary Sewer Overflow Reporting to CIWQS - Timeframes**

   i. **Category 1 and Category 2 SSOs** – All SSOs that meet the above criteria for Category 1 or Category 2 SSOs shall be reported to the CIWQS Online SSO Database:

      a. Draft reports for Category 1 and Category 2 SSOs shall be submitted to the CIWQS Online SSO Database within three (3) business days of the enrollee becoming aware of the SSO. Minimum information that shall be reported in a draft Category 1 SSO report shall include all information identified in section 8.i.a. below. Minimum information that shall be reported in a Category 2 SSO draft report shall include all information identified in section 8.i.c below.

      b. A final Category 1 or Category 2 SSO report shall be certified through the CIWQS Online SSO Database within 15 calendar days of the end date of the SSO. Minimum information that shall be certified in the final Category 1 SSO report shall include all information identified in section 8.i.b below. Minimum information that shall be certified in a final Category 2 SSO report shall include all information identified in section 8.i.d below.

ii. **Category 3 SSOs** – All SSOs that meet the above criteria for Category 3 SSOs shall be reported to the CIWQS Online SSO Database and certified within 30 calendar days after the end of the calendar month in which the SSO occurs (e.g., all Category 3 SSOs occurring in the month of February shall be entered into the database and certified by March 30). Minimum information that shall be certified in a final Category 3 SSO report shall include all information identified in section 8.i.e below.

iii. **"No Spill" Certification** – If there are no SSOs during the calendar month, the enrollee shall either 1) certify, within 30 calendar days after the end of each calendar month, a "No Spill" certification statement in the CIWQS Online SSO Database certifying that there were no SSOs for the designated month, or 2) certify, quarterly within 30 calendar days after the end of each quarter, "No Spill" certification statements in the CIWQS Online SSO Database certifying that there were no SSOs for each month in the quarter being reported on. For quarterly reporting, the quarters are Q1 - January/ February/ March, Q2 - April/May/June, Q3 - July/August/September, and Q4 - October/November/December.

If there are no SSOs during a calendar month but the enrollee reported a PLSD, the enrollee shall still certify a "No Spill" certification statement for that month.

iv. **Amended SSO Reports** – The enrollee may update or add additional information to a certified SSO report within 120 calendar days after the SSO end date by amending the report or by adding an attachment to the SSO report in the CIWQS Online SSO Database. SSO reports certified in the CIWQS Online SSO Database prior to the adoption date of this MRP may only be amended up to 120 days after the effective date of this MRP. After 120 days, the enrollee may contact the SSO Program Manager to request to amend an SSO report if the enrollee also submits justification for why the additional information was not available prior to the end of the 120 days.

5. **SSO Technical Report**

The enrollee shall submit an SSO Technical Report in the CIWQS Online SSO Database within 45 calendar days of the SSO end date for any SSO in which 50,000 gallons or greater are spilled to surface waters. This report, which does not preclude the Water Boards from requiring more detailed analyses if requested, shall include at a minimum, the following:

i. **Causes and Circumstances of the SSO:**

a. Complete and detailed explanation of how and when the SSO was discovered.

b. Diagram showing the SSO failure point, appearance point(s), and final destination(s).

c. Detailed description of the methodology employed and available data used to calculate the volume of the SSO and, if applicable, the SSO volume recovered.

d. Detailed description of the cause(s) of the SSO.

e. Copies of original field crew records used to document the SSO.

f. Historical maintenance records for the failure location.

ii. **Enrollee's Response to SSO:**

a. Chronological narrative description of all actions taken by enrollee to terminate the spill.

b. Explanation of how the SSMP Overflow Emergency Response plan was implemented to respond to and mitigate the SSO.

c. Final corrective action(s) completed and/or planned to be completed, including a schedule for actions not yet completed.

iii. **Water Quality Monitoring:**

a. Description of all water quality sampling activities conducted including analytical results and evaluation of the results.

b. Detailed location map illustrating all water quality sampling points.

6. **PLSDs**

Discharges of untreated or partially treated wastewater resulting from blockages or other problems within a privately owned sewer lateral connected to the enrollee's sanitary sewer system or from other private sanitary sewer system assets may be voluntarily reported to the CIWQS Online SSO Database.

i. The enrollee is also encouraged to provide notification to Cal OES per section B above when a PLSD greater than or equal to 1,000 gallons has or may result in a discharge to surface water. For any PLSD greater than or equal to 1,000 gallons regardless of the spill destination, the enrollee is also encouraged to file a spill report as required by Health and Safety Code section 5410 et. seq. and Water Code section 13271, or notify the responsible party that notification and reporting should be completed as specified above and required by State law.

ii. If a PLSD is recorded in the CIWQS Online SSO Database, the enrollee must identify the sewage discharge as occurring and caused by a private sanitary sewer system asset and should identify a responsible party (other than the enrollee), if known. Certification of PLSD reports by enrollees is not required.

7. **CIWQS Online SSO Database Unavailability**

In the event that the CIWQS Online SSO Database is not available, the enrollee must fax or e-mail all required information to the appropriate Regional Water Board office in accordance with the time schedules identified herein. In such event, the enrollee must also enter all required information into the CIWQS Online SSO Database when the database becomes available.

8. **Mandatory Information to be Included in CIWQS Online SSO Reporting**

All enrollees shall obtain a CIWQS Online SSO Database account and receive a "Username" and "Password" by registering through CIWQS which can be reached at CIWQS@waterboards.ca.gov or by calling (866) 792-4977, M-F, 8 A.M. to 5 P.M. These accounts will allow controlled and secure entry into the CIWQS Online SSO Database. Additionally, within thirty (30) days of initial enrollment and prior to recording SSOs into the CIWQS Online SSO Database, all enrollees must complete a Collection System Questionnaire (Questionnaire). The Questionnaire shall be updated at least once every 12 months.

i. **SSO Reports**

At a minimum, the following mandatory information shall be reported prior to finalizing and certifying an SSO report for each category of SSO:

a. **Draft Category 1 SSOs**: At a minimum, the following mandatory information shall be reported for a draft Category 1 SSO report:

1. SSO Contact Information: Name and telephone number of enrollee contact person who can answer specific questions about the SSO being reported.
2. SSO Location Name.
3. Location of the overflow event (SSO) by entering GPS coordinates. If a single overflow event results in multiple appearance points, provide GPS coordinates for the appearance point closest to the failure point and describe each additional appearance point in the SSO appearance point explanation field.
4. Whether or not the SSO reached surface water, a drainage channel, or entered and was discharged from a drainage structure.
5. Whether or not the SSO reached a municipal separate storm drain system.
6. Whether or not the total SSO volume that reached a municipal separate storm drain system was fully recovered.
7. Estimate of the SSO volume, inclusive of all discharge point(s).
8. Estimate of the SSO volume that reached surface water, a drainage channel, or was not recovered from a storm drain.
9. Estimate of the SSO volume recovered (if applicable).
10. Number of SSO appearance point(s).
11. Description and location of SSO appearance point(s). If a single sanitary sewer system failure results in multiple SSO appearance points, each appearance point must be described.
12. SSO start date and time.
13. Date and time the enrollee was notified of, or self-discovered, the SSO.
14. Estimated operator arrival time.
15. For spills greater than or equal to 1,000 gallons, the date and time Cal OES was called.
16. For spills greater than or equal to 1,000 gallons, the Cal OES control number.

b. **Certified Category 1 SSOs**: At a minimum, the following mandatory information shall be reported for a certified Category 1 SSO report, in addition to all fields in section 8.i.a :

1. Description of SSO destination(s).
2. SSO end date and time.
3. SSO causes (mainline blockage, roots, etc.).
4. SSO failure point (main, lateral, etc.).
5. Whether or not the spill was associated with a storm event.
6. Description of spill corrective action, including steps planned or taken to reduce, eliminate, and prevent reoccurrence of the overflow; and a schedule of major milestones for those steps.
7. Description of spill response activities.
8. Spill response completion date.
9. Whether or not there is an ongoing investigation, the reasons for the investigation and the expected date of completion.

10. Whether or not a beach closure occurred or may have occurred as a result of the SSO.
11. Whether or not health warnings were posted as a result of the SSO.
12. Name of beach(es) closed and/or impacted. If no beach was impacted, NA shall be selected.
13. Name of surface water(s) impacted.
14. If water quality samples were collected, identify parameters the water quality samples were analyzed for. If no samples were taken, NA shall be selected.
15. If water quality samples were taken, identify which regulatory agencies received sample results (if applicable). If no samples were taken, NA shall be selected.
16. Description of methodology(ies) and type of data relied upon for estimations of the SSO volume discharged and recovered.
17. SSO Certification: Upon SSO Certification, the CIWQS Online SSO Database will issue a final SSO identification (ID) number.

c. **Draft Category 2 SSOs**: At a minimum, the following mandatory information shall be reported for a draft Category 2 SSO report:

1. Items 1-14 in section 8.i.a above for Draft Category 1 SSO.

d. **Certified Category 2 SSOs**: At a minimum, the following mandatory information shall be reported for a certified Category 2 SSO report:

1. Items 1-14 in section 8.i.a above for Draft Category 1 SSO and Items 1-9, and 17 in section 8.i.b above for Certified Category 1 SSO.

e. **Certified Category 3 SSOs**: At a minimum, the following mandatory information shall be reported for a certified Category 3 SSO report:

1. Items 1-14 in section 8.i.a above for Draft Category 1 SSO and Items 1-5, and 17 in section 8.i.b above for Certified Category 1 SSO.

ii. **Reporting SSOs to Other Regulatory Agencies**

These reporting requirements do not preclude an enrollee from reporting SSOs to other regulatory agencies pursuant to state law. In addition, these reporting requirements do not replace other Regional Water Board notification and reporting requirements for SSOs.

iii. **Collection System Questionnaire**

The required Questionnaire (see subsection G of the SSS WDRs) provides the Water Boards with site-specific information related to the enrollee's sanitary sewer system. The enrollee shall complete and certify the Questionnaire at least every 12 months to facilitate program implementation, compliance assessment, and enforcement response.

iv. **SSMP Availability**

The enrollee shall provide the publicly available internet web site address to the CIWQS Online SSO Database where a downloadable copy of the enrollee's approved SSMP, critical supporting documents referenced in the SSMP, and proof of local governing board approval of the SSMP is posted. If all of the SSMP documentation listed in this subsection is not publicly available on the Internet, the enrollee shall comply with the following procedure:

a. Submit an **electronic** copy of the enrollee's approved SSMP, critical supporting documents referenced in the SSMP, and proof of local governing board approval of the SSMP to the State Water Board, within 30 days of that approval and within 30 days of any subsequent SSMP re-certifications, to the following mailing address:

State Water Resources Control Board
Division of Water Quality
Attn: SSO Program Manager
1001 I Street, 15th Floor, Sacramento, CA 95814

D. WATER QUALITY MONITORING REQUIREMENTS:

To comply with subsection D.7(v) of the SSS WDRs, the enrollee shall develop and implement an SSO Water Quality Monitoring Program to assess impacts from SSOs to surface waters in which 50,000 gallons or greater are spilled to surface waters. The SSO Water Quality Monitoring Program, shall, at a minimum:

1. Contain protocols for water quality monitoring.

2. Account for spill travel time in the surface water and scenarios where monitoring may not be possible (e.g. safety, access restrictions, etc.).

3. Require water quality analyses for ammonia and bacterial indicators to be performed by an accredited or certified laboratory.

4. Require monitoring instruments and devices used to implement the SSO Water Quality Monitoring Program to be properly maintained and calibrated, including any records to document maintenance and calibration, as necessary, to ensure their continued accuracy.

5. Within 48 hours of the enrollee becoming aware of the SSO, require water quality sampling for, at a minimum, the following constituents:
   i. Ammonia
   ii. Appropriate Bacterial indicator(s) per the applicable Basin Plan water quality objective or Regional Board direction which may include total and fecal coliform, enterococcus, and e-coli.

E. RECORD KEEPING REQUIREMENTS:

The following records shall be maintained by the enrollee for a minimum of five (5) years and shall be made available for review by the Water Boards during an onsite inspection or through an information request:

1. General Records: The enrollee shall maintain records to document compliance with all provisions of the SSS WDRs and this MRP for each sanitary sewer system owned including any required records generated by an enrollee's sanitary sewer system contractor(s).

2. SSO Records: The enrollee shall maintain records for each SSO event, including but not limited to:
   i. Complaint records documenting how the enrollee responded to all notifications of possible or actual SSOs, both during and after business hours, including complaints that do not

result in SSOs. Each complaint record shall, at a minimum, include the following information:

a. Date, time, and method of notification.

b. Date and time the complainant or informant first noticed the SSO.

c. Narrative description of the complaint, including any information the caller can provide regarding whether or not the complainant or informant reporting the potential SSO knows if the SSO has reached surface waters, drainage channels or storm drains.

d. Follow-up return contact information for complainant or informant for each complaint received, if not reported anonymously.

e. Final resolution of the complaint.

ii. Records documenting steps and/or remedial actions undertaken by enrollee, using all available information, to comply with section D.7 of the SSS WDRs.

iii. Records documenting how all estimate(s) of volume(s) discharged and, if applicable, volume(s) recovered were calculated.

3. Records documenting all changes made to the SSMP since its last certification indicating when a subsection(s) of the SSMP was changed and/or updated and who authorized the change or update. These records shall be attached to the SSMP.

4. Electronic monitoring records relied upon for documenting SSO events and/or estimating the SSO volume discharged, including, but not limited to records from:

i. Supervisory Control and Data Acquisition (SCADA) systems

ii. Alarm system(s)

iii. Flow monitoring device(s) or other instrument(s) used to estimate wastewater levels, flow rates and/or volumes.

F. CERTIFICATION

1. All information required to be reported into the CIWQS Online SSO Database shall be certified by a person designated as described in subsection J of the SSS WDRs. This designated person is also known as a Legally Responsible Official (LRO). An enrollee may have more than one LRO.

2. Any designated person (i.e. an LRO) shall be registered with the State Water Board to certify reports in accordance with the CIWQS protocols for reporting.

3. Data Submitter (DS): Any enrollee employee or contractor may enter draft data into the CIWQS Online SSO Database on behalf of the enrollee if authorized by the LRO and registered with the State Water Board. However, only LROs may certify reports in CIWQS.

4. The enrollee shall maintain continuous coverage by an LRO. Any change of a registered LRO or DS (e.g., retired staff), including deactivation or a change to the LRO's or DS's contact information, shall be submitted by the enrollee to the State Water Board within 30 days of the change by calling (866) 792-4977 or e-mailing help@ciwqs.waterboards.ca.gov.

5. A registered designated person (i.e., an LRO) shall certify all required reports under penalty of perjury laws of the state as stated in the CIWQS Online SSO Database at the time of certification.

CERTIFICATION

The undersigned Clerk to the Board does hereby certify that the foregoing is a full, true, and correct copy of an order amended by the Executive Director of the State Water Resources Control Board.

7/30/13
Date

Jeanine Townsend
Clerk to the Board

Appendix B-1

Roles and Responsibilities

GARDEN GROVE SANITARY DISTRICT
ROLES AND RESPONSIBILITIES

A. RESPONSIBLE OFFICIAL

The Legally Responsible Official (LRO) who shall sign and certify the SSMP is the Water Services Manager, William E. Murray.

B. RESPONSIBILITIES FOR THE GGSD SSMP

City Manager:

- Establishes policy
- Allocates resources
- Delegates responsibility
- Oversees the preparation of the Sewer Enterprise Funding Plan for proper operation and maintenance of the collection system, and implementing the capital improvement plan

Director of Public Works:

- Provides adequate operation and maintenance of facilities and equipment through Water Services Manager
- Oversees the preparation and maintenance of an up to date map of the collection system, including the stormwater conveyance facilities
- Maintains relative information to establish and prioritize appropriate SSMP activities
- Oversees the system capacity evaluation, including urban runoff diversion to the sewer system during dry weather periods and control of infiltration and intrusion during both wet weather events and dry weather periods
- Oversees the preparation of Capacity Assurance Plan
- Oversees the inspection and condition assessment of the system to identify and prioritize structural deficiencies
- Participates in the preparation of the Sewer Enterprise Funding Plan
- Oversees the preparation of plans, specifications and estimates for the capital improvement projects, including rehabilitation and repair projects
- Reviews the Sanitary Sewer Overflow Report Form completed at the conclusion of a response to an SSO

Water Services Manager:

- Legally Responsible Official (LRO)
- Provides adequate operation and maintenance of facilities and equipment through Water Services Manager

- Oversees the preparation and maintenance of an up to date map of the collection system, including the stormwater conveyance facilities
- Maintains relative information to establish and prioritize appropriate SSMP activities
- Oversees the system capacity evaluation, including urban runoff diversion to the sewer system during dry weather periods and control of infiltration and intrusion during both wet weather events and dry weather periods
- Oversees the preparation of Capacity Assurance Plan
- Oversees the inspection and condition assessment of the system to identify and prioritize structural deficiencies
- Prepares and monitors the Sewer Enterprise budget and capital and replacement funds
- Oversees the preparation of plans, specifications and estimates for the capital improvement projects, including rehabilitation and repair projects
- Reviews the Sanitary Sewer Overflow Report Form completed at the conclusion of a response to an SSO
- Directs sewer operational guidelines
- Plan and direct short term and long term system improvements

District Engineer:

- Prepares the Capacity Assurance Plan
- Oversees the inspection and condition assessment of the system to identify and prioritize structural deficiencies
- Oversees the preparation of plans, specifications and estimates for the capital improvement projects, including rehabilitation and repair projects
- Assists in planning and directing short term and long term system improvements
- Oversees the system capacity evaluation, including urban runoff diversion to the sewer system during dry weather periods and control of infiltration and intrusion during both wet weather events and dry weather periods

GARDEN GROVE SANITARY DISTRICT
ROLES AND RESPONSIBILITIES

Supervisor:

- Direct sewer operational guidelines
- Prepare and monitor Sewer budget
- Prepare and monitor Sewer five year Capital and Replacement plan
- Control expenditures of Sewer funds
- Work on special projects as assigned
- Maintain records and documentation of incidents relating to safety
- Plan and direct short and long term personnel development and training by implementing goals, objectives, and performance standards
- Establish goals and objectives that coordinate with the mission/vision of the Division
- Coordinate with other staff to order materials and equipment
- Direct Sanitation Section operational guidelines
- Support and direct aspects and activities of Sanitation Section
- Oversee, supervise and provide managerial assistance in support of field crews in specific work sections
- Inspect emergency situation and informs personnel of problem
- Respond to situations reported by residents and City departments
- Perform necessary procedures to restore situations and request adequate assistance when necessary to restore situation
- Plan and conduct safety meetings
- Maintain records and documentation of incidents relating to safety
- Review files and train on Material Safety Data Sheets (MSDS)
- Oversee all new Sanitation projects
- Attend committee meetings
- Plan and organize all operational strategies
- Perform customer service activities in the field
- Review projects for utility input
- Review and update standards
- Attends developmental related meetings
- Coordinate and supervise construction of Sewer projects
- Review Capital projects for utility input

- Assists in the preparation of special events
- Oversee, supervise and provide managerial assistance in support of field crews in specific work sections
- Plan and implement goals, objectives, and performance standards for divisional sections; act on behalf of Public Works Division Manager during absence; and make presentations to City officials, public groups and staff
- Interview, select, train and evaluate the performance of employees
- Direct and plan the work of employees, including determining the techniques to be used by employees
- Set job performance standards for employees and ensure that standards are met
- Responsible for employee discipline when necessary
- Plan, review, and evaluate the work of crews engaged in a wide variety of maintenance activities; provide staff training and development; maintain a variety of records related to employee work activities
- Interpret and enforce safety provisions in accordance with City procedures, County, State, Federal, OSHA and related guidelines and regulations; and oversee field safety and/or hazardous materials programs
- Identify problems, obtain and analyze information to evaluate, determine and make recommendations for alternate courses of action to resolve problems
- Plan and implement maintenance schedules; estimate personnel, materials, and equipment requirements for section planning and budgeting
- Keep detailed manual and computerized records; gather and compile data; write a variety of technical, administrative, operational and maintenance reports; perform special projects; and procure supplies, equipment and facilities
- Provide on-site field tasks that include performing skilled labor as needed, making field computations, investigating and troubleshooting problems, inspecting contractual work to insure compliance, and reading and interpreting blue prints, maps and GIS system related information

Foreman:

- Plan and direct short and long term personnel development and training by implementing goals, objectives, and performance standards
- Coordinate with other staff to order materials and equipment
- Direct Sanitation Section operational guidelines
- Respond to situations reported by residents and City departments
- Perform necessary procedures to restore situations and request adequate assistance when necessary to restore situation
- Plan and conduct safety meetings
- Establish safety standards per OSHA guidelines
- Review files and Material Safety Data Sheets (MSDS)
- Maintain records and documentation of incidents relating to safety
- Attend committee meetings
- Supervise and direct personnel
- Support and direct aspects and activities of Sanitation Section
- Perform customer service activities in the field
- Fills in when crews are absent
- Work with other departments to complete public works projects
- Oversee, direct, and implement sewer operational guidelines
- Inspect lines to maintain proper conditions for sewer flow
- Inspect lift station pumps for proper operation
- Monitor and supervise progress and direction of the Roving Check Program and prepare data for presentation to other departments
- Supervise all aspects of lift station maintenance and reporting
- Perform maintenance and monitoring of the lift stations, filling in for crew when necessary
- Supervise and monitor the line cleaning, hot spot, and CCTV programs
- Log progress and prepare reports for section programs and responsibilities
- Write and prepare various reports to regulators per the WDR reporting guidelines
- Conduct physical examinations of manholes
- Supervise special projects such as manhole rehabilitation, lateral and main sewer line repairs, and other agencies' construction activities near City lines

- Coordinate with other agencies and contractors for marking sewer lines
- Provide hands-on supervisory assistance in support of field crews in specific work sections.
- Implement goals, objectives, and performance standards for deSignated work section
- Handle work orders by directing, assigning, supervIsing, overseeing, inspecting, evaluating and performing the work of assigned crew; participate in the selection of new employees; fill in for supervisor during absence
- Train personnel in use of equipment and methods of maintenance; provide input on evaluations; recommend and assist with follow-through of disciplinary actions when appropriate
- Interpret and enforce safety provisions in accordance with City procedures, County, State, Federal, OSHA and related guidelines and regulations.
- Operate a variety of light, medium and heavy construction and maintenance equipment and vehicles; operate a two-way radio; clean and maintain mechanical equipment, basic tools used on the job; perform minor maintenance on assigned equipment; respond to special requests and emergency calls during regular 'and off-hours as needed
- Drive, operate and inspect cars, trucks and a variety of power and automotive equipment
- Identify, research, obtain and analyze necessary information; determine and evaluate alternative approaches and courses of action; make recommendations to resolve problems both verbally and in writing
- Keep detailed manual and computerized daily records and logs; prepare operational and maintenance reports; assist with special projects as needed; order supplies and equipment
- Gather data and compile records, make field computations, and investigate and troubleshoot related problems; inspect contractual work performed to ensure compliance; read and interpret blue prints, maps and GIS system related information
- Work on special projects as assigned

Senior Sewer Maintenance Worker:

- Supervise and direct specific Sanitary District crews (Hot Spots, Line Cleaning, and CCTV)
- Maintain accurate data entry records of work performed by District crews
- Handle work orders by directing, assigning, supervising, overseeing, inspecting, evaluating, performing and reporting the work of assigned crews
- Obtain and maintain a Grade II Wastewater Collection System Maintenance Certification; obtain and maintain a California Class B commercial drivers license with airbrake and tanker endorsements
- Supervise the activities of a small crew or work independently without supervision
- Meet all roles and responsibilities of a Sewer Maintenance Worker
- Operate and maintain a combination "Vactor" truck and a "Hydroflusher" truck
- Install, operate, and repair sewer systems, laterals, flow meters, manholes, lift station equipment and mechanical and electrical equipment associated with sewer lift stations
- Troubleshoot sewer blockages and lift station problems
- Dig ditches and holes using power and manual equipment
- Erect various types of barricades around excavations
- Measure, cut and fit pipe
- Clean and repair various pumps
- Drive a truck to transport tools, department personnel and equipment
- Clean and maintain vehicles, shops and the maintenance yard
- Operate and maintain hand and power tools along with light and heavy equipment
- Secure necessary tools and equipment for trucks
- Assist with minor repairs to sewer collection systems and lift station equipment
- Spray pesticide and clean in and around manhole covers, pumps and equipment
- Work on special projects as needed

Ability to:

Supervise the activities of a small crew or work independently without supervision; perform the physical actions necessary to maintain sewer collection systems and job sites, including working in confined spaces and lifting up to 90 pounds; safely operate motorized vehicles including cars and trucks, and related equipment and tools, such as a forklift, hydraulic crane, jack hammer, air ratchet, shovel, hose, and a variety of basic power and manual hand tools; safely operate a CCTV video camera and equipment; work both independently and as part of a team; follow safe working practices and safety procedures to maintain safe working conditions; read maps, blueprints and other related diagrams; understand a carry out verbal and written instructions; work cooperatively with others; operate devices and read a variety of gauges and meters; operate personal and handheld computers; complete handwritten or computerized paperwork; perform arithmetical calculations using standard and metric conversions; communicate with the general public, contractors and co-workers in a courteous, effective, and professional manner and commit to providing quality customer service.

Sewer Maintenance Worker:

- Operate and maintain a combination "Vactor" truck
- Operate and maintain a "Hydroflusher" truck
- Install, operate and repair sewer collection systems, laterals, flow meters, manholes, lift station equipment and mechanical and electrical equipment associated with sewer lift stations
- Troubleshoot sewer blockages and lift station problems
- Read and interpret collection system maps, blueprints and diagrams
- Dig ditches and holes using power and manual equipment
- Erect various types of barricades around excavations
- Measure, cut and fit pipe
- Clean and repair various pumps
- Drive a truck to transport tools, department personnel and equipment
- Clean and maintain vehicles, shops and the maintenance yard
- Operate a two-way radio
- Read and record readings of various meters and gauges
- Use a personal computer to input data and retrieve work orders
- Operate CCTV video cameras
- Assist with minor repairs to sewer collection systems and lift station equipment
- Spray pesticide and clean in and around manhole covers, pumps and equipment
- Maintain equipment and tools
- Operate hand and power tools along with light and heavy equipment
- Secure necessary tools and equipment for trucks
- Conduct special projects as needed

Ability to:

Perform the physical actions necessary to maintain sewer collection systems and job sites, including working in confined spaces and lifting up to 90 pounds; safely operate motorized vehicles including cars and trucks, and related equipment and tools, such as a forklift, hydraulic crane, jack hammer, air ratchet, solder torch, tap machine, shovel, hose, and a variety of basic power and manual hand tools; safely operate a CCTV video camera and equipment; work both independently and as part of a team; follow safe working practices and safety procedures to maintain safe working conditions; read maps, blueprints and other related

diagrams; understand and carry out verbal and written instructions; work cooperatively with others; operate devices and read a variety of gauges and meters; operate personal and computers; complete handwritten or computerized paperwork; perform arithmetical calculations using standard and metric conversions; communicate with the general public, contractors and co-workers in a courteous, effective, and professional manner and commit to providing quality customer service.

Senior Administrative Analyst / Aide:

- Prepares written correspondence, such as letters and memos, presentations, staff reports, resolutions, grant applications, and environmental reports
- Reviews written materials prepared in the Water Services Division, including Sanitation Section
- Supervises Administrative Intern
- Organizes and assists in creating and completing projects, such as the Sewer System Management Plan (SSMP)
- Analyzes documents, proposed legislation, and regulations, to determine impacts to Water Services Division, including Sanitation Section
- Attend City committee meetings
- Attends meetings representing water and sewer services throughout Southern California
- Maintains records of studies previously conducted
- Manages submission of all section budget documents, insuring all deadlines are met
- Coordinates with section heads regarding supplemental requests
- Organizes meetings with section heads
- Prepares annual report documenting Best Management Practices
- Prepares Urban Water Management Plan
- Prepares benchmark studies on various topics
- Manages cooperative projects (grants) with Orange County Sanitation District
- Administers Operator State Certification Program
- Responds to various local, state and federal surveys
- Updates Emergency Response Plan
- Attends meetings regarding legislation, conservation, current events and projects occurring throughout Southern California
- Prepares Monthly Sanitary District Reports for Sewer Section
- Coordinates with supervisors to update Public Works Quarterly Newsletter for Water Service's Division, including Sanitation Section
- Updates Division web pages
- Presents information and attends the Sanitary District Citizen Advisory

Committee meetings

- Attends industry-related meetings representing the Sanitary District.
- Assists the Water Services Manager in preparing analysis and administrative reports to local, state, and federal regulatory agencies
- Represents Water Division, including Sanitation Section at public events such as: Garden Grove Pride, school assemblies, Public Works Open House, Children's Drinking Water Festival, and service group meetings

Associate Engineer:

- Reviews of details for equipment submittals
- Coordination of payments
- Utilizes requisitions for form of payments
- Attends developmental related meetings
- Manages and directs operations for Engineering Section
- Conducts project administration
- Reviews projects for impacts to water and sewer system
- Reviews and updates standards
- Administers AQMD (Air Quality Management District) mandates

Foreman:

- Conducts inspections of City water and sewer projects
- Attends developmental related meetings
- Administers customer service contacts for water and sewer projects

Sr. Engineering Technician:

- Assists in project administration
- Inputs GIS record system for Water and Sewer System layers
- Converts existing file drawings to computer format with Access program
- Maintains and updates AutoCad & other computer programs used in the Division
- Installs hardware related to SCADA system
- Installs upgrades and new programming for various reservoir and well sites. All programming related to MMI, PLC's, and SCADA
- Troubleshoot any problems related to programming in PLC's
- Install PLC's and related hardware
- Consults with Water Production staff for programming needs of the City's water system
- Makes recommendations on hardware and software upgrades
- Provides record information for public and developers
- Updates gate valve location book, (approximately 10,000 system

valves)

- Maintains Water and Sewer Atlas Records
- Maintains filing system for all record plans
- Updates and maintains Water Division Standard Plans
- Participates in consultant selection
- Provides consultant design review
- Facilitates inter-department interactions with sections for projects involved
- Reviews capital projects for utility input
- Maintains records for Capital Improvement Projects (CIP)
- Reviews and comments on each land use case
- Reviews development plans
- Coordinates and supervises construction of Water and Sewer projects
- Answers capacity letters and preliminary inquires
- Conducts fire flow testing and fire flow inquiries for new development
- Performs fire hydrant water pressure tests
- Attends developmental related meetings
- Administers customer service contacts for water and sewer projects
- Performs bi-monthly radio system checks with the Water Emergency Response Organization of Orange County

Environmental Service Coordinator:

- Coordinates City and District Environmental Compliance programs such as the National Pollutant Discharge Elimination System (NPDES) permit, Waste Discharge Requirements (WDRs) for Sanitary Sewer Collection Agencies, Air Quality Management District (AQMD) and hazardous materials/waste programs
- Coordinates City and District Environmental Public Outreach and Education Programs
- Coordinates and conducts enforcement actions
- Represents District at sub-committee meetings and General permittee meetings
- Reviews and coordinates the updating of District environmental compliance documents
- Performs duties as District's Fats, Oils, and Grease (FOG) Program Manager
- Responds to hazardous waste spills
- Coordinates environmental crimes investigations
- Reviews and approves development and construction plans to include conditional use documents

Senior Environmental Service Specialist:

- Conducts NPDES, AQMD and WDR compliance inspections at industrial facilities, food service establishments and other commercial facilities to include residential properties
- Responds to sanitary sewer overflows, that are FOG related
- Responds to hazardous waste spills
- Performs environmental crimes investigations
- Conducts Environmental Public Outreach and Education activities for the City and District
- Performs enforcement actions for the City and District
- Assists in the review of development and construction plans
- Attends regional NPDES meetings

Environmental Service Specialist:

- Conducts NPDES, and WDR compliance inspections at industrial facilities, food service establishments and other commercial facilities to

include residential properties

- Responds to sanitary sewer overflows, that are FOG related
- Responds to hazardous waste spills
- Performs environmental crimes investigations
- Conducts Environmental Public Outreach and Education activities for the City and District
- Performs enforcement actions for the City and District
- Attends regional NPDES meetings

Appendix B-2

Reporting Guidelines

Type of Spill	Initial Notification Timeframe	Agency to Notify by Phone	Report Timeframe
Category 1 – Discharges of untreated or partially treated wastewater resulting from an enrollee's sanitary sewer system failure or flow condition that: A. Reach surface water and/or reach a drainage channel tributary to a surface water; or B. Reach a municipal separate storm sewer system (MS4) and are not fully captured and returned to the sanitary sewer system or not otherwise captured and disposed of properly. Any volume of wastewater not recovered from the municipal separate storm sewer system is considered to have reached surface water unless the storm drain system discharges to a dedicated storm water or ground water infiltration basin (e.g., infiltration pit, percolation pond). **Greater than or equal to 1,000 gallons**, notify the OES and obtain a notification control number.	As soon as practical within 2 hours of becoming aware	Cal OES OCHCA OCPW	- Submit Draft report within 3 business days of becoming aware of the SSO. - Certify within 15 calendar days of SSO end date. SSO Technical Report: - Certify within 45 calendar days after the end date of any Category 1 SSO in which 50,000 gallons or greater is spilled to surface waters.
Category 1 – any volume < 1000 gallons	N.A.		
Category 2 – Discharges of untreated or partially treated wastewater of **1,000 gallons or greater** resulting from an enrollee's sanitary sewer system failure or flow condition that **do not** reach surface water, a drainage channel, or a municipal separate storm sewer system unless the entire SSO discharged to the storm drain system is fully recovered and disposed of properly.	N.A.		- Submit Draft report within 3 business days of becoming aware of the SSO. - Certify within 15 calendar days of SSO end date.
Category 3 – All other discharges of untreated or partially treated wastewater resulting from an enrollee's sanitary sewer system failure or flow condition.	N.A.		- Submit Certified report within 30 calendar days after the end of month in which SSO occurred.
Private lateral – Discharges of untreated or partially treated wastewater resulting from blockages or other problems within a privately owned sewer lateral connected to the enrollee's sanitary sewer system or from other private sewer assets.	As soon as practical.	Cal OES	- PLSDs that the enrollee becomes aware of may be voluntarily reported to the CIWQS Online SSO Database.
SSO Notification Contacts			
OES (Office of Emergency Services)	(800) 852 - 7550		

Appendix C-1

Code of Regulations (2010)

GARDEN GROVE SANITARY DISTRICT



CODE OF REGULATIONS

2010

A Codification of the Ordinances
and Regulations of the
Garden Grove Sanitary District,
11222 Acacia Parkway, PO Box 3070
Garden Grove, California, 92842

TITLE 1

GENERAL PROVISIONS

Chapters:

1.10 Code Adoption
1.20 Definitions and Rules of Construction

CHAPTER 1.10
CODE ADOPTION

Sections:

1.10.010 **Short Title, Reference to Code.**
1.10.020 **Codification Authority.**
1.10.030 **Effective Date.**
1.10.040 **Severability and Validity of Code.**
1.10.050 **Distribution of Code.**
1.10.060 **Notation of Amendments.**
1.10.070 **Amendments.**
1.10.080 **Prior Ordinances and Regulations.**
1.10.090 **District Fee Resolution.**

1.10.010 Short Title, Reference to Code. This Code shall be known as the "Garden Grove Sanitary District Code of Regulations" and it shall be sufficient to refer to said Code as the "Garden Grove Sanitary District Code" in any prosecution for the violation of any provisions thereof. It shall also be sufficient to designate any ordinance or resolution adding to, amending, or repealing, said Code, or portions thereof, as an addition or amendment to, or a repeal of, the "Garden Grove Sanitary District Code," or a portion thereof.

1.10.020 Codification Authority. This Code consists of the General Regulations of the Garden Grove Sanitary District as described under Section 6490 *et. seq*. of the Health and Safety Code of the State of California.

1.10.030 Effective Date. This Code takes effect upon the effective date of the Ordinance of the Board of Directors of the Garden Grove Sanitary District whereby this Code is adopted.

1.10.040 Severability and Validity of Code. If any section, subsection, sentence, clause, phrase or portion of this Code is for any reason held to be invalid or unconstitutional by the decision of any court of competent jurisdiction, such decision shall not affect the validity of the remaining portions of this Code. The Board hereby declares that it would have adopted this Code and each section, subsection, sentence, clause, phrase, or portion thereof, irrespective of the fact that any one or more sections, subsections, phrases, or portions be declared invalid or unconstitutional.

1.10.050 Distribution of Code. At least one (1) copy of this Code shall be filed for use and examination by the public in the office of the District Secretary or his or her designee. At least one (1) copy duly certified to by the District Secretary shall be maintained on file in the District Secretary's office. Additional copies shall be prepared in loose-leaf form and mounted to withstand heavy usage in such binders as the District Secretary may prescribe. Copies thereof shall be distributed as determined by the District Secretary.

1.10.060 Notation of Amendments. Upon the adoption of any amendment or addition to this Code, or upon the repeal of any of its provisions, the District Secretary shall certify thereto and shall make an appropriate notation in the volumes of said Code of the taking of such

action, noting thereon the number of the ordinances pursuant to which such action is taken. Duly certified copies of every ordinance making changes in such Code shall be filed in the office of the District Secretary in books for such purpose, duly indexed for ready reference.

1.10.070 Amendments. The District Secretary or his or her designee shall prepare copies of such changes in the Code for insertion in the loose-leaf copies thereof. Every section of the code so changed shall have printed thereon a notation of the ordinance number pursuant to which such change is adopted. All amendments shall be published in the Orange County Evening News, a newspaper published in this District and shall take effect upon the expiration of the week of publication pursuant to California Health and Safety Code § 6490.

1.10.080 Prior Ordinances and Regulations. This Code of Regulations is intended to be a comprehensive and complete statement of the District's ordinances and regulations. This Code therefore supersedes all ordinances, resolutions, and regulations of the District in effect on the effective date of this Code of Regulations and all such prior ordinances, resolutions, and regulations shall be deemed amended to read as provided in this Code of Regulations, with the exception of the following Ordinances and Resolutions that shall remain in full force and effect until amended as provided in this Code or under Law.

1.10.090 District Fee Resolution. Except as expressly provided in this Code, all fees, penalties, refunds, reimbursements, and charges of any kind levied, assessed, or collected by the District shall be designated in the District Fee Resolution, as amended by the District Board from time to time. Whenever applicable throughout the Code, reference may be made to the District Fee Resolution in lieu of any reference to specific fee amounts.

CHAPTER 1.20
DEFINITIONS AND RULES OF CONSTRUCTION

Sections:

1.20.010 **Construction.**
1.20.020 **Effect of Headings.**
1.20.030 **Reference to Acts or Omissions Within The District.**
1.20.040 **Prohibited Acts, Including Causing, Permitting or Suffering.**
1.20.050 **Reference Applies to Amendments.**
1.20.060 **Service of Notices.**
1.20.070 **Proof of Notice.**
1.20.080 **Tenses.**
1.20.090 **Gender.**
1.20.100 **Number.**
1.20.110 **Shall and May**.
1.20.120 **Acts by Deputy.**
1.20.130 **Definitions.**

1.20.010 Construction. Unless the provisions or the context otherwise require, these general provisions, rules of construction and definitions shall govern the construction of this Code. The provisions of this Code and all proceedings under it are to be construed with a view to effect its objects and to promote justice.

1.20.020 Effect of Headings. Title, chapter, section, and subsection headings contained herein shall not be deemed to govern, limit, modify or in any manner affect the scope, meaning or intent of the provisions of any title, chapter, section or subsection hereof.

1.20.030 Reference to Acts or Omissions Within The District. This Code shall refer only to the omission or commission of acts within the territorial limits of the District and to that territory over which the District has jurisdiction or control by virtue of any law, or by reason of ownership or control of property.

1.20.040 Prohibited Acts, Including Causing, Permitting or Suffering. Whenever in this Code any act or omission is made unlawful, it shall include causing, permitting, aiding, abetting, suffering or concealing such act or omission.

1.20.050 Reference Applies to Amendments. Whenever a reference is made to any portion of this Code, or to any ordinance or resolution of the District, the reference applies to all amendments and additions now or hereafter made.

1.20.060 Service of Notices. Whenever a notice is required to be given under this Code, unless different provisions herein are otherwise specifically made, such notice may be given either by personal delivery thereof to the person to be notified or by deposit in the United States mail in a sealed envelope, postage prepaid, addressed to such person to be notified, at his or her last known business or residence address as the same appears in the public records of the County or other

records pertaining to the matter to which such notice is directed. Service by mail shall be deemed to have been completed at the time of deposit in the post office.

1.20.070 Proof of Notice. Proof of giving any notice may be made by the certificate of any officer or employee of the District or of the City of Garden Grove, or by affidavit or declaration under penalty of perjury as provided by the California Code of Civil Procedure § 2015.5 of any person over the age of eighteen years, which shows service in conformity with this Code, or other provisions of law applicable to the subject matter concerned.

1.20.080 Tenses. The present tense includes the past and future tenses, and the future, the present.

1.20.090 Gender. The masculine gender includes the feminine and neuter.

1.20.100 Number. The singular number includes the plural, and the plural, the singular.

1.20.110 Shall and May. "Shall" is mandatory and "may" is permissive unless the context requires otherwise.

1.20.120 Acts by Deputy. Whenever a power is granted to or is duly imposed upon a public officer or employee, the power may be exercised or the duty may be performed by a deputy of such officer or employee, or by a person otherwise duly authorized, pursuant to law or ordinance or regulation or by an officer of the county or city, or by a deputy or employee of such officer when by contract with the District such officer is obligated and has agreed to perform certain duties on behalf of the District, unless this Code expressly provides otherwise.

1.20.130 Definitions. The following terms and phrases as used in this Code or in any ordinance, resolution, or code adopted hereby shall have the following meanings:

TERM	**DEFINITION**
AB 939	That State legislation commonly known as the California Integrated Waste Management Act (Stats 1989, Chapter 1095, as amended) as codified in Public Resources Code Section 40000, et seq., as it may be amended from time to time.
Bin	A metal container, commonly referred to as a dumpster, including a compactor and any such similar device, with a capacity of under ten cubic yards.
Board	The Board of Directors of the Garden Grove Sanitary District.
Bulky Items	Solid waste that cannot and/or would not typically be accommodated within a cart including specifically: furniture (including chairs, sofas, mattresses, and rugs); appliances (including refrigerators with and without Freon, ranges, washers, dryers, water heaters, dishwashers, plumbing, small household appliances and other similar items, commonly known as "white goods"); residential waste (including wood waste, tree branches, scrap wood, in the aggregate not exceeding one cubic yard per

TERM	DEFINITION
	collection); and clothing. Notwithstanding any provision hereof to the contrary, bulky items shall specifically include items commonly known in the waste industry as "brown goods," "e-waste" and "universal waste" (including, without limitation all types of electronic waste, stereos, televisions, computers and monitors, cellular phones, VCRs, microwaves and other similar type of equipment and products). Bulky items do not include car bodies, construction and demolition debris or (with the exception of appliances/white goods described above) items that cannot reasonably be moved with equipment of the type which, pursuant to industry standards, would normally be carried in a truck collecting bulky items.
Cart	A plastic container provided by a franchisee for collection, with a hinged lid and wheels serviced by an automated or semi-automated process, as opposed to a manual process of lifting and dumping.
Change in Operations	Any modification in the operational procedures of a commercial kitchen which has the potential to significantly increase the amount of grease generated by food preparation, including, without limitation, any substantial increase in the net public area, any substantial increase in the hours of operation, any significant increase in the size of the kitchen or the number of food service or food preparation employees, or any significant change in the size or type of food preparation equipment.
City	City of Garden Grove.
Collect or Collection or Collecting	To take physical possession of, transport, and remove solid waste from a premises.
Commercial Kitchen	Any business operating in the District as a full service or take-out restaurant, catering kitchen, employee cafeteria, or any other facility engaged in preparing and heat-processing food for consumption by the public or employees and which uses any equipment that produces grease vapors, steam fumes, smoke or odors that are required to by removed by a Type I or Type II hood. Establishments engaged only in assembling or serving food that is prepared entirely off site, and whose kitchen equipment consists only of beverage warmers and microwaves are not considered commercial kitchens.
Commercial Premises	Premises upon which business activity is conducted, including but not limited to retail sales, services, wholesale operations, manufacturing and industrial operations and MFRFs, but excluding residential premises upon which business activities are conducted when such activities are permitted under applicable zoning regulations and are not the primary use of the property. Notwithstanding any provision to the contrary herein, premises upon which MFRFs, hotels and motels are operated, shall be deemed to be commercial premises.
Commercial	Solid waste generated, produced or discarded by or at commercial premises.

TERM	DEFINITION
Waste	Includes any and all liquid or solid waste substance not sewage from any producing, manufacturing or processing operation of whatever nature. Notwithstanding the foregoing, it shall include sewage mixed with commercial or industrial waste; however, it shall not include domestic sewage from residences, business buildings and institutions containing only waste from waterclosets, wash water, baths and kitchens.
Construction and Demolition Waste	Solid waste generated, produced or discarded in connection with construction, demolition, landscaping, or general clean-up activities of premises, including, without limitation, concrete, plaster, drywall, wood scraps, metals, dirt, rock and rubble.
Container	Any type of solid waste receptacle, including a cart, bin, and rolloff box.
County	County of Orange.
District	Garden Grove Sanitary District.
Dwelling Unit	A residential structure containing one or more habitable rooms, having one and only one kitchen, and arranged for or occupied by one or more persons living as a household unit with common access to all living, eating and food preparation areas.
Engage in	To carry on, keep, conduct, maintain, or cause to be kept or maintained.
Ex-officio	By virtue of office.
Franchisee	Any person, persons, firm or corporation to whom a franchise has been granted by the District for the collection, processing, recycling and disposal of solid waste.
Garbage	All animal and vegetable refuse resulting from the preparation, handling or dispensing of food, including every accumulation of animal and vegetable matter that attends the preparation, consumption, decay, dealings in or storage of meats, fish, fruits, vegetables, tallow, bones or meat trimmings that are rejected as useless by the owner or producer thereof.
General Manager	The City Manager of the City of Garden Grove, or his or her designee.
Generator	Any person who generates, produces or discards solid waste.
Grease	Any oil, fat, or oily, fatty substance such as vegetable or animal fat that runs or may turn viscous or solidifies with a change in temperature or other conditions.
Green Waste	Organic waste generated from any landscape, including but not limited to, grass clippings, leaves, prunings, tree trimmings, weeds, branches and brush in sizes that can be placed in containers designated for green waste.

TERM	DEFINITION
Hazardous Waste	All substances defined as "hazardous waste," "acutely hazardous waste," or "extremely hazardous waste" by the State of California in Health and Safety Code, Division 20, Chapter 6.5, including but not limited to Sections 25110.02, 25115, and 25117, or in the future amendments to or recodifications of such statutes or identified and listed as Hazardous Waste by the US Environmental Protection Agency (EPA), pursuant to the Federal Resource Conservation and Recovery Act (42 USC §6901 et seq.) (RCRA), all future amendments thereto, and all rules and regulations promulgated thereunder.
Law	Denotes applicable federal law, the constitution and statutes of the state of California, the ordinances of the City of Garden Grove, California, and any and all rules and regulations which may be promulgated hereunder.
Medical Waste	All wastes defined as "medical waste," "sharps waste," or "home-generated sharps waste" by the State of California in the Medical Waste Management Act, as codified in Part 14 of Division 104 of the Health and Safety Code (commencing with Section 117600), including but not limited to Sections 117671, 117690-117700, and 117755, or in the future amendments to or recodifications of such statutes.
Multi-Family Dwelling	A building or lot containing more than one dwelling unit at which the District and/or a franchisee determines that each dwelling unit can receive solid waste handling services through the use of carts.
Multi-Family Residential Facility or MFRF	Any building or lot containing more than one dwelling unit at which the District and/or a franchisee determines the dwelling units must receive solid waste handling service through the use of shared bins, as they are not reasonably able to store carts or otherwise receive individualized solid waste handling service through the use of the automated collection system utilizing carts.
Nuisance	Anything which is injurious to health, or is indecent or offensive to the senses, or an obstruction to the free use of property, so as to interfere with the comfortable enjoyment of life or property, or other condition specified in Section 3479 of the Civil Code of the State of California.
Occupant	As used in reference to a building or land shall include any person who occupies the whole or part of such building or land, whether alone or with others.
Office	The use of the title of any officer, employee, or official shall mean such officer, employee, or official of the Garden Grove Sanitary District, or his/her duly authorized representative.
Operate	To carry on, keep, conduct, maintain, or cause to be kept or maintained.
Parcel	A parcel as designated by the County Assessor.

TERM	DEFINITION
Person	Any person, firm, association, organization, partnership, business trust, company or corporation, and any municipal, political or governmental corporation, district, body or agency, other than the Garden Grove Sanitary District and City of Garden Grove.
Premises	Any land, building and/or structure within the District where solid waste is generated or accumulated.
Public sewer	The main sewer or trunk sewer, constructed in a street, highway, alley, place or right-of-way dedicated to public use.
Recyclable Materials	That solid waste capable of being recycled, including but not limited to glass, newsprint, paper, aluminum, cardboard, certain plastics or metal.
Recycle Or Recycling	The process of collecting, sorting, cleansing, treating, and reconstituting or otherwise processing materials that are or would otherwise become solid waste and returning them to the economic mainstream in the form of raw material for new, reused or reconstituted products which meet the quality standards necessary to be used in the marketplace.
Refuse	All non-recyclable solid waste, trash, garbage, rubbish, offal, animal waste, and any other non-recyclable matter rejected as useless by the owner or producer thereof, whether combustible or non-combustible, except said term shall not include hazardous waste or medical waste as defined herein.
Remodeling	Any physical change to a building that requires a building permit.
Residential Premises	Premises within the District upon which single family and multi-family dwelling units exist; except, notwithstanding any provision to the contrary herein, for purposes of Title 5, premises upon which MFRFs, hotels, and motels are operated shall be deemed commercial premises.
Residential Waste	Solid waste, including recyclable materials, originating from residential premises.
Rolloff Box	A container of ten cubic yards or larger, including compactors.
Self-Hauler	Any person not engaged commercially in waste haulage who, pursuant to Title 5, provides for the collection, transportation and disposal of solid waste generated at his/her/its own premises.
Sewage	The water borne wastes from dwellings, kitchens, restaurants, institutions, stables, dairies, commercial or industrial buildings and other similar structures, but excluding any stormwater, rainwater, surface water, ground water, roof or yard drainage.
Single Family	A building or lot containing one dwelling unit and/or each dwelling unit within a

TERM	DEFINITION
Dwelling	multi-family dwelling.
Solid Waste	All discarded putrescible and nonputrescible solid, semisolid, and liquid wastes, including garbage, trash, refuse, rubbish, construction and demolition waste, industrial waste, commercial solid waste, bulky items (other than those bulky items defined as special wastes), and any other discarded solid, semisolid, and liquid waste permitted to be disposed of at a Class III landfill and which are included within the definition of "Nonhazardous Solid Waste" set forth in the California Code of Regulations, as they may be amended from time to time. Solid Waste does not include hazardous (Class I) waste, low-level radioactive waste, untreated medical waste, or Special Wastes as defined herein.
Solid Waste Handling Services	The collection, transfer, transport, recycling, processing, and/or disposal of solid waste.
Special Wastes	Wastes other than solid waste, including sewage sludge (biosolids), industrial sludge, asbestos, auto bodies, tires, used motor oil, hazardous waste, animal body parts, explosive substances, radioactive materials, and other materials which may not be disposed of at a Class III landfill or which require special handling. It shall also mean and include universal waste (or U-Waste), which are those wastes listed in Section 66261.9 of Division 4.5, Title 22, California Code of Regulations.
State	The State of California.
Street	Any street, highway, avenue, lane, alley, court, place, square, sidewalk, parkway, curb, or other public way in the District that has been or may hereafter be dedicated and open to public use and accepted by the city in which it is located, or such other public property designated as a street pursuant to any law of this State. For purposes of Title 5, the term street shall also include any privately owned and/or maintained right of way.
Tenant	As used in reference to a building or land shall include any person who occupies the whole or part of such building or land, whether alone or with others.

TITLE 2

ADMINISTRATION

Chapters:

2.10 District Board
2.20 Officers and Employees
2.30 Conflict of Interest Code

CHAPTER 2.10
DISTRICT BOARD

Sections:

2.10.010 Subsidiary District.
2.10.020 Officers.
2.10.030 Meetings.
2.10.040 Compensation.
2.10.050 Appeals.

2.10.010 Subsidiary District. The District is a subsidiary district of the City of Garden Grove, California, formed in 1997 upon the filing of a certificate of completion, dated May 29, 1997, by the Local Agency Formation Commission. The District is a result of the approval of a change of organization by the Local Agency Formation Commission pursuant to LAFCO Resolution No. 96-14 (Garden Grove Reorganization No. 141) and Government Code Sections 56833 et seq. Pursuant to the change of reorganization approval, the City Council of the City of Garden Grove, California, shall be the governing Board of Directors of the District.

2.10.020 Officers. The Board shall appoint a President and Vice-President from among its members. The President shall preside over all meetings unless absent in which case the Vice-President shall preside.

2.10.030 Meetings. The place and time of regular meetings shall coincide with the regular meetings of the City's City Council. Special meetings shall be held at a place and time noticed according to the Ralph M. Brown Act, which shall be observed for all Board business.

2.10.040 Compensation. Subject to the limitations of Health and safety Code Section 6489, Board Members shall receive compensation of $100 per day for each day's attendance at meetings, or for each day's service rendered as a Director, but not exceeding six (6) days in any calendar month, plus his/her reasonable expenses incurred incident thereto.

2.10.050 Appeals. Any action, determination, or decision of the General Manager may be appealed to the District Board pursuant to the provisions of this Section by any property owner affected by such action, determination, or decision, in writing, specifically stating the grounds for the appeal, and filed with the Secretary within five business days of the action, determination, or decision. The fee for such appeal shall be as established by the District Board in the District Fee Resolution and no appeal shall be deemed filed unless such payment is made. Upon the Secretary's receipt of a timely and otherwise proper appeal of an action, determination, or decision of the General Manager, the appeal shall be set for a public hearing before the District Board no less than ten business days nor more than forty-five business days after receipt of the appeal. Notice of the hearing shall be mailed to the appellant. Upon the hearing of the appeal, the District Board shall review the matter and may uphold, reverse, wholly or partly, or may modify any appealed action, determination, or decision of the General Manager. A reversal or modification shall only be approved by the District Board upon the adoption of a resolution which sets forth in writing the findings relied on to conclude that the appealed action, determination, or

decision was in error. A majority vote of the District Board shall be required to adopt a resolution reversing an action, determination, or decision of the General Manager.

CHAPTER 2.20
OFFICERS AND EMPLOYEES

Sections:

2.20.010 General Manager.
2.20.020 District Counsel.
2.20.030 Secretary.
2.20.040 Treasurer.
2.20.050 Employees.

2.20.010 General Manager. The General Manager of the District shall be the City Manager of the City of Garden Grove, California. The duties of the General Manager shall be to implement the policy decisions of the Board and to perform those other duties as required by the Board and to adopt such rules and procedures appropriate for and consistent with the provisions of this Code.

2.20.020 District Counsel. The District Counsel of the District shall be the City Attorney of the City of Garden Grove, California. The District Counsel shall provide all legal advice to the Board and perform all litigation services as needed.

2.20.030 Secretary. The Secretary of the District shall be the City Clerk of the City of Garden Grove, California. The Secretary shall perform all duties as prescribed by the General Manager.

2.20.040 Treasurer. The Treasurer of the District shall be the Treasurer of the City of Garden Grove, California. The Treasurer is responsible for the safekeeping, investment and payment of District monies, and shall perform such further duties as prescribed by the General Manager.

2.20.050 Employees. The General Manager is authorized to employ such employees as the District may need from time to time.

CHAPTER 2.30
CONFLICT OF INTEREST CODE

Sections:

2.30.010 City's Conflict of Interest Code Adopted by Reference.

2.30.010 City's Conflict of Interest Code Adopted by Reference. The District hereby adopts the City of Garden Grove's Conflict of Interest Code and any amendments thereto, pursuant to Health and Safety Code § 6491.2.

TITLE 3

REVENUE AND FINANCE

Chapters:

3.10 Annexation Charges
3.20 Sewer Connection Charges

CHAPTER 3.10
ANNEXATION CHARGES

Sections:

3.10.010 **Standard Charge.**
3.10.020 **Joint Tenancies.**
3.10.030 **Additional Charges.**
3.10.040 **Laterals and Wyes.**
3.10.050 **Separate Property.**
3.10.060 **Exclusion of Public Street.**
3.10.070 **Benefit Adjustments.**
3.10.080 **Existing Charges.**
3.10.090 **Property in Assessment Districts.**
3.10.100 **Mitigation of Development Impacts.**

3.10.010 Standard Charge. Property owners who wish to annex to the District shall pay charges in the amount specified by the Board in the District Fee Resolution.

3.10.020 Joint Tenancies. Each petitioner (or petitioners where title is held under joint tenancy, or as tenants in common or as community property) shall pay a minimum annexation charge in the amount specified by the Board in the District Fee Resolution for each separate lot or parcel of land up to one-half acre owned by him or them. In the event more than one petitioner (except where title is held in joint tenancy or as tenants in common or as community property) wishes to join in the same petition for annexation of the property which is contiguous to each other, they shall be considered as separate petitioners for the purpose of arriving at the cost of annexation under this Chapter.

3.10.030 Additional Charges. In addition to all other charges set forth above, each petitioner shall pay to the District any additional cost and expense incurred by the District which is of an unusual nature not normally incurred in the course of annexation; or any additional cost or expense incurred by the District to correct any error or misrepresentation, made by any petitioner to the District regarding any proposed annexation.

3.10.040 Laterals and Wyes. In addition to all other charges set forth above, each petitioner shall pay the cost of any laterals and wyes installed by the District for use by petitioners' property. The charges paid shall be the actual cost paid for the laterals or wyes by the District.

3.10.050 Separate Property. The annexation charge shall be for each separate parcel of property which the petitioner wishes to annex. Any parcel or group of parcels of property, which are contiguous to each other and which are included in one request or petition for annexation to the District, shall be considered as separate parcels. A separate piece of property for the purpose of this chapter is a piece of property which carries a separate and distinct legal description.

3.10.060 Exclusion of Public Street. For the purpose of determining acreage to establish the costs referred to herein, it is further provided that no existing public street or area

required by a City or County to be dedicated for widening any such street shall be included in the acreage computation for the purpose of arriving at the amount to be paid by such petitioner.

3.10.070 Benefit Adjustments.

A. In addition to the charges for annexation and other charges provided in this Code, any person desiring to have property annexed to the District shall be charged such additional amount as the Board finds equitable, fair and just in cases where:

1. The land proposed to be annexed would receive a direct benefit from lines or facilities which are being or have been installed by the District or others in the immediate area of the property proposed to be annexed whether by virtue of a special assessment district or otherwise; or

2. In any area within the District where the lines are being or have been installed by a person having a reimbursement program or agreement with the District and where the property of the person desiring to annex would receive a benefit by using the lines of said person who has a reimbursement program or agreement with the District.

B. The provisions of this section shall not take effect in any instance unless and until the Board shall, after considering the situation, make a finding that facts exist which bring said situation within the provisions of this section.

3.10.080 Existing Charges. Nothing in this chapter shall affect the obligation of any person to the District for annexation charges which are due or unpaid to the District upon the effective date of this chapter or thereafter resulting from the provisions of the general regulation ordinances and minute orders that are otherwise incorporated in this Code. All of said obligations shall remain in full force and effect and shall be due to the District in accordance with the provisions of said prior regulations and orders.

3.10.090 Property in Assessment Districts. The District hereby incorporates the provisions of Sections 5464 and 5474, as amended from time to time, of the State Health and Safety Code pertaining to connection of property to the District sewer lines for owners participating in special assessment districts.

3.10.100 Mitigation of Development Impacts. In addition to the fees set forth in this Chapter 3.10 and in Chapter 3.20 below, when a new sewer line or relief sewer line has to be constructed in any drainage basin because of new development or redevelopment or impending new development or redevelopment, the Board may spread the cost of such construction over such new developments or redevelopments. New developments or redevelopments may be permitted to connect to existing sewer lines having limited capacity provided such new developments or redevelopments contribute their pro rata share as determined by the District, or the estimated costs of a new line or relief line which would be built at a later time.

CHAPTER 3.20
SEWER SERVICE CHARGES

Sections:

3.20.010	**Sewer Service Charge Established, Credit.**
3.20.020	**Additions to Existing Structures.**
3.20.030	**Use Changes.**
3.20.040	**Larger Sewer Lines.**
3.20.050	**Sewer Service Charge Rates.**
3.20.060	**Collection of Sewer Service Charges Within City.**
3.20.070	**Collection of Sewer Service Charges Outside City.**
3.20.080	**Inspection Charges.**
3.20.090	**Additional Inspection Charges for Off Hours.**
3.20.100	**Additional Connection Charges.**
3.20.110	**Variances, Credits.**
3.20.120	**Agreements.**

3.20.010 Sewer Service Charge Established, Credit. Each lot, piece, parcel, dwelling, building or structure within the District, for which application is made for a permit to connect to the existing sewer lines of the District shall be required to pay a sewer service charge as set forth herein.

3.20.020 Additions to Existing Structures. Where additional living or commercial units are added to existing buildings or structures already connected to the sewer lines of the District and such additional units will be making use of said sewer line, then in such event there shall be paid a sewer service charge.

3.20.030 Use Changes. Where existing buildings and structures are now or hereafter connected to the sewer lines of the District and the use of such buildings and/or structures is changed to a use having a higher charge under this Chapter, then in such event there shall be paid a sewer service charge as set forth by the Board in the District Fee Resolution conforming to such new use. Said charge shall be the difference between what the prior use charge would be under this chapter and what the new use charge is under this chapter.

3.20.040 Larger Sewer Lines. Such sewer service charge shall be one charge for the connection and use of the sewage facilities of the District. Such charge shall be over and above all other fees or charges made by the District for inspection of all sewer lines larger than four (4) inches inside diameter.

3.20.050 Sewer Service Charge Rates. The charges and rates therefor shall be established by the District Board in the District Fee Resolution.

3.20.060 Collection of Sewer Service Charges Within City. Pursuant to the provisions of Health and Safety Code section 5471, as may be amended from time to time, the Board of Directors hereby elects to have the sewer service charge for parcels within the corporate boundaries of the City of Garden Grove collected with the charges of the City of Garden Grove's

water utility, and that these charges may be collected on the same bills as the water charges, or on separate bills, as may be determined by the City of Garden Grove.

3.20.070 Collection of Sewer Service Charges Outside City. Pursuant to the provisions of Health and Safety Code section 5471, as may be amended from time to time, the Board of Directors hereby elects to have the sewer service charges for those areas outside of the corporate boundaries of the City of Garden Grove collected on the tax roll in the same manner, by the same persons, and at the same time as, together with and not separately from, the general taxes of the District.

3.20.080 Inspection Charges. In addition to the sewer service charges herein, the additional amounts as the Board may establish in the District Fee Resolution shall be charged and received by the District for inspection of all sewer lines.

3.20.090 Additional Inspection Charges for Off Hours. In addition to the charges under Section 3.20.080 above, there shall be paid a sum in an amount established by the Board in the District Fee Resolution, for the time spent for inspection, including travel, for any inspection requested on a holiday, or at a time other than between 8:00 a.m. and 5:00 p.m. on regular working days.

3.20.100 Additional Connection Charges. The Board may establish in the District Fee Resolution such additional charges and fees as the Board may determine are reasonable and appropriate for connection to the District's facilities and for services the owner of the property may receive or request from the District.

3.20.110 Variances, Credits.

A. Variances. The Board may upon good cause being shown grant variances from any of the provisions of this Chapter and may reduce or eliminate any of the charges and/or fees referred to herein upon the finding that unusual circumstances exist which would result in undue hardship or unfairness to the person or where the Board finds that it would be in the best interests of the District to waive any part or all of such charges and/or fees.

B. Connection Credits. The Board, in order to encourage the use of the District sewer system instead of septic tanks and in order to facilitate connections to the District facilities as fairly as possible for all users, may allow a credit towards the Sewer Service Charge up to the amount of such fee in those instances where the future user is faced with abnormal or excessive additional costs either in construction of the local collector line or for payment of reimbursement for such lines.

C. Rehabilitation Credits. For construction replacing former dwellings, commercial or industrial buildings, the connection charge shall be calculated on the same basis as provided in this chapter for new construction unless such replacement construction is commenced within two (2) years after the completion of demolition of the former building. In that case, a credit against such charge shall be allowed and shall be the equivalent of the pro-rata connection charge for the building being demolished, calculated on the basis of current

charges for new construction, provided, however, that in no case shall such credit exceed the current connection charge.

3.20.120 Agreements.

A. This chapter does not alter any previous agreement between the District and any person concerning the subject matter herein discussed, if said agreement was made prior to the date of the applicable provision in this chapter or any applicable implementing Ordinance or Resolution.

B. Except where a person and the District have entered into a valid lease agreement, all costs set forth herein must be paid for before any property may be connected to the District's facilities.

C. Notwithstanding anything in this section to the contrary, if the Board makes a finding on evidence presented to it that any person in good faith entered into a contract in reliance on quotations given to him or her by the District based upon the charges and fees in effect prior to the effective date of this chapter, then the Board may reduce the charges and fees for that person to the amounts which were in effect prior to the effective date of this chapter.

TITLE 4

SEWERS REGULATIONS

Chapters:

4.10 Sewers
4.20 California Plumbing Code Adopted

CHAPTER 4.10
SEWERS

Sections:

4.10.010	**Connections to Sewer Lines, Permit Required.**
4.10.020	**Connection through adjoining property.**
4.10.030	**Residential sewer in undedicated street.**
4.10.040	**Septic Tank or Cesspool Discharges Prohibited.**
4.10.050	**Discharge of objectionable materials—Regulations.**
4.10.060	**Discharge of corrosive harmful wastes.**
4.10.070	**Rain and surface water prohibited.**
4.10.080	**Automobile washing areas regulated.**
4.10.090	**Opening manhole prohibited.**
4.10.100	**Discharge into sewer manholes regulated.**
4.10.110	**Cleaning manholes.**
4.10.120	**Maintenance of residential connections.**
4.10.130	**Commercial Waste Disposal—Permit required.**
4.10.140	**Commercial Waste Disposal—Permit application.**
4.10.150	**Commercial Waste Disposal—Limitations.**
4.10.160	**Commercial Waste Disposal—Acts prohibited.**
4.10.170	**Commercial Waste Disposal—Permit term**.
4.10.180	**Commercial Waste Disposal—Permit transfer.**
4.10.190	**Commercial Waste Disposal—Compliance tests and inspections.**
4.10.200	**Sewer closing procedure.**
4.10.210	**Connection Approvals.**

4.10.010 Connections to Sewer Lines, Permit Required. No connection to any of the District sewer lines shall be made unless a permit shall first have been issued by the District for connection. No connection pursuant to any such permit shall be made at any other place than that designated therein. Where additional fixtures in excess of the original fixture units are added to existing buildings or structures or reconnected to the sewer lines of the District and such additional fixtures will be making a use of said sewer lines, then in such event said additional fixtures shall not make use of said District sewer lines unless a permit shall first have been issued by the District for such additional fixtures.

4.10.020 Connection through adjoining property.

A. No connection from any building or other structure shall be made to any public sewer, if such connection or any portion thereof is in, under, across or upon any lot other than the lot on which said building or structure is located.

B. If a lot requiring a sewer connection is so situated that access to the public sewer is not possible except across some other lot, a sewer connection may be placed in a recorded easement which includes the right-of-way and maintains such connection and is appurtenant to the lot to be served by such sewer connection.

4.10.030 Residential sewer in undedicated street. No person shall connect any sewer which has been or may hereafter be, constructed in any street, highway, alley, right-of-way or other public place prior to the dedication and acceptance of such street, highway, alley, right-of-way or other public place by the City or County on behalf of the public, unless such sewer first mentioned shall have been laid under the supervision and/or to the satisfaction of the General Manager and in accordance with all City or County regulations applicable thereto.

4.10.040 Septic Tank or Cesspool Discharges Prohibited. No person shall connect or discharge into the District sewer lines any sewage, affluent or other matter from any septic tank or cesspool or to any building thereto.

4.10.050 Discharge of objectionable materials—Regulations. Except as otherwise provided in this Chapter, it is unlawful to place, deposit or discharge, either directly or indirectly, into any District sewer or into any sewer connection or on or upon any street, alley or public place or upon any private property or any other place in such a manner that the same will be permitted to run into any such District sewer, any of the following substances:

A. Any oil, petroleum, gasoline, naphtha, liquid asphaltum or petroleum product, or any fatty matter, benzene, fuel, or other flammable or explosive liquid, solid or gas;

B. Dead animals, fish, fruit or vegetable matter in any form.

C. Any commercial waste other than domestic sewage that will not readily disintegrate in the sewage treatment plant or that will cause or tend to cause obstructions in the sewer system or the sewage treatment plant or interfere with or tend to interfere with the efficient and successful operation of the system or the plant, or cause a potential hazard or objectionable odor;

D. Any chemicals or wastes destructive to masonry or portland cement concrete;

E. Grease, except in quantities commonly contained in domestic sewage, or commercial waste which may contain more than two hundred (200) parts per million, by weight, of fat, oil or grease;

F. Any effluent of a temperature exceeding one hundred forty degrees Fahrenheit (140º), or that would cause the temperature of wastewater entering the headworks of any wastewater treatment plant to exceed one hundred four degrees Fahrenheit (104º);

G. Any radioactive waste, which exceeds the limits specified in Title 17, Chapter 5, Subchapter 4, Group 3, Article 5, Section 30287 of the California Code of Regulations;

H. Any commercial waste, including but not limited to mineral salts, molds or wastes resulting from their manufacture and other products which will tend to sterilize activated sludge, trickling filter slimes, or slime growth on artificial or natural slow sand and filters;

I. Any solids or viscous substances of such size or in such quantity that may cause obstruction to the flow in the sewer or to be detrimental to proper wastewater treatment plant operation;

J. Any wastes with odors of such strength that the discharge of the wastes to any wastewater treatment plant results in, as determined by the District, an odor violation of the treatment plant's waste discharge requirements, where without the discharge no odor violation would have been anticipated;

K. Any waste containing substances that may precipitate, solidity or become viscous at temperatures between fifty (50º) degrees and one hundred (100º) degrees Fahrenheit;

L. Any waste capable of passing through the waste water treatment works and producing discoloration of treatment plant effluent;

M. Any water added for purposes of diluting wastes which would otherwise exceed applicable maximum concentration limitations;

N. Any waste which may create a fire or explosion hazard in the wastewater collection or treatment system;

O. Any waste prohibited by federal standards from being discharged to the sewer system.

P. Any ashes, sand, mud, straw, shavings, metal, glass, rags, feathers, tar, plastic, wood, paunch manure, rags, earth or stone dust or any other solid or viscous substance capable of causing obstruction of the flow in sewers or other interference with the proper operation of the sewage works;

Q. Any commercial waste containing a toxic or poisonous substance in sufficient quantity to injure or interfere with any sewage treatment process, constitute a hazard to humans or animals, or create any hazard in the receiving waters of the sewage treatment plant;

R. Any noxious or malodorous gas or substance capable of creating a public nuisance;

S. Any liquid or vapor having a temperature higher than 85 degrees Fahrenheit unless properly treated for scale inhibition;

4.10.060 Discharge of corrosive harmful wastes. Before any person may discharge alkalies, acids or other corrosive or harmful wastes into the public sewer, he or she shall reduce the biochemical oxygen demand (BOD) and control the pH to the extent which the District finds adequate, taking all circumstances into consideration. In all cases the wastewater discharge shall have a pH within the range of 6.0 to 9.5.

4.10.070 Rain and surface water prohibited. No person shall connect, any roof drain, yard drain or other conduit used for carrying off rain or surface water, to any District sewer or sewer leading thereto. No person shall cause or permit any indirect connection to the District sewer or house sewer leading thereto by means of which rain or surface waters are permitted to enter the public sewer.

4.10.080 Automobile washing areas regulated. No person engaged in washing motor vehicles or other equipment exclusive or incidental to any other business, shall permit any

water or effluent from such operations to flow into any District sewer unless the washing area is equipped with an approved sand and grease control device. Such washing areas shall be roofed over and shall be so constructed as to prevent any water from flowing over any street or public property, and to prevent any storm or surface water from entering any District sewer.

4.10.090 Opening manhole prohibited. No person shall open or enter, or cause to be opened or entered, any manhole in any District sewer to dispose of solid waste or other deleterious substances, or storm or surface waters, or for any other like purpose.

4.10.100 Discharge into sewer manholes regulated. The discharge of wastes into sewer manholes without the written permission of the District is prohibited.

4.10.110 Cleaning manholes. When wastewater is discharged into a specified manhole under permission from the District, it shall be discharged through a pipe or hose in such a manner that none of the effluent is left adhering to the sides or shelf of the manhole, and if any such effluent is inadvertently allowed to adhere to the sides or shelf of the manhole, the manhole shall be thoroughly cleaned with clean water.

4.10.120 Maintenance of residential connections. All residential connections and appurtenances thereto now existing or hereafter constructed, shall be maintained by the owner of the property served in a safe and sanitary condition and all devices or safeguards which are required by this title for the operation thereof shall be maintained in good working order.

4.10.130 Commercial Waste Disposal—Permit required. No person shall discharge or deposit any commercial waste into or upon any area in the District, or into any underground or surface waters in the District where such commercial waste is or may be deposited upon or may be carried through or over any area of the District except in conformity with the provisions of this chapter, and unless the person shall have first secured, in the manner hereinafter provided, a permit so to do from the District.

4.10.140 Commercial Waste Disposal—Permit application. Applications for permits required hereunder shall be filed with the General Manager upon printed forms to be prescribed and supplied by him or her. The General Manager may require any additional information, including plans and specifications which he or she may deem necessary for the proper disposition of the application.

4.10.150 Commercial Waste Disposal—Limitations. The General Manager may incorporate in any permit issued pursuant to this chapter, such limitations or conditions as may be reasonably necessary to effectuate the purpose of this chapter and may from time to time, review the limitations or conditions which have been incorporated in any permit theretofore issued, giving consideration to changed conditions, and may, whenever in his or her judgment it is advisable or required in order to maintain the waters of the District free from pollution, alter, revise, modify, delete or add further limitations or conditions applicable to any permit theretofore issued. No such alteration, revision, modification, deletion or addition of limitations or conditions shall be effective, however, until notice in writing thereof shall have been served upon the permittee in the manner provided by Section 1.20.060.

4.10.160 Commercial Waste Disposal—Acts prohibited. A permit issued under this chapter does not authorize any act or acts forbidden by any law, rule, regulation or order of any public agency or department and such fact shall be so stated on the face of all permits issued.

4.10.170 Commercial Waste Disposal—Permit term. A permit for the disposal of commercial waste shall be valid until suspended or revoked in the manner hereinafter provided.

4.10.180 Commercial Waste Disposal—Permit transfer. The General Manager may transfer a permit to the successor in interest of a permittee upon the filing by the successor in interest of a written application therefor, together with such evidence of transfer of title or interest as the General Manager may require; provided, however, a permit shall not be transferable from one location to another. The General Manager shall immediately notify by first class mail, the person that requested a transfer of a permit of the action taken.

4.10.190 Commercial Waste Disposal—Compliance tests and inspections. For the purpose of securing compliance with this chapter, the General Manager shall make periodic tests of samples of commercial waste obtained from the place or places of discharge or deposit, and such other tests deemed necessary for proper administration hereof. For purpose of making such tests or inspections, the General Manager or his or her duly authorized deputies or agents shall be permitted at all reasonable hours to enter any premises or place where commercial waste is being or is proposed to be discharged or deposited, or where there may be a violation of this chapter.

4.10.200 Sewer closing procedure. Whenever the use of a sewer is discontinued by reason of connection to another sewer or by reason of moving, wrecking or burning of a building, or for any other reason, such sewer shall be sealed at the property line or easement line or at the District sewer. Whenever the General Manager shall find that a sewer has not been sealed as required herein, he or she shall serve notice and post the property to that effect. Unless the sewer has been sealed as required within ten (10) days after the posting of such notice, the General Manager is authorized to have such sewer sealed, and the costs thereof shall be reimbursed to the District by the property owner within thirty (30) days after the District shall render an invoice for the same.

4.10.210 Connection Approvals. The General Manager may suspend, condition, or deny any or all applications for connections or permits for additional fixtures as provided under Section 4.10.010 of this Code where the General Manager determines that such action is necessary to remain within the aggregate operation capacity of the sanitary sewer system available to the affected property for which the connection or permit is sought or to meet the discharge standards of the sanitary sewer system imposed by the California Regional Water Quality Control Board for the Santa Ana Region. The decision of the General Manager to suspend, condition, or deny an application shall be subject to appeal to the District Board as provided in Section 2.10.050.

CHAPTER 4.20
CALIFORNIA PLUMBING CODE ADOPTED

Sections:

4.20.010 Adoption of California Plumbing Code as Adopted by City.

4.20.010 Adoption of California Plumbing Code as Adopted by City. Pursuant to California Health and Safety Code § 6491.2, the Chapter, Section and Part Numbers of the California Plumbing Code as adopted by the City and codified at Chapters 18.04 and 18.24 of the Garden Grove Municipal Code are hereby adopted by reference and made a part hereof, provided that whenever the term "administrative authority" is used in the code, it shall be construed to mean the Board, or its authorized representative.

TITLE 5

SOLID WASTE REGULATIONS

Chapters:

5.10 Solid Waste
5.20 Franchises

CHAPTER 5.10
SOLID WASTE

Sections:

5.10.010	**Collection Authority.**
5.10.020	**Collection Service Required.**
5.10.030	**Solid Waste Containers.**
5.10.040	**Self-Haulers.**
5.10.050	**Handling and Storage of Solid Waste and Recyclable Materials.**
5.10.060	**Frequency of Solid Waste Removal.**
5.10.070	**Removal of Heavy Objects.**
5.10.080	**Tampering with Solid Waste Prohibited.**
5.10.090	**Recyclable Materials as Franchisee or District Property.**
5.10.100	**Recycling by Private Individuals or Organizations.**
5.10.110	**Special Pickup—Bulky Items.**
5.10.120	**Placement of Containers for Collection.**
5.10.130	**Time of Container Placement.**
5.10.140	**Removal of Empty Containers.**
5.10.150	**Littering Prohibited.**
5.10.160	**Public Nuisance.**
5.10.170	**Hazardous Waste Disposal Prohibited.**
5.10.180	**Procedures for Disposing of Hazardous Waste.**
5.10.190	**Sanitary Maintenance Required.**
5.10.200	**Unlawful Containers - Notice of Violation.**
5.10.210	**General Penalty—Infraction.**
5.10.220	**Franchisee Remedies.**

5.10.010 Collection Authority.

A. The District shall provide for the collection and disposal of solid waste from all premises within the District either by granting one or more franchises to a public or private entity or entities for such collection and disposal or by such other methods as the Board may authorize.

B. Except as otherwise provided herein, the District and its duly authorized agents and employees, or franchisee(s) and their duly authorized agents and employees, shall have the exclusive right to gather, collect and dispose of solid waste from all premises within the District in accordance with the provisions of this Code, except that self-haulers registered in accordance with this chapter shall have the right, in a lawful manner, to dispose of solid waste generated from their own activities.

C. The General Manager shall have the charge and supervision of such collection and disposal and shall approve the routes and days thereof. When such routes and/or days of collection are established or changed, the franchisee, or, if none, the General Manager, shall give appropriate notice thereof to the public.

5.10.020 Collection Service Required.

A. Arrangements for Removal of Solid Waste Mandatory. Except as otherwise provided in this title, every owner, tenant, occupant or person in charge or control of every commercial or residential premises where solid waste is generated or accumulates shall either (1) subscribe to solid waste handling services with a franchisee or the District, as applicable; or (2) obtain and maintain registration as a self-hauler pursuant to this Chapter in connection with said premises.

B. Exception; Vacant Premises. The above requirement to provide for solid waste handling services shall not apply in connection with any residential premises at which all dwelling units are vacant, or commercial premises that are completely vacant; provided, however, that this exception shall only apply during the time period such premises are vacant and following receipt of written notice by the District and/or franchisee, as applicable, that such premises have been vacated. Any person seeking to avail himself or herself of the exception provided herein shall bear the burden of providing reasonable evidence to District and/or franchisee, pursuant to such regulations or guidelines as the General Manager is hereby authorized to develop or approve, demonstrating the premises are vacant. Premises shall not be deemed vacant for purposes of this exception during such period of time that such premises are unoccupied due only to a temporary absence of the owner(s) or occupant(s), such as a period during which the owner(s) or occupant(s) are merely away on vacation.

5.10.030 Solid Waste Containers.

A. Every owner, occupant or person in possession, charge or control of any premises within the District shall deposit or cause to be deposited all solid waste generated or accumulated on such premises, and intended for collection and disposal, in sealed, watertight bins, carts, rolloff boxes or other containers that are either (1) provided by, or acceptable to, a franchisee; or (2) approved by the General Manager for self-hauling purposes pursuant to this chapter. No owner, occupant or person in possession, charge or control of any premises shall utilize a bin, cart, rolloff box or other container not in conformance with the requirements hereof for the collection, accumulation or storage of solid waste.

B. For all residential premises, up to three carts, colored brown for green waste, black for non-recyclable materials and green for recyclable materials, will be furnished by the District or a franchisee without charge. Additional carts may be requested, but may be subject to an additional charge.

It is intended that solid waste generated at residential premises will be separated according to its character and placed in the applicable colored cart. In order to assist owners and occupants of residential premises to appropriately separate solid waste generated at such premises, the following is a list of examples of the types of acceptable and unacceptable

material to be placed in each color cart. This list is not intended to be exhaustive and shall be subject to change by the District or its franchisee at any time and to changes in applicable law.

GREEN CONTAINER—Acceptable	**BLACK CONTAINER—Acceptable**	**BROWN CONTAINER—Acceptable**
AEROSOL CANS (*completely empty)*	ANIMAL/FOOD WASTE	GRASS/LEAVES
ALUMINUM & TIN CANS	BATHROOM WASTES	PRUNINGS (*except palm fronds*)
ALUMINUM FOIL	CARPET/FLOORING	TWIGS/SMALLBRANCHES (*4 inches or less in diameter; 3 feet or less in length*)
BEVERAGE CANS	CAR PARTS	VEGETATION
BOTTLE CAPS	CAT LITTER	WOOD
BROCHURES	CIGARETTE BUTS	WEEDS
CARDBOARD	DIRT/CEMENT/ROCK (*do not fill more than ¼ of container)*	
CEREAL BOXES	DISPOSABLE DIAPERS	
COMPUTERPAPER	DRINKING GLASSES	
DRINK BOXES	FOOD WASTE	
EGG CARTONS	FREEZER / REFRIGERATOR FOOD BOXES	
FOAM CUPS AND PLATES (*unsoiled*)	FURNITURE	
FOOD CANS	GLASS AND CERAMIC PLATES/CUPS	
FROZEN FOOD BOXES	LIGHT BULBS (*no hazardous florescent bulbs*)	
GLASS BOTTLES AND JARS	MIRRORS	
JUICE CARTONS	PALM FRONDS	
JUNK MAIL & COUPONS	OLD CLOTHES/SHOES	
LAUNDRY BOTTLES	PLASTIC TOYS	
LEDGER PAPER	RAGS/SPONGES	
MAGAZINES	SOILED PAPER PLATES	
METAL COAT HANGERS	TOOTHPASTE TUBES / PUMPS	
MILK-TYPE CARTONS	WAXED PAPER	
NEWSPAPERS	WINDOW GLASS	
PAINT CANS (*empty only, dry cans, lids off*)		
PAPER/PAPER TUBES		
PIZZA BOXES		
PLASTIC (*#1-6*)		
PLASTIC BOTTLES / CONTAINERS		
PLASTIC CUPS/UTENSILS		
PLASTIC MILK JUGS		
PHONE BOOKS		
USED ENVELOPES		
WRAPPING PAPER		

GREEN CONTAINER—Not Acceptable	**BLACK CONTAINER—Not Acceptable**	**BROWN CONTAINER—Not Acceptable**
AEROSOL CANS (*non-empty*) WAXED/CARBON PAPER FOOD/LIQUID WASTE TRASH & GREEN WASTE HAZARDOUS WASTE	BULKY ITEMS CONSTRUCTION DEBRIS LARGE APPLIANCES RECYCLABLE MATERIALS GREEN WASTE HAZARDOUS WASTE	ANIMAL/FOOD WASTE CONSTRUCTION DEBRIS DIRT/ROCKS PALM FRONDS PLASTIC BAGS RUGS/FLOORING/METAL RECYCLABLES & TRASH HAZARDOUS WASTE

C. Container lids shall remain closed at all times that the container is unattended. If the solid waste contained within a bin, cart, rolloff box or other container exceeds the actual capacity of the container, then a larger container or multiple containers must be utilized. The owner, tenant, occupant and/or person or entity in control of a premises shall be responsible for the clean-up of any solid waste spilled, dumped or scattered as a result of a container overflow.

D. It is unlawful for any person to share, place solid waste in, or to otherwise use the bin, cart, rolloff box or other container of another person or business. Notwithstanding anything contained herein to the contrary, the sharing of containers shall be permitted under the following conditions:

1. The owner, property manager or person in charge or control of a premises upon which a multi-family dwelling or multi-family residential facility exists may arrange for bins, carts, rolloff boxes or other containers for shared use by the occupants, tenants or persons in possession of the dwelling units on such premises.

2. The occupants of a single commercial building or contiguous and adjacent commercial building may share a bin, cart, rolloff box or other container for solid waste handling services at a common location, subject to approval of the General Manager, which may be delegated to a franchisee. Approval by the General Manager shall be based upon (a) the type of solid waste generated by each commercial premises; and (b) the number of containers and frequency of solid waste collection needed to protect the public health, welfare and safety.

E. It is unlawful to use any bin, cart, rolloff box or other container furnished by the District or a franchisee for any purpose other than the collection, accumulation and storage of solid waste; or to convert or alter such containers for other uses; or to intentionally damage such containers.

5.10.040 Self-Haulers.

A. Self-haulers registered and operating in accordance with this chapter are only permitted to collect, transport and dispose of solid waste generated by and upon the self hauler's own premises. Under no circumstances may a self-hauler collect, transport or dispose of solid waste generated upon premises that are not owned, operated or controlled by the self-hauler. Notwithstanding any other provision of this chapter, registered self-haulers shall not

be permitted to share, place solid waste in, or to otherwise use the bin, cart, rolloff box, or other container of another person or business.

B. Registration. All self-haulers shall comply with the following registration requirements:

1. Each self-hauler shall obtain a registration application form from the General Manager. Self-haulers must renew their registrations at the commencement of each fiscal year. Initial applications following the adoption of these regulations must be submitted to the General Manager on or before September 30, 2010.

2. The application to register for self-hauling, whether upon initial application or renewal, shall include the following: (a) a list of all bins, carts, rolloff boxes and other containers to be used by the self hauler; (b) a list of all transport and disposal equipment to be used by the self hauler; (c) a written explanation of where all solid waste will be delivered for disposal and diversion; (d) a written plan explaining to the reasonable satisfaction of the General Manager how not less than fifty percent of solid waste collected will be diverted from disposal in compliance with AB 939; and (e) any other information deemed necessary by the General Manager to ensure protection of public health, safety and sanitary needs.

3. Renewal applications shall additionally include: (a) receipts from self-hauling activities undertaken in the prior year demonstrating that the applicant has effectively diverted at least fifty percent of all solid waste generated at its premises from landfills in a manner that complies with the requirements of AB 939; and (b) receipts from self-hauling activities undertaken in the prior year demonstrating that the applicant has delivered solid waste generated at its premises to appropriate disposal or recycling facilities at least as frequently as collection is required for such self-hauler by the General Manager.

4. The General Manager shall approve the application if it meets the requirements of this section, and if the equipment, containers, diversion plan and disposal plan meet with his or her reasonable satisfaction, and if evidence of past diversion and disposal requirements demonstrate the applicant has complied with the fifty-percent diversion requirement and otherwise complied with all laws related to disposal of solid waste.

C. Containers. Each self-hauler shall provide its own bins, carts, rolloff boxes or other containers. Bins, carts, rolloff boxes or other containers utilized by a self hauler must conform to industry standards for solid waste disposal and must be approved by the General Manager in writing prior to issuance of a self-hauler registration. In addition, any containers utilized by a self hauler shall comply with the following requirements:

1. All containers shall be maintained in good repair, and any question as to the meaning of this standard shall be resolved by the General Manager;

2. All containers shall be maintained in a sealed, watertight condition;

3. Self-haulers shall remove any graffiti that appears on containers within twenty-four hours after becoming aware of it.

D. Collection and Transport Equipment. Collection and transport equipment, including but not limited to transport trucks and vehicles, utilized by a self-hauler must be approved by the General Manager in writing prior to issuance of a self-hauler registration.

E. Non-Commercial Venture. It is the intent of this chapter to prevent and proscribe self-hauling activities undertaken as a commercial enterprise. Self-haulers must obtain all equipment, including containers and collection and transportation equipment, at a fair market value that does not include any hauling services, "free" or otherwise. A self-hauler may utilize its own employees to undertake self-hauling activities, but under no circumstance may a self-hauler utilize an independent contractor or any other person or entity for waste disposal services other than a franchisee.

F. Other Recycling Obligations. Self-haulers shall recycle all recyclable materials not otherwise addressed by this section to a degree and in a manner consistent with standards generally applicable to the solid waste disposal industry and as required by state law.

G. Collection Frequency. Unless otherwise specifically provided in this chapter, self-haulers shall remove solid wastes from their premises at least once per week. However, upon application to the District for registration as a self-hauler, the General Manager may determine a different frequency for solid waste collection, transport and disposal from the self-hauler's premises. This determination shall be based upon the nature of the premises, the type of solid waste generated by the premises, and the collection capacity of the self-hauler as demonstrated by information in the application.

H. Hazardous and Special Wastes. Unless lawfully and currently licensed under applicable state, federal and local laws, no self-hauler shall engage in the collection, transport or disposal of hazardous waste or special wastes.

I. Revocation. The General Manager may revoke prior approval of a self-hauler registration if the registrant either (1) fails to divert at least fifty percent of all solid waste generated at its premises from landfills in a manner that complies with the requirements of AB 939; or (2) fails to deliver solid waste generated at its premises to appropriate disposal or recycling facilities at least as frequently as collection is required for such self-hauler by the General Manager.

5.10.050 Handling and Storage of Solid Waste and Recyclable Materials. Solid waste and recyclable materials shall be placed directly into solid waste and recyclable materials containers respectively, except as hereinafter provided:

A. Garbage shall first be drained and wrapped to eliminate odor, leakage and fly and rodent infestation before being placed in solid waste containers.

B. Waste and manure from animals, except that generated from farms or stables, shall first be placed in moisture-resistant bags, securely sealed to prevent leakage, odor, fly and rodent infestation, before being placed in solid waste containers.

C. Untreated medical waste shall be stored, transported and disposed of in accordance with the provisions of the Medical Waste Management Act, California Health and Safety Code Section 117600 *et seq*., as it may be amended, the regulations adopted and promulgated pursuant to such statutes, and any applicable ordinances, regulations, or requirements of the Orange County Health Care Agency, as the same may be amended from time to time.

D. Ashes and dust shall be placed in disposable bags securely sealed to prevent leakage before being placed in solid waste containers.

E. Grass clippings, cuttings, leaves and other smaller vegetation including shrubs, brush and tree trimmings cut into short lengths shall be placed in approved containers designated for green waste.

F. Boxes and crates shall be dismantled or flattened. Boxes and crates constructed of recyclable materials shall be placed in approved containers designated for recyclable materials.

G. Construction and demolition waste or manure from farms and stables shall be stored in approved containers in a manner so as not to create a nuisance and at a location approved by the franchisee or the General Manager.

H. It shall be unlawful for a person occupying or having control of any premises to introduce refuse, contaminated material or any materials which are not recyclable into a solid waste container designed for recyclable materials.

I. Every person occupying or having control of any premises shall insure that a sufficient number of approved containers are available to properly store all solid waste, including recyclable materials and green waste, generated at said premises.

J. Any solid waste that does not reasonably fit within a container (such as furniture or other large bulky items) must be covered and protected, as by a tarp, netting or other secured material, in order to prevent the scattering of debris by natural forces such as wind or animals. Bulky items shall be removed from the premises at which they are generated pursuant to Section 5.10.110 or otherwise in accordance with the provisions of this title.

K. No person shall burn any solid waste within the District, except in an approved incinerator or other device for which a permit has been issued by the building official, fire marshal, and/or other public agency official having jurisdiction, and which complies with all applicable local, state, and/or federal permit requirements, laws, rules and regulations.

L. Any person who generates solid waste in connection with the construction of a new building, a building addition, remodel, or the demolition of any structure for which a building permit is required, shall either make arrangements for solid waste handling service

with the use of containers from a franchisee, be registered to self-haul such solid waste in the manner required by this Chapter, or make arrangements in accordance with Section 5.20.030(C).

5.10.060 Frequency of Solid Waste Removal. With the exception of vacant premises meeting the provisions of Section 5.10.020.B, above, each owner, tenant, occupant or person in charge of commercial or residential premises where solid waste, green waste or recyclable material accumulates shall cause said containers to be emptied and all solid waste shall be removed at least once each calendar week, except that food processing and food serving establishments shall cause said containers to be emptied of garbage at least three times each calendar week. The General Manager may provide written notice to the owner, occupant, or person in charge of any residential or commercial premises that the above minimum removal requirements are not sufficient to satisfy public health and safety needs or avoid the creation of a public nuisance due to unique circumstances at such premises and may direct that solid waste be removed by the owner, occupant, or person in charge of any premises so notified on a more frequent schedule and/or that additional or larger containers be utilized.

5.10.070 Removal of Heavy Objects. Each owner, tenant, occupant or person in charge of any premises shall at least once each calendar month collect and dispose of all waste material and debris, such as discarded automobile bodies, similar heavy or bulky objects and all other waste not specifically defined herein which may accumulate on such premises.

5.10.080 Tampering with Solid Waste Prohibited. No person other than the owner thereof, his or her agents or employees, an officer, employee, or authorized agent of the District, or the agents or employees of a franchisee, shall enter, tamper, or meddle with green waste, recycling or solid waste containers or the contents thereof or remove the contents of any such container or remove any such container from the location where the same shall have been placed by the owner thereof or the owner's agent. This includes both segregated and non-segregated recyclables at commercial and residential premises.

5.10.090 Recyclable Materials as Franchisee or District Property. Once recyclable materials are placed in a designated container for such purpose at a designated recycling collection location for collection by a franchisee or the District, the recyclable materials shall become the property of the franchisee or the District, as applicable.

5.10.100 Recycling by Private Individuals or Organizations. Nothing in this chapter shall limit the right of an individual person, organization or other entity to donate, sell or otherwise dispose of recyclable materials, provided that any such disposal is in accordance with the provisions of this title or of other applicable law.

5.10.110 Special Pickup—Bulky Items.

A. Household Bulky Item Collection Program. The Household Bulky Item Collection Program entitles residents of each single family dwelling within the District who subscribe to solid waste handling services with a franchisee to collection of bulky items generated by such residents. Residents of each residential premises may schedule with the franchisee three free bulky item collections within a calendar year. The program shall be limited to ten

(10) items maximum per scheduled collection. Requested bulky item collections in excess of three (3) per year may be subject to a charge. Reservations must be made in advance. Items must be placed at the curb or other location acceptable to the franchisee on the day scheduled for pickup. Items that are to be collected must be bulky, household items only, unable to be serviced by the normal automated curbside collection. Items eligible for collection are heavy discards, such as appliances, furniture, water heaters, large toys and tree trimmings. Items not accepted include automobile parts, tree stumps, earth, turf, sod, sand, clay, gravel, concrete, refuse from building or construction, and hazardous or toxic waste. Certain types of bulky items requiring special handling may be subject to an additional charge. All loose items eligible for collection must be bagged, bundled or tied. All bagged items may not weigh more than fifty (50) pounds or measure more than four (4) feet in length and eighteen (18) inches in diameter.

B. Commercial Bulky Item Collection. The owners, occupants, or persons in charge of commercial premises within the District, including MFRFs, who subscribe to solid waste handling services with a franchisee shall also be entitled to arrange for collection of bulky items generated at such premises by a franchisee. Such commercial bulky item collections shall be subject to reasonable charges and limits established by the franchisee.

5.10.120 Placement of Containers for Collection.

A. Generally. Except as otherwise agreed upon with the franchisee and/or determined by the General Manager, where rolloff boxes are used, or where collection locations in commercial or MFRF complexes have been approved by the District, all collection of solid waste, recyclable materials, green waste and garbage from commercial and residential premises shall be made from the gutter along the street adjacent to the premises, or the alley in the rear of each premise, provided, however, that no solid waste shall be picked up in any alley that has a width of less than fifteen (15) feet or where a truck with an eight (8) foot bed cannot pass with at least three and one-half (3 ½) feet of clearance on each side of the truck bed. Containers may be placed in the parkway next to the curb on arterial streets or as determined by the General Manager. The General Manager may also approve alternate locations which are readily accessible.

B. Obstructions. Containers must be placed three (3) feet away from any obstruction such as fire plug, mailbox, fence post or lamp post. There must be one (1) foot between each container and a minimum distance of three (3) feet from any vehicle.

5.10.130 Time of Container Placement. Except as otherwise determined by the General Manager, all solid waste must be placed at the street as provided herein only between the hours of 4 p.m. of the day prior to collection and by 6:00 a.m. on the day of collection.

5.10.140 Removal of Empty Containers. After containers have been emptied by the franchisee they shall be removed no later than 10:00 p.m. on the day of such collection by the owner, tenant, occupant or person in charge of every commercial or residential premises and placed and kept in an area not visible from the street.

5.10.150 Littering Prohibited.

A. It shall be unlawful for any person to throw, place, scatter or deposit any solid waste, medical waste, or hazardous waste in, upon or below the land of another, or upon any public property or right-of-way, except as herein authorized, or to throw, place, scatter or deposit any such waste in, upon or below the surface of any premises in such a manner that the same is or may become decayed, putrid or a nuisance or may otherwise endanger the public health or safety.

B. It shall be unlawful for any person to place, deposit or dump, or cause to be placed, deposited or dumped, or cause or allow to overflow any sewage, sludge, cesspool, waste water, or septic tank effluent, or allow the accumulation of human excreta or any garbage, solid waste materials, debris, rubbish, scrap iron, organic residues resulting from commercial canning or processing of food products, dead animals, manure, combustible materials, discarded automobiles and similar heavy, bulky objects or any other waste in or upon any public property not designated or set aside for such purpose by the Board or any other competent authority or upon any private property into or upon which the public is admitted by easement, license or otherwise.

5.10.160 Public Nuisance.

A. The accumulation and existence of garbage, solid waste, refuse or green waste on any premises, public or private, within the confines of the District, and/or the keeping of solid waste in containers other than those prescribed by this chapter, is hereby declared to be a public nuisance. No person who owns, controls, or occupies any premises within the District shall cause, permit, or allow any such nuisance to exist thereon.

B. It is unlawful, and a public nuisance, for any person to occupy or inhabit any property within the District for which arrangements have not been made and kept in full force and effect for solid waste handling services in a manner consistent with the provisions hereof.

5.10.170 Hazardous Waste Disposal Prohibited. It shall be unlawful for any person to place or cause to be placed material deemed to be hazardous waste in any container to be picked up with solid waste designated to be deposited at a Class III landfill. As a way of example, prohibited material includes, but is not limited to the following:

CHLORINE	POISON	LACQUER
ACETONE	ADHESIVES	AUTO/FURNITURE
AEROSOL CANS (*non-empty*)	GASOLINE	POLISH
AMMUNITION	SHELLAC	TREATED WOOD
EXPLOSIVES	LYE	SOLVENT
ANTI-FREEZE	OIL	PESTICIDES
GASOHOL	AMMONIA	WEED KILLER
PAINT	HOUSEHOLD CLEANERS	POOL CHEMICALS
PAINT THINNER	CHEMICAL DRAIN	DRUGS
VARNISH	CLEANERS	ACID
BATTERIES	FERTILIZER	BIOLOGICAL WASTE
FLORESCENT LIGHT BULBS	ASBESTOS	RADIOACTIVE WASTE

AND BALLAST COMPRESSED GAS CYLINDERS	TIRES DRUMS	ELECTRONIC WASTE UNIVERSAL WASTE

5.10.180 Procedures for Disposing of Hazardous Waste.

A. Each owner, tenant, occupant, or person in charge of any premises in the District shall, at least once every ninety (90) days unless more frequent disposal is required, dispose of all hazardous waste which has accumulated at such premises. Hazardous waste shall not be placed for regular collection but shall be disposed of as hereinafter specified or in a lawful manner in accordance with Chapter 6.5 of Division 20 of the California Health and Safety Code and/or other applicable law.

B. Group I materials such as caustics, toxic acids, chemicals, paints and liquids shall be disposed of by the owner, tenant, occupant or person in charge of any premises upon which such materials have accumulated only at an approved Class I disposal site. The waste must be in its original container and labeled clearly. The containers must be sound and not leaking. Glass containers must be protected from breakage.

C. Radioactive materials shall be disposed of by the owner, tenant, occupant or person in charge of any premises upon which such materials have accumulated under the supervision of the Orange County Health Department.

D. Explosives or highly flammable material, including small arms ammunition, war souvenirs, or black powder shall be disposed of by, or under the supervision of, the Orange County Fire Authority.

E. Abandoned, inoperative or dismantled vehicles or major component parts thereof shall be disposed of by a licensed dismantler or towing company.

F. Dead animals shall be disposed of by, or under the supervision of, the Orange County Animal Shelter.

5.10.190 Sanitary Maintenance Required. Each owner, tenant, occupant or person in charge of all commercial and residential premises shall keep each container maintained thereon for the deposit of solid waste in a clean and sanitary condition. When the General Manager determines that the owner, tenant, occupant or person in charge of any premises is not maintaining the containers thereon in a sanitary manner, said owner, tenant, occupant or person in charge shall be notified by Registered Mail to correct the problem within ten (10) days from the receipt of said notice. If the person fails to take action on the matter within the prescribed time allowed, the General Manager shall order the franchisee to provide such service. The containers shall be exchanged and sanitized thereafter as needed with a minimum frequency of four (4) times per year. Except as otherwise provided in an agreement between the District and a franchisee, the expense for exchanging and sanitizing the container shall be borne by the owner, tenant, occupant or person in charge.

5.10.200 Unlawful Containers - Notice of Violation.

A. Unauthorized Containers. No person other than the District or its authorized representative, a franchisee or its authorized representative, an authorized self-hauler, or person otherwise authorized to collect or transport solid waste pursuant to the provisions of this title shall place or leave standing any container on any public or private property within the District for the purpose of providing solid waste handling services.

B. Removal of Unlawfully Placed Container.

1. The General Manager may cause the posting of a notice to remove, as described below, in a conspicuous place on any container placed on any public or private property within the District in violation of this title.

2. Notices to remove posted pursuant to the provisions of this chapter shall specify the nature of the violation and shall state that the container must be removed within twenty-four (24) hours or it may be removed and stored by the District, and the contents disposed of, at the expense of the owner thereof. The notice shall indicate the time that it was posted and shall include the name and telephone number of a person designated by the District to hear any appeal or challenge to the requirement that the container be removed, and, further shall indicate that any appeal or challenge of the order for removal must occur within twenty-four (24) hours of the posting of the notice. The posting of a notice to remove shall constitute constructive notice to the owner and user(s) of the container of the requirement to remove the container.

3. If the container is not removed or an appeal received within twenty-four (24) hours after the notice to remove is posted, the General Manager may direct the removal and storage of the container. The owner of the container shall be responsible to reimburse the District for the actual cost of removal, storage and disposal. All amounts due to the District for the cost of removal, storage and disposal must be paid before the container may be returned to the owner. Such amounts shall constitute a debt owed by the owner to the District, and the owner shall be liable to the District in an action brought by the District for the recovery of such amounts.

a. The owner may contest and request a hearing to appeal the District's claim that the container was illegally placed or left standing by giving notice to the District within ten (10) calendar days of receipt of notification from the District that the container was impounded. The General Manager shall establish a procedure for such a hearing and the method for requesting such a hearing shall be included on the notice to remove. Where the owner asserts that the placement or use of the container was for a legitimate recycling activity or other activity not proscribed by this Code, the owner shall provide the District with information to substantiate that assertion. Said information shall be submitted with the notice from the owner and shall include, at a minimum, the following:

(i) A description of the materials of value deposited in the container and an estimate of their value;

(ii) The address, telephone number and contact person of the facility or facilities with whom the owner has arranged for the contents to be disposed of, processed or recycled, and proof of that arrangement;

(iii) Evidence that the facility or facilities where the contents are destined to be disposed of, processed or recycled carries all requisite approvals, permits, or other forms of authorization required by any governmental agency having jurisdiction, to conduct disposal, processing or recycling activities;

(iv) If the materials consist of recyclable materials, a declaration from the customer receiving service, signed under penalty of perjury, that the customer paid no broker's, consultant's or other fee or consideration in any form or amount to the service provider, or to any other person, in exchange for service, and that the contents of the container were either donated or sold by the customer to the service provider/owner;

(v) The District shall have the right to request such additional information as may be necessary or useful in determining the validity of the owner's contest.

b. If the District, acting through the General Manager or his designee, determines, in the exercise of reasonable discretion, that the owner has supplied evidence sufficient to support its contention that it was engaged in a legitimate recycling activity involving donated or sold materials, the container shall be returned to the owner without any charge for removal or storage of same.

4. If the identity of the owner of a container that has been removed by the District is known to the General Manager, the General Manager shall promptly cause notice to be mailed to the owner to claim the stored property. If the container is not claimed within ninety-five (95) days after removal and notice to the owner, or ninety (90) days after removal if the identity of the owner is unknown to the Director, the container and its contents shall be deemed abandoned property and may be disposed of accordingly. Where the contents present imminent threat to public health and safety, as determined by the District, they may be processed or disposed of without awaiting the expiration of the ninety (90) day claim period.

5. After a container has once been removed by the District pursuant to a notice to remove, the owner thereof shall be deemed to have actual notice of the provisions of this title, including the prohibition against the placement of unauthorized containers. In the event of a subsequent placement of a container owned by the same owner, or an affiliate of the owner, the General Manager may immediately, without the posting of a notice to remove, direct the removal and storage of the unlawfully

placed container and shall, in such case, give notice to the owner to claim the container. In such event, the owner shall, subject to the provisions of subsection 3 of this section, be responsible to reimburse the District for the actual cost of such removal, storage and disposal, which cost shall be paid by the owner before the container may be returned to the owner. If the container is unclaimed after notice is mailed to the owner and the expiration of the period set forth in subsection 4 of this section, the container and its contents shall be deemed abandoned property and may be disposed of accordingly. The costs incurred by the District for removal, storage and disposal shall constitute a debt owed to the District by the owner, who shall be liable therefor in an action by the District for the recovery of such amounts.

C. Summary Abatement of containers of unidentified owners. Notwithstanding any other provision of this Section to the contrary, the General Manager is authorized to direct the immediate removal, without notice, of any container placed on public or private property within the District in violation of this Section where the owner of the container is unidentified and cannot be ascertained from the owner or lessee of the property where the container is placed, and by an inspection of the container.

5.10.210 General Penalty—Infraction. Unless otherwise specified, any violation of this Chapter 5.10 shall be deemed to be an infraction. In addition, the District's legal counsel is authorized to cite violators for a misdemeanor offense pursuant to the general penalty provisions of this Code as an alternate remedy at counsel's discretion.

5.10.220 Franchisee Remedies. Nothing in this chapter shall be deemed to limit the right of a franchisee or the District to bring a civil action against any person who violates this chapter, nor shall a conviction for such violation exempt any person from a civil action brought by a franchisee or the District.

CHAPTER 5.20
FRANCHISES

Sections:

5.20.010	**Granting of Franchises; Exclusive Contract.**
5.20.020	**Franchise Operation Fee.**
5.20.030	**Collecting Solid Waste Without Franchise Prohibited—Penalty.**
5.20.040	**Franchise Non-Transferable.**
5.20.050	**Franchisee Regulations.**
5.20.060	**Purpose for Franchisee Regulations.**

5.20.010 Granting of Franchises; Exclusive Contract. The Board may by resolution or ordinance grant one or more franchises for solid waste handling services related to solid waste generated within the District and pursuant thereto, may, with or without inviting bids or proposals, enter into one or more franchise agreements or other contracts with one or more franchisees. The City may also be a party to any such agreements. Where such an agreement has been entered into between the District and a franchisee, the District may, without inviting bids or proposals, either prior to or after the expiration of such agreement, extend or renew the agreement for such period and on such terms and conditions as the Board may provide.

Effective May 17, 1989, the District provided for the collection and disposal of solid waste, green waste and recyclable material from all premises within the District by granting an exclusive contract and franchise for such collection and removal to Taormina Industries, Inc., dba Garden Grove Disposal, which exclusive franchise shall continue in effect in accordance with the terms of that certain agreement for solid waste handling services, effective July 1, 2010, between the District and Taormina Industries, Inc.'s successor in interest, Republic Waste Services of Southern California, LLC, dba Garden Grove Disposal. Except as otherwise provided herein or in said agreement, while any such agreement shall be in force, said franchisee shall have the exclusive right to gather, collect and remove solid waste, green waste and recyclable material from all premises within the District. No person, other than an authorized franchisee shall gather, collect or remove any solid waste, green waste or recyclable material from any premises or take any such waste from any container in which the same may be placed for collection or removal, or interfere with or disturb any such container, or remove any such container from any location where the same is placed, or remove the contents of any such container; provided that nothing in this chapter shall be deemed to prohibit the generators or the owners from personally collecting, conveying and disposing of solid waste in a manner consistent with this title and other applicable governing laws. Said license and privilege shall not be exclusive with respect to special removal needs created by demolition or construction projects for which the District or franchisee has no special disposal service available. To the extent that said license and privilege is exclusive, it shall be so only if the District or the franchisee shall be at all times ready, willing and able to collect, transport and dispose of all such solid waste.

5.20.020 Franchise Operation Fee. There is hereby imposed upon any person whose business is the collection of solid waste within the District an annual franchise fee in the amount specified by the District Board. This Section 5.20.020 is not intended to, and shall not,

preclude the imposition and collection by the District from a franchisee of consideration or cost reimbursements pursuant to the terms of a franchise agreement, whether denominated as franchise fees or otherwise, in addition to or in lieu of the franchise fee provided for in this Section 5.20.020.

5.20.030 Collecting Solid Waste Without Franchise Prohibited—Penalty.

It shall be unlawful for any person other than a franchisee (or its agents and employees) to collect any solid waste, green waste or recyclable material from any premises whatsoever, or otherwise provide solid waste handling services within the District, while there is in existence an exclusive franchise by the District to a person or persons to collect all solid waste, green waste or recyclable material from such premises. Every person who violates or infringes upon any exclusive franchise as heretofore set forth shall be guilty of a misdemeanor and shall be punishable pursuant to Section 6.10.010 of this Code. This prohibition shall not, however, apply to the following:

A. Self-haulers registered in accordance with chapter 5.10.

B. The owner, tenant or occupant of residential or commercial premises who has subscribed for and is receiving solid waste handling services with a franchisee, when such owner, tenant or occupant is hauling materials generated at his or her own premises to a lawful disposal or recycling facility. This exemption does not permit the hiring of any person or entity, other than a franchisee, to haul solid waste from one's own premises.

C. The collection, transportation and disposal of construction and demolition debris by a contractor, handyman, repairman or other similar service provider as an incidental part of the services provided to its customers rather than as a hauling service, provided that such solid waste is not collected or transported by a third party hired for the primary purpose of collecting and transporting said materials, and further provided that such services comply with any ordinances, policies and regulations of the District or the City relating to the collection of such materials.

D. The collection, transportation and disposal of yard waste, green waste and related solid waste by a gardener or landscaper as an incidental part of the gardening or landscaping services provided to its customers, rather than as a hauling service, provided that such solid waste is not collected or transported by a third party hired for the primary purpose of collecting and transporting said materials.

E. Any person or entity collecting recyclable material sold or donated to it by the generator of the recyclable material; provided, however, to the extent permitted by law, if the generator is required to pay monetary or non-monetary consideration for the collection, transportation, transfer or processing of recyclable material, and the generator receives a reduction or discount in price therefor (or in other terms of the consideration the generator is required to pay), such transaction shall not be considered a sale or donation.

F. Any District or City employee collecting or transporting solid waste to a disposal or recycling facility in the course and scope of their employment.

G. The collection, transportation or disposal of any hazardous waste, universal waste; e-waste; biohazardous waste; untreated medical waste; infectious waste; dead animals or portions of dead animals; used cooking fats, oils, grease and similar waste; or other materials which do not constitute solid waste by the generator thereof.

H. Any person otherwise authorized by law to collect, transport, and/or dispose of solid waste, green waste, or recyclable material within the District.

5.20.040 Franchise Non-Transferable. No franchise issued pursuant to this chapter shall be transferable, except as otherwise provided in a franchise agreement between the District and Franchisee and pursuant to the terms thereof.

5.20.050 Franchisee Regulations. Except as otherwise provided in a franchise agreement approved by the District Board, the following regulations apply to all those persons doing business within the District or residing therein who deposit or collect solid waste, green waste or recyclable materials:

A. Every person doing business within the District for the purpose of collecting solid waste, green waste or recyclable materials shall be adequately covered by public liability insurance. For the purposes of this section, adequate public liability insurance shall be defined to mean a minimum combined single limit of $10,000,000.00 per occurrence with a $10,000,000.00 policy aggregate limit of public liability coverage (either commercial general liability or comprehensive general liability) and $10,000,000.00 property damage coverage with the District named as an additional insured on the policy of insurance. Every person doing business within the District as aforesaid shall furnish the District with a Certificate of Insurance showing said District as an additional named insured on the policy of insurance. Such Certificate must be on file at the office of the District.

B. Every person doing business within the District for the purpose of collecting solid waste, green waste or recyclable materials shall use waste-collecting vehicles with steel-enclosed bodies.

C. Every person doing business in the District for the purposes of collecting solid waste, green waste or recyclable materials shall mark each vehicle and container with the name, address and telephone number of the person under which such business is conducted.

D. Every person maintaining or using equipment within the boundaries of the District for the purposes of collecting or depositing solid waste, green waste or recyclable materials shall keep such equipment in good mechanical condition and in a neat and orderly manner.

E. Every person doing business within the District for the purposes of collecting solid waste, green waste or recyclable materials shall not bring waste from outside the County on the vehicles collecting solid waste, green waste or recyclable materials within the District.

F. Every person doing business within the District for the purposes of collecting solid waste, green waste or recyclable materials shall, after each collection, insure that the immediate area around such collection is left in a clean, neat and orderly manner without any garbage,

trash, rubbish or refuse left on the ground. In the event the District, by or through its agents, determines that such person has not left the area of collection in a neat, orderly and clean manner then the District shall after four hours notice to such person cause said collection area to be cleaned and placed in proper order. The cost of cleaning and placing said collection area in proper order shall be determined by the District and billed to the person failing to comply with this regulation. Non-payment of such bill within ten (10) days after mailing shall be sufficient cause for the District to revoke any and all rights and privileges to do business within the District.

G. Every person doing business within the District for the purposes of collecting solid waste, green waste or recyclable materials shall provide sufficient containers to insure that between each collection of said solid waste, green waste or recyclable materials there shall not be deposited in said container waste that will exceed the height of the top of such container.

H Any container in which garbage or food residue is deposited shall be provided with a lid to cover said container. Such lid shall be kept on said container at all times and shall be replaced on said container by such person collecting such garbage or food residue after each collection.

I. Failure to comply with the regulations herein shall be sufficient cause for the District to revoke any and all rights and privileges to do business within the District.

5.20.060 Purpose for Franchisee Regulations. The purpose of this chapter is to provide the District with the necessary police power to regulate solid waste collection and disposal, and to insure that any and all franchises shall not be infringed upon by any person to protect the public health, welfare and safety.

TITLE 6

ENFORCEMENT

Chapters:

6.10 General Penalty
6.20 Code Enforcement
6.30 Payment and Enforcement of Fees

CHAPTER 6.10
GENERAL PENALTY

Sections:

6.10.010 General Penalty—Misdemeanor.
6.10.020 Infractions.
6.10.030 Public Nuisances—Injunctive Relief.

6.10.010 General Penalty—Misdemeanor. Section 6523 of the Health and Safety Code of the State of California provides that the violation of an ordinance, rule, or regulation of the District by any person is a misdemeanor punishable by fine not to exceed One Thousand Dollars ($1,000.00), or imprisonment in the county jail not to exceed thirty (30) days, or by both such fine and imprisonment. The District hereby incorporates such code section herein and further declares that each and every connection, occupancy or use in violation of the ordinances, rules or regulations of the District shall be deemed a separate violation and each and every day or part of a day of violation of the ordinance, rule or regulation that continues shall be deemed a separate offense hereunder and shall be punishable as such.

6.10.020 Infractions.

A. Whenever a violation or failure to comply with any mandatory requirement of this Code is expressly stated by this Code to be an infraction, that person shall be guilty of an infraction.

B. Notwithstanding Section 6.10.010 herein, the District Counsel or prosecuting attorney is hereby authorized at his or her discretion to prosecute any person violating any provision or failing to comply with any mandatory requirement of this Code as an infraction.

C. Any person convicted of an infraction shall be punishable by:

1. A fine not exceeding $100.00 for a first violation;

2. A fine not exceeding $200.00 for a second violation of the same provision of this Code within one year;

3. A fine not exceeding $500.00 for a third and subsequent violations of the same provision of this Code within one year.

D. Each person shall be guilty of a separate offense for each and every day during any portion of which any violation of any provision of this Code is committed, continued or permitted by such person and shall be punishable accordingly.

6.10.030 Public Nuisances—Injunctive Relief. In addition to the penalties provided herein, any condition caused or permitted to exist in violation of any of the provisions of this Code is declared to be a public nuisance and the District Counsel or authorized legal representative may with approval of the Board commence an action for abatement thereof in the manner provided by law. A civil action may be filed, whether or not criminal proceedings have been commenced for the same conduct. Every day such condition continues shall be regarded as a new and separate offense.

CHAPTER 6.20
CODE ENFORCEMENT

Sections:

6.20.010	**Maintenance inspections.**
6.20.020	**Sewage overflow—Authorized action by General Manager.**
6.20.030	**Disconnection authorized.**
6.20.040	**Cost Recovery for Violations.**
6.20.050	**Arrest Authority—City of Garden Grove Officers.**
6.20.060	**Arrest—Notice to Appear.**
6.20.070	**Arrest—Time and Place of Appearance.**
6.20.080	**Arrest—Release from Custody.**
6.20.090	**Arrest—Failure to Appear.**
6.20.100	**Arrest—Warrant for Arrest.**
6.20.110	**Arrest—Citations not required.**
6.20.120	**Notice of violation.**
6.20.130	**Continued violation—Activity cessation**.
6.20.140	**Permit suspension**.
6.20.150	**Permit—Revocation**.
6.20.160	**Permit—Revocation proceeding**.

6.20.010 Maintenance inspections. The District may inspect as often as it deems necessary, every sewage pumping plant, sewage treatment plant, industrial liquid waste pretreatment plant, residential sewer, grease control device, dilution basin, neutralization basin, backwater trap or valve, or other similar appurtenances to ascertain whether such facilities are maintained and operated in accordance with the provisions of this Code. All persons shall permit the District, City or their representatives, to have access to all such facilities at all reasonable times.

6.20.020 Sewage overflow—Authorized action by General Manager. Whenever it comes to the attention of the General Manager that sewage is overflowing from any plumbing fixture which is located below the elevation of the rim of the nearest upstream main sewer manhole due to the backing up of sewage in the District sewer, or due to pressure in the District sewer, or due to any cause whatsoever, except a temporary stoppage in any such plumbing fixture, the General Manager may order and require the plumbing fixture to be plugged up, or capped, or may require that a back-water trap or backwater sewer valve be installed to prevent such overflow.

6.20.030 Disconnection authorized. The District may disconnect from the District sewer any commercial or residential connection which is constructed or connected without a permit or which is used contrary to the provisions of this Code. The General Manager shall make every reasonable effort to notify the owner or occupant of the premises affected by any proposed disconnection and may grant a reasonable time for elimination of the violation.

6.20.040 Cost Recovery for Violations. Whenever any permittee or any other person causes obstruction, damage, or destruction of a public sewer, street, or public improvement, or is responsible in whole or in part for any spill or discharge of effluent in a manner that is not permitted under this Code, such permittee or person shall reimburse the District, the City of Garden Grove, and any other affected public agency for all costs, including reasonable administrative and overhead costs incurred for flushing, repairing, reconnection, or cleaning of such sewer, street, or public improvement within thirty days after the District, City, or affected public agency shall render an invoice for the same.

6.20.050 Arrest Authority—City of Garden Grove Officers. The District's code enforcement officers, code enforcement officers and police officers of the City of Garden Grove, shall have the power to arrest persons for violations of the District's regulations whenever the officers or the officers' designated employees have reasonable cause to believe that the person has committed the offense.

6.20.060 Arrest—Notice to Appear. If any person is arrested for a violation of any provision of this code and such person is not immediately taken before a magistrate, as more fully set forth in the California Penal Code, the arresting officer shall prepare in duplicate a written notice to appear in court, containing the name and address of such person, the offense charged, and the time and place when such person shall appear in court.

6.20.070 Arrest—Time and Place of Appearance. The time specified in the notice to appear must be at least five (5) days after the arrest. The place specified in the notice to appear shall be either:

A. Before a judge of a justice court or a municipal court judge within the county in which the offense charged is alleged to have been committed, and who has jurisdiction of the offense and who is nearest and most accessible with reference to the place where the arrest is made; or

B. Upon demand of the person arrested, before a judge of a municipal court having jurisdiction over such offense, at the county seat of the county in which such offense is alleged to have been committed; or

C. Before a judge in the judicial district in which the offense is alleged to have been committed; or

D. Before an officer authorized by the District to receive a deposit of bail.

6.20.080 Arrest—Release from Custody. The officer shall deliver one copy of the notice to appear to the arrested person; and the arrested person in order to secure release must give his written promise so to appear in court by signing the duplicate notice which shall be retained by the officer. Thereupon the arresting officer shall forthwith release the person arrested from custody. The officer shall as soon as practicable file the duplicate notice with the magistrate specified therein.

6.20.090 Arrest—Failure to Appear. Any person willfully violating his written promise to appear in court is guilty of a misdemeanor and shall be punished by a fine not to exceed one thousand dollars or imprisonment in the county jail for a term not to exceed six months, or by both such fine and imprisonment, regardless of the disposition of the charge upon which he was originally arrested.

6.20.100 Arrest—Warrant for Arrest. When a person signs a written promise to appear at the time and place specified in the written promise to appear and has not posted bail as provided in Section 853.1 of the California Penal Code, the magistrate shall issue and have delivered for execution a warrant for the person's arrest within twenty (20) days after his failure to appear as promised, or if such person promises to appear before an officer authorized to accept bail other than the magistrate and fails to do so on or before the date which he promised to appear, then, within twenty (20) days after the delivery of such written promise to appear by the officer to the magistrate having jurisdiction over the offense.

6.20.110 Arrest—Citations not required. Nothing contained in this chapter shall be deemed or construed to require any arresting officer to issue a citation instead of taking the person arrested before a magistrate as otherwise provided by law.

6.20.120 Notice of violation. In addition to the enforcement authority herein, whenever the General Manager finds that any person is acting in violation of any provision of this code or of any permit issued hereunder, he or she may serve upon the person causing or suffering such violation to be committed, including the permittee, if a permit has been issued, a notice of violation. The notice shall state the act or acts constituting the violation and shall direct notice as the General Manager may deem reasonable.

6.20.130 Continued violation—Activity cessation. Whenever the General Manager finds that the continued violation of any provision of this Code or of the conditions of any permit issued hereunder is so aggravated that the prevention of pollution of underground or surface waters requires the immediate cessation of the activities causing the violation, he or she may so direct in a notice of violation. A person who has been so notified shall immediately cease all such activities and shall not resume them until the General Manager determines that all of the violations charged in the notice have been corrected.

6.20.140 Permit suspension.

A. In addition to the enforcement authority herein, the General Manager may suspend a permit by giving notice thereof to the permittee:

   1. When a permittee fails to rectify a violation within the time specified in a notice thereof; or

   2. When a violation is so aggravated as to require cessation of activities as provided in the preceding section.

B. A permit suspended by the General Manager shall be reinstated by the General Manager when all of the violations charged in a notice thereof have been corrected.

6.20.150 Permit—Revocation. In addition to the enforcement authority herein, the Board may, after notice and hearing as hereinafter provided, revoke a permit on any one or more of the following grounds:

A. Fraud or deceit in obtaining a permit;

B. Failure of a permittee to correct a violation within the time prescribed in a notice of violation;

C. Willful violation of any provisions of this Code or a condition or limitation of a permit, or any lawful order of the General Manager.

6.20.160 Permit—Revocation proceeding. Proceedings for the revocation of a permit may be initiated:

A. By the General Manager by serving upon the permittee a copy of, and filing with the Secretary, a written recommendation of revocation setting forth the grounds therefore and requesting a hearing thereon before the Board;

B. By the Board on its own motion or upon complaint of a third person, by serving or causing to be served upon the permittee and the General Manager a notice of intention to revoke, setting forth the grounds therefor and designating a time and place for hearing thereon.

CHAPTER 6.30
PAYMENT AND ENFORCEMENT OF FEES

Sections:

6.30.010	**Bill Payment.**
6.30.020	**Reserved.**
6.30.030	**Returned Checks.**
6.30.040	**Aged Overdue Payment.**
6.30.050	**Service Termination Authority.**
6.30.060	**Notice—Hearing.**
6.30.070	**Reconnection—Reimbursement.**
6.30.080	**Habitation During Disconnection Declared a Public Nuisance.**

6.30.010 Bill Payment. The amounts billed by the District to the property owner shall be paid by the due date stated in the bill. For amounts unpaid by the due date, the District shall send bills bearing notification to the property owner concerned that if the bills are not paid within fifteen (15) days, they shall become delinquent and, pursuant to Division 5, Part 3, Chapter 6, Article 4 of the California Health and Safety Code (§§ 5470 et seq.), a basic penalty equal to ten percent (10%) of the charge shall be immediately imposed, and an additional penalty in the amount of one-half percent (½%) of the charge per month shall be imposed for each month that payment is delinquent thereafter. Charges which remain delinquent for a period of sixty (60) days shall become and constitute a lien against the property against which the charge is imposed, which lien shall become effective upon recordation with the County Recorder and when so recorded shall have the force, effect and priority of a judgment lien.

6.30.020 Reserved.

6.30.030 Returned Checks. A returned check charge in the amount specified by the District Board in the District Fee Resolution may be imposed for all checks made payable to the District which are returned from the bank for any reason whatsoever. This fee shall be payable each time a check is returned. Further, all provisions for collection of delinquent accounts as set forth in this chapter shall be applicable to the returned check charge.

6.30.040 Aged Overdue Payment. For any bills unpaid within two weeks after the end of the fiscal year, the District shall notify the property owner concerned that the Board shall review and approve as a charge against the property the delinquent amount, and the amount of the penalty and interest. The delinquent bill shall be filed with the County Auditor and, upon recordation by the County Recorder, shall constitute a lien against the property. The assessment shall be collected at the same time and in the same manner as are county property taxes and shall be subject to the same penalties and to the same procedure for foreclosure and sale as provided for ordinary county taxes.

6.30.050 Service Termination Authority. As a method of enforcing the provisions of this Code or any other resolution, ordinance, rule or regulation pertaining to the

collection or disposal of sewage or solid waste or where any charges or fees are due, the Board upon a 3/5 vote may authorize the termination of sewer service to any property.

6.30.060 Notice—Hearing. Prior to termination of sewage service, the Board shall notify in writing the owner, tenant, occupant or person in charge of such property that service is intended to be so terminated and conduct a hearing thereon. Such notice shall be mailed to the owner at the address shown on the records of the assessor of the County or is known to the District and a copy shall be delivered to the tenant, occupant, or person in charge thereof, or posted conspicuously on the property. The notice shall state the date of proposed termination of service and the reason therefor and the date the Board shall hold a hearing upon such intended termination. Such hearing shall not be held less than 10 days subsequent to the giving of notice as herein provided.

6.30.070 Reconnection—Reimbursement. Where service has been disconnected as provided herein the Board may require the person or persons making application for re-establishment of service to pay all expenses incurred by the District in causing such disconnection and re-connection before permission is granted re-establishing service to such property.

6.30.080 Habitation During Disconnection Declared a Public Nuisance. During any period of disconnection, the habitation of such disconnected premises by human beings shall constitute a public nuisance, whereupon the District shall cause proceedings to be brought for the abatement of the occupancy of said premises by human beings during the period of such disconnection. In such event and as a condition of re-connection there shall be paid to the District a reasonable attorney's fee and costs of suit arising in said action.

Appendix C-2

Stormwater Quality

Chapter 6.40 STORMWATER QUALITY

6.40.010 Purpose

A. The United States Congress passed the Clean Water Act (33 USC Section 1251 et seq., as amended, including Section 402(p) therein) as a mandate, in part, that municipal separate storm sewer systems, such as in Orange County, obtain permits to "effectively prohibit non-stormwater discharges into the storm sewers" and "require controls to reduce the discharge of pollutants to the maximum extent practicable...." This permitting authority has been delegated by the United States Environmental Protection Agency (EPA) to the State of California, which has authorized the State Water Resources Control Board and its local regulatory agencies, the Regional Water Quality Control Boards, to control non-point source discharges to California's waterways.

B. The Santa Ana and San Diego Regional Water Quality Control Boards have addressed the obligation to implement the Clean Water Act by issuing Waste Discharge Requirements governing stormwater runoff for the County of Orange, Orange County Flood Control District, and the incorporated cities of Orange County. These permits shall be referred to collectively in this chapter as the National Pollution Discharge Elimination System Permit (NPDES) permits.

C. The City is participating as a "co-permittee" under the NPDES permits in the development and adoption of an ordinance to accomplish the requirements of the Clean Water Act.

D. Stormwater runoff is one step in the natural cycle of water. However, human activities, such as agriculture, construction, and the operation and maintenance of an urban infrastructure may result in undesirable discharges of pollutants and certain sediments, which may accumulate in local drainage channels and waterways and eventually may be deposited in the waters of the United States.

E. The purpose of the ordinance codified in this chapter is to participate in the improvement of water quality and comply with federal requirements for the control of urban pollutants to stormwater runoff that enters the network of storm drains throughout Orange County. (2803 § 1, 2011; 2401 § 1, 1997)

6.40.020 Finding and Intent

A. The City is authorized by Article XI, Section 5 and Section 7 of the State Constitution to exercise the police power of the state by adopting regulations promoting the public health, public safety and general prosperity.

B. The City has determined that a legitimate local purpose is present in complying with the provisions of the NPDES permit.

C. A reduction in stormwater-borne pollution will promote the public health and protect the general welfare of the locality by reducing the level of artificial and naturally occurring constituents, which may improve the quality of the waters in this region.

D. The land use authority exercised by the City, pursuant to California Government Code Section 65300 et seq., requires regional planning and the adoption of policies protecting the environment through the imposition of reasonable conditions on the use of land.

E. This chapter conforms to the policies and goals of the General Plan adopted by the City, pursuant to California Planning and Zoning Law, for the protection of the portions of watersheds located within Orange County by implementing measures to control erosion and prevent the pollution of streams and other waters.

F. Certain provisions of this chapter may be coordinated with the local coastal program for inclusion in coastal development permits, pursuant to California Public Resources Code Section 30607, as mitigation for the negative effects of grading, construction, reconstruction, and changes to the intensity of use of land or water resources within the coastal zone.

G. The Subdivision Map Act, California Government Code Section 66411 authorizes the City to regulate and control the design and improvement of subdivided lands and mitigate the burdens of proposed development by imposing reasonable conditions on map approval.

H. California Constitution Article XI, Section 7 and Government Code Section 38660 authorize the City to establish appropriate conditions for the issuance of building permits, which require the installation of improvements reasonably related to the proposed use of property.

I. Government Code Section 38771 authorizes the City to declare as public nuisances undesirable acts that may injure health or cause interference with the comfortable enjoyment of life or property and to provide for the abatement of the same.

J. The City may commence civil actions, pursuant to Federal Clean Water Act Section 505(a), against any person or any governmental agency acting in violation of any condition of the NPDES permit.

K. All industrial dischargers subject to the provisions of the State General Industrial Storm Water Permit and General Construction Activity Storm Water Permit (referred to collectively in this chapter as the "state general permits") must comply with the lawful requirements of the City, which regulate discharges of stormwater to the storm drain system within its jurisdiction.

L. All industrial dischargers subject to the provisions of the state general permits are required to maintain stormwater pollution prevention plans on-site and make them available to the City for inspection.

M. All dischargers subject to the provisions of the State General Construction Activity Storm Water Permit may be required by the City, with the concurrence of the Santa Ana Regional Water Board, to amend any stormwater pollution prevention plan.

N. All industrial dischargers subject to the provisions of the State General Industrial Storm Water Permit are required to maintain a description of the required monitoring program on-site and make it available to the City for inspection.

O. The City has jurisdiction over certain stormwater facilities and other watercourses within the City, and the water discharges into these facilities may be subject to the provisions of the State General Industrial Storm Water Permit; accordingly, the City may certify (but is not required to certify) in writing that regulated dischargers have developed and implemented effective stormwater pollution prevention plans and should not be required to collect and analyze stormwater samples for pollutants.

P. The City has jurisdiction over certain stormwater facilities and other watercourses within the City, and these facilities may receive stormwater discharges from properties and activities regulated under the provisions of the state general permits, and the City may request that the regulated dischargers furnish information and records necessary to determine compliance with the state general permits.

Q. The City has jurisdiction over certain stormwater facilities and other watercourses within the City, and these facilities may receive stormwater discharges from properties and activities regulated under the provisions of the state general permits, and the City may, upon presentation of credentials and other documents required by law:

1. Enter upon the discharger's premises where a regulated facility is located or where records must be kept under the conditions of the state general permits;

2. Access and copy, at reasonable times, any records that must be kept under the conditions of the state general permits;

3. Inspect, at reasonable times, any facility or equipment related to or impacting stormwater discharge;

4. Sample or monitor for the purpose of ensuring compliance with the state general permits.

R. The enacting of this chapter is a condition of the NPDES permit, the requirements of which are exempt from the California Environmental Quality Act pursuant toPublic Resources Code Section 21000, et seq. (CEQA); and

S. This chapter is subject to CEQA categorical exemption Classes 1 through 4, 6 through 9, 21 and 22, pursuant to the CEQA Guidelines, respectively, Title 14, California Code of Regulations Sections 15301, 15302, 15303, 15304, 15306, 15307, 15308, 15309, 15321, and 15322. (2803 § 1, 2011; 2401 § 1, 1997)

6.40.030 Definitions

For purposes of this chapter:

"Authorized inspector" means the City Manager and persons designated by and under his or her instruction and supervision, who are assigned to investigate compliance with, detect violations of, and/or take actions pursuant to this chapter.

"City" means the City of Garden Grove, Orange County, California.

"Co-permittee" means the County of Orange, the Orange County Flood Control District, and/or any one of the 31 municipalities, including the City of Garden Grove, which are responsible for compliance with the terms of the NPDES permit.

"DAMP" means the Orange County Drainage Area Management Plan, as the same may be amended from time to time.

"Development project guidance" means DAMP Chapter VII and the appendix thereto, entitled "Best Management Practices for New Development Including Non-residential Construction Projects," as the same may be amended from time to time.

"Discharge" means any release, spill, leak, pump, flow, escape, leaching (including subsurface migration or deposition to groundwater), dumping, or disposal of any liquid, semisolid, or solid substance.

"Discharge exception" means the group of activities not restricted or prohibited by this chapter, including only:

1. Discharges composed entirely of stormwater; discharges subject to regulation under current EPA or Regional Water Quality Control Board issued NPDES permits, state general permits, or other waivers, permits, or approvals granted by an appropriate government agency; discharges from property for which best management practices set forth in the development project guidance are being implemented and followed; discharges to the stormwater drainage system from potable water line flushing, fire fighting activities, landscape irrigation systems, diverted stream flows, rising groundwater, and de minimis groundwater infiltration to the stormwater drainage system (from leaks in joints or connections or cracks in water drainage pipes or conveyance systems); discharges from potable water sources, passive foundation drains, air conditioning condensation and other building roof runoff; agricultural irrigation water runoff; water from crawl space pumps, passive footing drains, lawn watering, noncommercial vehicle washing; flows from riparian habitats and wetlands; dechlorinated swimming pool discharges; discharges of reclaimed water generated by a lawfully permitted water treatment facility; street wash waters when related to cleaning and maintenance by, or on behalf of, the City; discharges authorized pursuant to a permit issued under Section6.40.080 hereof; discharges for which the discharger has reduced to the extent feasible the amount of pollutants in such discharge; and discharges authorized pursuant to federal or state laws or regulations.

2. In any action taken to enforce this chapter, the burden shall be on the person who is the subject of such action to establish that a discharge was within the scope of this discharge exception.

"Enforcing attorney" means the City Attorney or District Attorney acting as counsel to the City of Garden Grove and his or her designee, which counsel is authorized to take enforcement action as described in this chapter. For purposes of criminal prosecution, only the District Attorney (and/or City Attorney), or his or her designee, shall act as the enforcing attorney.

"EPA" means the Environmental Protection Agency of the United States.

"Hearing officer" means the City Manager or his or her designee who shall preside at the administrative hearings authorized by this chapter and issue final decisions on the matters raised therein.

"Illicit connection" means any man-made conveyance or drainage system, pipeline, conduit, inlet, or outlet through which the discharge of any pollutant to the stormwater drainage system occurs or may occur. The term "illicit connection" shall not include legal nonconforming connections or connections to the stormwater drainage system that are hereinafter authorized by the agency with jurisdiction over the system at the location at which the connection is made.

"Industrial discharger" means industries whose Standard Industrial Classification (SIC) codes are identified by the State Water Resources Control Board as requiring coverage under the State's general industrial NPDES stormwater permit.

"Invoice for costs" means the actual costs and expenses of the City, including but not limited to administrative overhead, salaries and other expenses recoverable under state law, incurred during any inspection conducted pursuant to

Section 6.40.060 or where a notice of noncompliance, administrative compliance order, or other enforcement option under Section 6.40.070 is utilized to obtain compliance with this chapter.

"Legal nonconforming connection" means connections to the stormwater drainage system existing as of the adoption of this chapter that were in compliance with all federal, state, and local rules, regulations, statutes, and administrative requirements in effect at the time the connection was established, including but not limited to any discharge permitted pursuant to the terms and conditions of an individual discharge permit issued pursuant to the Industrial Waste Ordinance, County Ordinance No. 703.

"New development" means all public and private residential (whether single-family, multi-unit, or planned unit development), industrial, commercial, retail, and other nonresidential construction projects, or grading for future construction, for which either a discretionary land use approval, grading permit, building permit, or nonresidential plumbing permit is required.

"Nonresidential plumbing permit" means a plumbing permit authorizing the construction and/or installation of facilities for the conveyance of liquids other than stormwater, potable water, reclaimed water, or domestic sewage.

"NPDES permit" means the currently applicable municipal discharge permit issued by the Regional Water Quality Control Board, Santa Ana Region, which permit establishes waste discharge requirements applicable to stormwater runoff in the City;

"Person" means any natural person as well as any corporation, partnership, government entity or subdivision, trust, estate, cooperative association, joint venture, business entity, or other similar entity, or the agent, employee, or representative of any of the above.

"Pollutant" means any liquid, solid, or semisolid substances, or combination thereof, including and not limited to:

1. Artificial materials (such as floatable plastics, wood products, or metal shavings).

2. Household waste (such as trash, paper, and plastics; cleaning chemicals; yard wastes; animal fecal materials; used oil and fluids from vehicles, lawn mowers, and other common household equipment).

3. Metals and nonmetals, including compounds of metals and nonmetals (such as cadmium, lead, zinc, copper, silver, nickel, chromium, cyanide, phosphorus, and arsenic), with characteristics that cause an adverse effect on living organisms.

4. Petroleum and related hydrocarbons (such as fuels, lubricants, surfactants, waste oils, solvents, coolants, and grease).

5. Animal wastes (such as discharge from confinement facilities, kennels, pens, and recreational facilities, including stables, show facilities, or polo fields).

6. Substances having a pH less than 6.5 or greater than 8.6, or unusual coloration, turbidity, or odor.

7. Waste materials and wastewater generated on construction sites and by construction activities (such as painting and staining; use of sealants and glues; use of lime; use of wood preservatives and solvents; disturbance of asbestos fibers, paint flakes, or stucco fragments; application of oils, lubricants, hydraulic, radiator, or battery fluids; construction equipment washing; concrete pouring and cleanup; use of concrete detergents; steam cleaning or sand blasting; use of chemical degreasing or diluting agents; and use of super chlorinated water for potable water line flushing).

8. Materials causing an increase in biochemical oxygen demand, chemical oxygen demand, or total organic carbon.

9. Materials that contain base/neutral or acid extractable organic compounds.

10. Those pollutants defined in Section 1362(6) of the Federal Clean Water Act.

11. Any other constituent or material, including but not limited to pesticides, herbicides, fertilizers, fecal coliform, fecal streptococcus, or enterococcus, or eroded soils, sediment, and particulate materials, in quantities that will interfere with or adversely affect the beneficial uses of the receiving waters, flora, or fauna of the state.

"Prohibited discharge" means any discharge that contains any pollutant, from public or private property to:

1. The stormwater drainage system.

2. Any upstream flow that is tributary to the stormwater drainage system.

3. Any groundwater, river, stream, creek, wash, or dry weather arroyo, wetlands area, marsh, coastal slough.

4. Any coastal harbor, bay, or the Pacific Ocean.

5. The term "prohibited discharge" shall not include discharges allowable under the discharge exception.

"Significant reconstruction" means the rehabilitation or reconstruction of public or private residential (whether single-family, multi-unit, or planned unit development), industrial, commercial, retail, or other nonresidential structures, for which either a discretionary land use approval, grading permit, building permit, or nonresidential plumbing permit is required.

"State general permit" means the state general industrial stormwater permit, the state general construction permit, or any other state general permit that has been or will be adopted and the terms and requirements of any such permit. In the event the U.S. Environmental Protection Agency (EPA) revokes the in-lieu permitting authority of the State Water Resources Control Board, then the term "state general permit" shall also refer to any EPA administered stormwater control program for industrial and construction activities.

"Stormwater drainage system" means street gutter, channel, storm drain, constructed drain, lined diversion structure, wash area, inlet, outlet, or other facility that is a part of or tributary to the county-wide stormwater runoff system and owned, operated, maintained, or controlled by County of Orange, the Orange County Flood Control District, or any co-permittee city, and used for the purpose of collecting, storing, transporting, or disposing of stormwater.

"Stormwater Pollution Prevention Plan (SWPPP)" means a plan to:

1. Help identify the sources of pollution that affect the quality of storm-water discharges and authorized non-stormwater discharges, and

2. To describe and ensure the implementation of BMPs to reduce or prevent pollutants in stormwater discharges and authorized non-stormwater discharges.

"Local Implementation Plan" means the City of Garden Grove National Pollutant Discharge Elimination System (NPDES) Stormwater Permit Local Implementation Plan as approved by the City Council on June 10, 2003, and as may be amended from time to time. (2803 § 1, 2011; 2603 § 1, 2003; 2401 § 1, 1997)

6.40.040 Prohibition on Illicit Connections and Prohibited Discharges

No person shall:

A. Construct, maintain, operate, and/or utilize any illicit connection;

B. Cause, allow, or facilitate any prohibited discharge;

C. Act, cause, permit, or suffer any agent, employee or independent contractor, to construct, maintain, operate or utilize any illicit connection, or cause, allow, or facilitate any prohibited discharge. (2803 § 1, 2011; 2401 § 1, 1997)

6.40.050 Controls for Water Quality Management

A. NEW DEVELOPMENT AND SIGNIFICANT RECONSTRUCTION.

1. All new development and significant reconstruction within the City shall be undertaken in accordance with the DAMP, including but not limited to the development project guidance, the local development plan, and/or administrative rules and practices as may be adopted from time to time by the City Manager or his or her designee.

2. Prior to the issuance by the City of a grading permit, building permit, or nonresidential plumbing permit for any new development or significant reconstruction, the City shall review the project plans and impose terms, conditions and requirements on the project in accordance with Section 6.40.050(A)(1).

3. Compliance with the conditions and requirements of the DAMP shall not exempt any person from the requirement to independently comply with each provision of this chapter.

4. The owner of a new development or significant reconstruction project, or upon transfer of the property, its successors and assigns, shall implement and adhere to the terms, conditions, and requirements imposed pursuant to Section 6.40.050(A)(1) on a new development or significant reconstruction project.

Each failure by the owner of the property or its successors or assigns, to implement and adhere to the terms, conditions, and requirements imposed pursuant to Section6.40.050(A)(1) on a new development or significant reconstruction project shall constitute a violation of this chapter.

B. COST RECOVERY. The City shall be reimbursed by the project applicant for all costs and expenses incurred by the City in the review of new development or significant development projects for compliance with the DAMP. The City may elect to require a deposit of estimated costs and expenses, and the actual costs and expenses shall be deducted from the deposit, and the balance, if any, refunded to the project applicant.

C. LITTER CONTROL. No person shall discard any waste material, including but not limited to common household rubbish or garbage of any kind (whether generated or accumulated at a residence, business, or other location), upon any public property, whether occupied, open, or vacant, including but not limited to any street, sidewalk, alley, right-of-way, open area, or point of entry to the stormwater drainage system. (2803 § 1, 2011; 2603 § 2, 2003; 2401 § 1, 1997)

6.40.060 Inspections

A. SCOPE OF INSPECTIONS.

1. RIGHT TO INSPECT. Prior to commencing any inspection as authorized in this section, the authorized inspector shall obtain either the consent of the owner or occupant of the property or shall obtain an administrative inspection warrant or criminal search warrant.

2. ENTRY TO INSPECT. The authorized inspector may enter property to investigate the source of any discharge to any public street, inlet, gutter, storm drain, or the stormwater drainage system located within the jurisdiction of the City.

3. COMPLIANCE ASSESSMENTS. The authorized inspector may inspect property for the purpose of verifying compliance with this chapter, including but not limited to:

a. Identifying products produced, processes conducted, chemicals used, and materials stored on or contained within the property;

b. Identifying point(s) of discharge of all wastewater, process water systems, and pollutants;

c. Investigating the natural slope at the location, including drainage patterns and man-made conveyance systems;

d. Establishing the location of all points of discharge from the property, whether by surface runoff or through a storm drain system;

e. Locating any illicit connection or the source of prohibited discharge;

f. Evaluating compliance with any permit issued pursuant to Section 6.40.080 hereof; and

g. Investigating the condition of any legal nonconforming connection.

4. PORTABLE EQUIPMENT. For purposes of verifying compliance with this chapter, the authorized inspector may inspect any vehicle, truck, trailer, tank truck, or other mobile equipment.

5. RECORDS REVIEW. The authorized inspector may inspect all records of the owner or occupant of property relating to chemicals or processes presently or previously occurring on-site, including material and/or chemical inventories, facilities maps or schematics and diagrams, Material Safety Data Sheets, hazardous waste manifests, business plans, pollution prevention plans, state general permits, stormwater pollution prevention plans, monitoring program plans, and any other record(s) relating to illicit connections, prohibited discharges, a legal nonconforming connection, or any other source of contribution or potential contribution of pollutants to the stormwater drainage system.

6. SAMPLE AND TEST. The authorized inspector may inspect, sample, and test any area runoff, soils area (including groundwater testing), process discharge, materials within any waste storage area (including any container contents), and/or treatment system discharge for the purpose of determining the potential for contribution of pollutants to

the stormwater drainage system. The authorized inspector may investigate the integrity of all storm drain and sanitary sewer systems, any legal nonconforming connection, or other pipelines on the property using appropriate tests, including but not limited to smoke and dye tests or video surveys. The authorized inspector may take photographs or videotape, make measurements or drawings, and create any other record reasonably necessary to document conditions on the property.

7. MONITORING. The authorized inspector may erect and maintain monitoring devices for the purpose of measuring any discharge or potential source of discharge to the stormwater drainage system. (2803 § 1, 2011; 2401 § 1, 1997)

6.40.070 Enforcement

A. ADMINISTRATIVE REMEDIES.

1. NOTICE OF NONCOMPLIANCE. The authorized inspector may deliver to the owner or occupant of any property, or to any person responsible for an illicit connection or prohibited discharge a notice of noncompliance. The notice of noncompliance shall be delivered in accordance with Section 6.40.070(A)(5).

a. The notice of noncompliance shall identify the provision(s) of this chapter or the applicable permit that has been violated. The notice of noncompliance shall state that continued noncompliance may result in additional enforcement actions against the owner, occupant, and/or person.

b. The notice of noncompliance shall state a compliance date that must be met by the owner, occupant, and/or person, provided, however, that the compliance date may not exceed seven days unless the authorized inspector extends the compliance deadline where good cause exists for the extension.

2. ADMINISTRATIVE COMPLIANCE ORDERS.

a. The authorized inspector may issue an administrative compliance order. The administrative compliance order shall be delivered in accordance with Section6.40.070(A)(5). The administrative compliance order may be issued to:

i. The owner or occupant of any property requiring abatement of conditions on the property that cause or may cause a prohibited discharge or an illicit connection in violation of this chapter.

ii. The owner of property subject to terms, conditions, or requirements imposed on a project in accordance with Section 6.40.070(A)(1) to ensure adherence to those terms, conditions, and requirements.

iii. A permittee subject to the requirements of any permit issued pursuant to Section 6.40.080 hereof to ensure compliance with the terms, conditions, and requirements of the permit.

iv. Any person responsible for an illicit connection or prohibited discharge.

b. The administrative compliance order may include the following terms and requirements:

i. Specific steps and time schedules for compliance as reasonably necessary to eliminate an existing prohibited discharge or to prevent the imminent threat of a prohibited discharge, including but not limited to a prohibited discharge from any pond, pit, well, surface impoundment, holding, or storage area.

ii. Specific steps and time schedules for compliance as reasonably necessary to discontinue any illicit connection.

iii. Specific requirements for containment, cleanup, removal, storage, installation of overhead covering, or proper disposal of any pollutant having the potential to contact stormwater runoff.

iv. Any other terms or requirements reasonably calculated to prevent the imminent threat of or continuing violations of this chapter, including, but not limited to requirements for compliance with best management practices guidance documents promulgated by any federal, State of California or regional agency.

v. Any other terms or requirements reasonably calculated to achieve full compliance with the terms, conditions, and requirements of any permit issued pursuant hereto.

3. CEASE AND DESIST ORDERS.

a. The authorized inspector may issue a cease and desist order. A cease and desist order shall be delivered in accordance with Section 6.40.070(A)(5). A cease and desist order may direct the owner or occupant of any property and/or other person responsible for a violation of this chapter to:

i. Immediately discontinue any illicit connection or prohibited discharge to the stormwater drainage system.

ii. Immediately contain or divert any flow of water off the property, where the flow is occurring in violation of any provision of this chapter.

iii. Immediately discontinue any other violation of this chapter.

iv. Clean up the area affected by the violation.

v. The authorized inspector may direct by cease and desist order that the owner of any property, or his or her successor-in-interest, whose property is subject to any conditions or requirements issued pursuant to Section 6.40.050(A)(1) or any permittee under any permit issued pursuant to Section 6.40.080 hereof: Immediately cease any activity not in compliance with the conditions or requirements issued pursuant to Section 6.40.050(A)(1), or the terms, conditions, and requirements of the applicable permit.

4. RECOVERY OF COSTS. The authorized inspector may deliver to the owner or occupant of any property, any permittee, or any other person who becomes subject to a notice of noncompliance or administrative order, an invoice for costs. An invoice for costs shall be delivered in accordance with Section 6.40.070(A)(5). An invoice for costs shall be immediately due and payable to the City for the actual costs incurred by the City in issuing and enforcing any notice or order.

If any owner or occupant, permittee, or any other person subject to an invoice for costs fails to either pay the invoice for costs or appeal successfully the invoice for costs in accordance with Section 6.40.070(A)(6), then the enforcing attorney may institute collection proceedings.

5. DELIVERY OF NOTICE. Any notice of noncompliance, administrative compliance order, cease and desist order, or invoice of costs to be delivered pursuant to the requirements of this chapter shall be subject to the following:

a. The notice shall state that the recipient has a right to appeal the matter as set forth in Section 6.40.070(A)(6) through 6.40.070(A)(10).

b. Delivery shall be deemed complete upon:

i. Personal service to the recipient;

ii. Deposit in the U.S. mail, postage pre-paid for first class mail; or

iii. Facsimile service with confirmation of receipt.

c. Where the recipient of notice is the owner of the property, the address for notice shall be the address from the most recently issued equalized assessment roll for the property or as otherwise appears in the current records of the City.

d. Where the owner or occupant of any property cannot be located after the reasonable efforts of the authorized inspector, a notice of noncompliance or cease and desist order shall be deemed delivered after posting on the property for a period of 10 business days.

6. ADMINISTRATIVE HEARING FOR NOTICES OF NONCOMPLIANCE, ADMINISTRATIVE COMPLIANCE ORDERS, INVOICES FOR COSTS AND ADVERSE DETERMINATIONS. Except as set forth in subsection (A)(8) of this section, any person receiving a notice of noncompliance, administrative compliance order, a notice of legal nonconforming connection, an invoice for costs, or any person who is subject to any adverse determination made pursuant to this chapter, may appeal the matter by requesting an administrative hearing. Notwithstanding the foregoing, these administrative appeal procedures shall not apply to criminal proceedings initiated to enforce this chapter.

7. REQUEST FOR ADMINISTRATIVE HEARING. Any person appealing a notice of noncompliance, an administrative compliance order, a notice of legal nonconforming connection, an invoice for costs or an adverse determination shall, within 30 days of receipt thereof, file a written request for an administrative hearing, accompanied by an administrative hearing fee as established by separate City Council resolution, with the office of the City Clerk, with a copy of the request for administrative hearing mailed on the date of filing to the City Manager. Thereafter, a hearing on the matter shall be held before the hearing officer within 45 business days of the date of filing of the written request

unless, in the reasonable discretion of the hearing officer and pursuant to a written request by the appealing party, a continuance of the hearing is granted.

8. ADMINISTRATIVE HEARING FOR CEASE AND DESIST ORDERS AND EMERGENCY ABATEMENT ACTIONS. An administrative hearing on the issuance of a cease and desist order or following an emergency abatement action shall be held within five business days following the issuance of the order or the action of abatement, unless the hearing (or the time requirement for the hearing) is waived in writing by the party subject to the cease and desist order or the emergency abatement. A request for an administrative hearing shall not be required from the person subject to the cease and desist order or the emergency abatement action.

9. HEARING PROCEEDINGS. The authorized inspector shall appear in support of the notice, order, determination, invoice for costs, or emergency abatement action, and the appealing party shall appear in support of withdrawal of the notice, order, determination, invoice for costs, or in opposition to the emergency abatement action. Except as set forth in Section 6.40.030 (definition of "discharge exception"), the City shall have the burden of supporting any enforcement or other action by a preponderance of the evidence. Each party shall have the right to present testimony and other documentary evidence as necessary for explanation of the case.

10. FINAL DECISION AND APPEAL. The final decision of the hearing officer shall issue within 10 business days of the conclusion of the hearing and shall be delivered by first-class mail, postage prepaid, to the appealing party. The final decision shall include notice that any legal challenge to the final decision shall be made pursuant to the provisions of Code of Civil Procedure Sections 1094.5 and 1094.6 and shall be commenced within 90 days following issuance of the final decision. The administrative hearing fee paid by a prevailing party in an appeal shall be refunded.

Notwithstanding this section, the final decision of the hearing officer in any proceeding determining the validity of a cease and desist order or following an emergency abatement action shall be mailed within five business days following the conclusion of the hearing.

11. CITY ABATEMENT. In the event the owner of property, the operator of a facility, a permittee, or any other person fails to comply with any provision of a compliance schedule issued to such owner, operator, permittee, or person pursuant to this chapter, the authorized inspector may request the enforcing attorney to obtain an abatement warrant or other appropriate judicial authorization to enter the property, abate the condition, and restore the area. Any costs incurred by the City in obtaining and carrying out an abatement warrant or other judicial authorization may be recovered pursuant to Section 6.40.070(B)(4).

B. NUISANCE. Any condition in violation of the prohibitions of this chapter, including but not limited to the maintenance or use of any illicit connection or the occurrence of any prohibited discharge, shall constitute a threat to the public health, safety, and welfare, and is declared and deemed a nuisance pursuant to Government Code Section 38771.

1. COURT ORDER TO ENJOIN OR ABATE. At the request of the City Manager, the enforcing attorney may seek a court order to enjoin and/or abate the nuisance.

2. NOTICE TO OWNER AND OCCUPANT. Prior to seeking any court order to enjoin or abate a nuisance or threatened nuisance, the City Manager shall provide notice of the proposed injunction or abatement to the owner and occupant, if any, of the property where the nuisance or threatened nuisance is occurring.

3. EMERGENCY ABATEMENT. In the event the nuisance constitutes an imminent danger to public safety or the environment, the City Manager may enter the property from which the nuisance emanates, abate the nuisance, and restore any property affected by the nuisance. To the extent reasonably practicable, informal notice shall be provided to the owner or occupant prior to abatement. If necessary to protect the public safety or the environment, abatement may proceed without prior notice to or consent from the owner or occupant thereof and without judicial warrant.

a. An imminent danger shall include, but is not limited to, exigent circumstances created by the dispersal of pollutants, where the same presents a significant and immediate threat to the public safety or the environment.

b. Notwithstanding the authority of the City to conduct an emergency abatement action, an administrative hearing pursuant to Section 6.40.070(A)(8) hereinabove shall follow the abatement action.

4. REIMBURSEMENT OF COSTS. All costs incurred by the City in responding to any nuisance, all administrative expenses, and all other expenses recoverable under state law, shall be recoverable from the person(s) creating, causing, committing, permitting, or maintaining the nuisance.

5. NUISANCE LIEN. All costs shall become a lien against the property from which the nuisance emanated and a personal obligation against the owner thereof in accordance with Government Code Sections 38773.1 and 38773.5. The owner of record of the property subject to any lien shall be given notice of the lien prior to recording as required by Government Code Section 38773.1.

At the direction of the City Manager, the enforcing attorney is authorized to collect nuisance abatement costs or enforce a nuisance lien in an action brought for a money judgment or by delivery to the County Assessor of a special assessment against the property in accord with the conditions and requirements of Government Code§38773.5.

C. CRIMINAL SANCTIONS.

1. PROSECUTOR. The enforcing attorney may act on the request of the City Manager to pursue enforcement actions in accordance with the provisions of this chapter.

2. INFRACTIONS. Any person who may otherwise be charged with a misdemeanor under this chapter may be charged, at the discretion of the enforcing attorney, with an infraction punishable by a fine of not more than $250.00 for a first violation, $500.00 for a second violation, and a fine not exceeding $1,000.00 for each additional violation occurring within one year.

3. MISDEMEANORS. Any person who negligently or knowingly violates any provision of this chapter, undertakes to conceal any violation of this chapter, continues any violation of this chapter after notice thereof, or violates the terms, conditions, and requirements of any permit issued pursuant to this chapter, shall be guilty of a misdemeanor punishable by a fine of not more than $1,000.00 or by imprisonment for a period of not more than six months, or both.

D. CONSECUTIVE VIOLATIONS. Each day in which a violation occurs and each separate failure to comply with either a separate provision of this chapter, an administrative compliance order, a cease and desist order, or a permit issued pursuant to this chapter, shall constitute a separate violation of this chapter punishable by fines or sentences issued in accordance with this chapter.

E. NONEXCLUSIVE REMEDIES. Each and every remedy available for the enforcement of this chapter shall be nonexclusive and it is within the discretion of the authorized inspector or enforcing attorney to seek cumulative remedies, except that multiple monetary fines or penalties shall not be available for any single violation of this chapter.

F. CITATIONS.

1. Pursuant to Penal Code Section 836.5, the authorized inspector shall have the authority to cause the arrest of any person committing a violation of this chapter. The person shall be released and issued a citation to appear before a magistrate in accordance with Penal Code Sections 853.5, 853.6, and 853.9, unless the person demands to be taken before a magistrate. Following issuance of any citation the authorized inspector shall refer the matter to the enforcing attorney.

2. Each citation to appear shall state the name and address of the violator, the provisions of this chapter violated, and the time and place of appearance before the court, which shall be at least 10 business days after the date of violation. The person cited shall sign the citation giving his or her written promise to appear as stated therein. If the person cited fails to appear, the enforcing attorney may request issuance of a warrant for the arrest of the person cited.

G. VIOLATIONS OF OTHER LAWS. Any person acting in violation of this chapter also may be acting in violation of the Federal Clean Water Act or the State Porter-Cologne Act and other laws and also may be subject to sanctions including civil liability. Accordingly, the enforcing attorney is authorized to file a citizen suit pursuant to the Federal Clean Water Act Section 505(a), seeking penalties, damages, and orders compelling compliance, and other appropriate relief. The enforcing attorney may notify EPA Region IX, the Santa Ana Regional Water Quality Control Board, or any other appropriate state or local agency, of any alleged violation of this chapter.

H. INJUNCTIONS. At the request of the City Manager, the enforcing attorney may cause the filing in a court of competent jurisdiction of a civil action seeking an injunction against any threatened or continuing noncompliance with the provisions of this chapter.

Order for Reimbursement. Any temporary, preliminary, or permanent injunction issued pursuant hereto may include an order for reimbursement to the City of all costs incurred in enforcing this chapter, including costs of inspection, investigation, and monitoring, the costs of abatement undertaken at the expense of the City, costs relating to restoration of the environment and all other expenses as authorized by law.

I. OTHER CIVIL REMEDIES.

1. The City Manager may cause the enforcing attorney to file an action for civil damages in a court of competent jurisdiction seeking recovery of:

a. All costs incurred in enforcement of this chapter, including but not limited to costs relating to investigation, sampling, monitoring, inspection, administrative expenses, all other expenses as authorized by law, and consequential damages;

b. All costs incurred in mitigating harm to the environment or reducing the threat to human health; and

c. Damages for irreparable harm to the environment.

2. The enforcing attorney is authorized to file actions for civil damages resulting from any trespass or nuisance occurring on public land or to the stormwater drainage system from any violation of this chapter where the same has caused damage, contamination or harm to the environment, public property, or the stormwater drainage system.

3. The remedies available to the City pursuant to the provisions of this chapter shall not limit the right of the City to seek any other remedy that may be available by law. (2803 § 1, 2011; 2401 § 1, 1997)

6.40.080 Permits

A. DISCHARGE PERMIT PROCEDURE.

1. PERMIT. On application of the owner of property or the operator of any facility, which property or facility is not otherwise subject to the requirements of a state general permit or a national pollution discharge elimination system permit regulating stormwater discharges, the City Manager may issue a permit authorizing the release of non-stormwater discharges to the stormwater drainage system if:

a. The discharge of material or constituents is reasonably necessary for the conduct of otherwise legal activities on the property; and

b. The discharge will not cause a nuisance, impair the beneficial uses of receiving waters, or cause any reduction in established water quality standards.

2. APPLICATION. The applicant shall provide all information requested by the City Manager for review and consideration of the application, including but not limited to specific detail as to the activities to be conducted on the property, plans and specifications for facilities located on the property, identification of equipment or processes to be used on-site and other information as may be requested in order to determine the constituents, and quantities thereof, which may be discharged if permission is granted.

3. PERMIT ISSUANCE. The permit shall be granted or denied by the City Manager or his or her designated representative, no later than 60 business days following the completion and acceptance of the application as determined by the City Manager.

The applicant shall be notified in person or by first-class mail, postage prepaid, of the action taken.

4. PERMIT CONDITIONS. The permit may include terms, conditions, and requirements to ensure compliance with the objectives of this chapter and as necessary to protect the receiving waters, including but not limited to:

a. Identification of the discharge location on the property and the location at which the discharge will enter the stormwater drainage system;

b. Identification of the constituents and quantities thereof to be discharged into the stormwater drainage system;

c. Specification of pollution prevention techniques and structural or nonstructural control requirements as reasonably necessary to prevent the occurrence of potential discharges in violation of this chapter;

d. Requirements for self-monitoring of any discharge;

e. Requirements for submission of documents or data, such as technical reports, production data, discharge reports, self-monitoring reports, and waste manifests; and

f. Other terms and conditions appropriate to ensure compliance with the provisions of this chapter and the protection of receiving waters, including requirements for compliance with best management practices guidance documents approved by any federal, State of California or regional agency.

5. GENERAL PERMIT. In the discretion of the City Manager, the permit may, in accordance with the conditions identified in Section 6.40.080(A)(4), be prepared as a general permit applicable to a specific category of activities. If a general permit is issued, any person intending to discharge within the scope of the authorization provided by the general permit may do so by filing an application to discharge with the City Manager. No discharge within the scope of the general permit shall occur until such application is so filed.

Notwithstanding the foregoing in Section 6.40.080(A)(5), the City Manager, in his or her discretion, may eliminate the requirement that an application for a general permit be filed for any specific activity for which a general permit has been issued.

6. PERMIT FEES. The permission to discharge shall be conditioned upon the applicant's payment of the City's costs, in accordance with a fee schedule adopted by separate resolution, as follows:

a. For individually issued permits, the costs of reviewing the permit application, preparing and issuing the permit, and the costs reasonably related to administrating this permit program; and

b. For general permits, the costs of reviewing the permit application, that portion of the costs of preparing the general permit that is reasonably attributable to the permittee's application for the general permit, and the costs reasonably related to administering the general permit program. Notwithstanding the foregoing, no permit fee shall be charged for a general permit issued pursuant to Section 6.40.080(A)(5)(a).

B. PERMIT SUSPENSION, REVOCATION, OR MODIFICATION.

1. The City Manager may suspend or revoke any permit when it is determined that:

a. The permittee has violated any term, condition or requirement of the permit or any applicable provision of this chapter;

b. The permittee's discharge or the circumstances under which the discharge occurs have changed so that it is no longer appropriate to except the discharge from the prohibitions on prohibited discharge contained within this chapter; or

c. The permittee fails to comply with any schedule for compliance issued pursuant to this chapter; or

d. Any regulatory agency, including the EPA or a Regional Water Quality Control Board having jurisdiction over the discharge, notifies the City that the discharge should be terminated.

2. The City Manager may modify any permit when it is determined that:

a. Federal or state law requirements have changed in a manner that necessitates a change in the permit; or

b. The permittee's discharge or the circumstances under which the discharge occurs have changed so that it is appropriate to modify the permit's terms, conditions, or requirements; or

c. A change to the permit is necessary to ensure compliance with the objectives of this chapter or to protect the quality of receiving waters.

3. The permittee, or in the case of a general permit, each person who has filed an application pursuant to Section 6.40.080(A)(5), shall be informed of any change in the permit terms and conditions at least 60 days prior to the effective date of the modified permit. In the case of a general permit issued pursuant to Section 6.40.080(A)(5)(a), any change in the permit terms and conditions shall be published in newspaper of general circulation within the City at least 60 days prior to the effective date of the modified permit.

4. The determination that a permit shall be denied, suspended, revoked, or modified may be appealed by a permittee pursuant to the same procedures applicable to appeal of an administrative compliance order in this chapter. In the absence of a judicial order to the contrary, the permittee may continue to discharge pending issuance of the final administrative decision by the hearing officer.

C. PERMIT ENFORCEMENT — PENALTIES. Any violation of the terms, conditions, and requirements of any permit issued by the City Manager shall constitute a violation of this chapter and subject the violator to the administrative, civil, and criminal remedies available under this chapter.

D. Compliance with the terms, conditions, and requirements of a permit issued pursuant to this chapter shall not relieve the permittee from compliance with all federal, state, and local laws, regulations and permit requirements, applicable to the activity for which the permit is issued.

1. LIMITED PERMITTEE RIGHTS. Permits issued under this chapter are for the person or entity identified therein as the "permittee" only, and authorize the specific operation at the specific location identified in the permit. The issuance of a permit does not vest the permittee with a continuing right to discharge.

2. TRANSFER OF PERMITS. No permit issued to any person may be transferred to allow:

a. A discharge to the stormwater drainage system at a location other than the location stated in the original permit; or

b. A discharge by a person other than the person named in the permit, provided however, that the City may approve a transfer if written approval is obtained, in advance, from the City Manager. (2803 § 1, 2011; 2401 § 1, 1997)

6.40.090 Interagency Cooperation

A. The City intends to cooperate with other agencies with jurisdiction over stormwater discharges to ensure that the regulatory purposes underlying stormwater regulations promulgated pursuant to the Clean Water Act (33 USC Section 1251 et seq.) are met.

B. The City may, to the extent authorized by law, elect to contract for the services of any public agency or private enterprise to carry out the planning approvals, inspections, permits, and enforcement authorized by this chapter. (2803 § 1, 2011; 2401 § 1, 1997)

6.40.100 Miscellaneous

A. COMPLIANCE DISCLAIMER. Full compliance by any person or entity with the provisions of this chapter shall not preclude the need to comply with other local, state, or federal statutory or regulatory requirements, which may be required for the control of the discharge of pollutants into stormwater and/or the protection of stormwater quality.

B. SEVERABILITY. If any provision of this chapter or the application of the chapter to any circumstance is held invalid, the remainder of the chapter or the application of the chapter to other persons or circumstances shall not be affected. (2803 § 1, 2011; 2401 § 1, 1997)

6.40.110 Judicial Review

The provisions of Sections 1094.5 and 1094.6 of the Code of Civil Procedure set forth the procedure for judicial review of any act taken pursuant to this chapter. Parties seeking judicial review of any action taken pursuant to this chapter shall file such action within 90 days of the occurrence of the event for which review is sought. (2803 § 1, 2011; 2401 § 1, 1997)

Appendix C-3

Ordinance No. 6 (FOG Requirements)

ORDINANCE NO. 6

AN ORDINANCE OF THE BOARD OF DIRECTORS OF THE GARDEN GROVE SANITARY DISTRICT ADOPTING FATS, OILS AND GREASE CONTROL REGULATIONS APPLICABLE TO FOOD SERVICE ESTABLISHMENTS

WHEREAS, pursuant to the County Sanitary District Act , Health & Safety Code §§ 4700 et seq., the Garden Grove Sanitary District ("District") has the authority to adopt ordinances relating to the provision of sewer services and facilities, and regulations of those services and facilities; and

WHEREAS, the Regional Water Quality Control Board ("RWQCB") for the Santa Ana Region adopted Order R8-2002-0014, which prescribes general waste discharge requirements prohibiting sanitary sewer overflows ("SSOs") by sewer collection agencies; and

WHEREAS, in Order R8-2002-0014, the RWQCB found that one of the leading causes of SSOs within the Santa Ana Region, which encompasses the District's service area is "grease blockages;" and

WHEREAS, SSOs often caused by discharge of wastewater containing high levels of fat, oils and grease ("FOG"), suspended solids, pathogenic organisms, and other pollutants, may result in the temporary failure to meet applicable water quality objectives, pose a threat to the public health, adversely affect aquatic life, and impair the public recreational use and aesthetic enjoyment of surface waters within the District's service area; and

WHEREAS, the 2000-2001 Orange County Grand Jury ("Grand Jury") conducted a survey among 35 wastewater collection and treatment agencies in Orange County and concluded that one of the leading causes of SSOs and sewage spills is sewer lines clogged from the accumulation of FOG discharged from Food Service Establishments; and

WHEREAS, the Grand Jury further concluded that more effective methods of minimizing grease discharges into the sewer system must be developed and implemented to reduce the discharge of FOG to the sewer system in order to prevent sewer blockages and SSOs; and

WHEREAS, Order No. R8-2002-0014 requires the District to monitor and control SSOs and to develop a FOG Control Program by December 30, 2004; and

WHEREAS, in light of the overwhelming evidence that FOG is a primary cause of SSOs, the District desires to implement a FOG Control Program to prevent SSOs; and

WHEREAS, the foregoing findings indicate that a FOG Control Program is required for Food Service Establishments within the District's jurisdiction to comply with waste discharge regulations and prevent the harmful effects of SSOs; and

WHEREAS, the Board of Directors finds that specific enforcement provisions must be adopted to govern discharges of wastewater to the District's system by Food Service Establishments.

NOW, THEREFORE**,** the Board of Directors does hereby ordain as follows:

Section I. Amendment To Code Of Regulations.

Chapter 4.30, entitled "Regulations Controlling the Discharge of Fats, Oils, and Grease From Food Service Establishments", is hereby added to Title 4, "Sewer Regulations" of the Garden Grove Sanitary District Code of Regulations (2004 Edition) to read as follows:

"Chapter 4.30. Regulations Controlling the Discharge of Fats, Oils

And Grease From Food Service Establishments.

Section 4.30.010. PURPOSE AND POLICY

A. The purpose of this Ordinance is to facilitate the maximum beneficial public use of the District's sewer services and facilities while preventing blockages of the sewer lines resulting from discharges of FOG to the sewer facilities, and to specify appropriate FOG discharge requirements for Food Service Establishments.

B. This Ordinance shall be interpreted in accordance with the definitions set forth in Section 16. The provisions of this Ordinance shall apply to the direct or indirect discharge of all wastewater or waste containing FOG carried to the sewer facilities of the District.

C. To comply with Federal, State, and local policies and to allow the District to meet applicable standards, provisions are made in this Ordinance for the regulations of wastewater or waste containing FOG discharges to the sewer facilities.

D. This Ordinance establishes quantity and quality standards on all wastewater and/or waste discharges containing FOG, which may alone or collectively cause or contribute to FOG accumulation in the sewer facilities causing or potentially causing or contributing to the occurrence of SSOs.

Section 4.30.020. FOG DISCHARGE REQUIREMENT

No person, firm, corporation, or other entity shall operate a Food Service establishment so as to discharge or cause to be discharged into the sanitary sewer

collection system FOG that: (1) exceeds a concentration level adopted by the Board; or, (2) that may accumulate and/or cause or contribute to blockages in the sewer system or at the sewer system lateral which connects the Food Service Establishment to the sanitary sewer collection system.

Section 4.30.030. PROHIBITIONS

Any person, firm, corporation, or other entity is prohibited from operating a Food Service Establishment by:

A. Installing food grinders in the plumbing system of new construction of Food Service Establishments. All food grinders shall be removed from all existing Food Service Establishments within 180 days of the effective date of this Ordinance, unless the FOG Control Program Manager has authorized the grinder to remain.

B. Introducing any additives into a Food Service Establishment's wastewater system for the purpose of emulsifying FOG, unless otherwise permitted by specific written authorization of the FOG Control Program Manager.

C. Disposing waste cooking oil into drainage pipes. All waste cooking oils shall be collected and stored properly in receptacles such as barrels or drums for recycling or other acceptable methods of disposal.

D. Discharging wastewater from dishwashers to any grease trap or grease interceptor.

E. Discharging wastewater with temperatures in excess of 140°F to any grease control device.

F. Introducing biological additives for grease remediation or as a supplement to grease control device maintenance without prior authorization from the FOG Control Program Manager.

G. Discharging wastes from toilets, urinals, washbasins, and other fixtures containing fecal materials to sewer lines intended for grease control device service, or vice versa.

H. Discharging any waste, including FOG and solid materials removed from the grease control device, to the sewer system. Grease removed from grease control devices shall be waste hauled periodically as part of the operation and maintenance requirements for grease interceptors and traps.

Section 4.30.040. BEST MANAGEMENT PRACTICES REQUIRED

Any person, firm, corporation, or other entity operating a Food Services Establishment shall implement Best Management Practices as prescribed in this ordinance for the purpose of controlling and limiting the discharge of FOG to the sanitary sewer collection system.

Section 4.30.050. FOG PRETREATMENT/BEST MANAGEMENT PRACTICES

Any person, firm, corporation, or other entity operating a Food Service Establishment (FSE), or a property owner of a parcel containing multiple FSEs, may be required to install, operate and maintain an approved type and adequately sized grease interceptor in accordance with the provisions of this section. The grease interceptor shall be adequate to separate and remove FOG contained in wastewater discharges from Food Service Establishments prior to discharge to the sewer system. Fixtures, equipment, and drain lines located in the food preparation and clean up areas of Food Service Establishments that are sources of FOG discharges except for dish washing machines shall be connected to the grease interceptor. Compliance shall be established as follows:

A. New Construction of Food Service Establishments

New construction of Food Service Establishments shall include and install grease interceptors prior to commencing discharges of wastewater to the sanitary sewer collection system.

B. Existing Food Service Establishments/Commercial Properties

Existing FSE operators, or property owners with multiple FSEs, shall install a grease control device where the FOG Program Manager has found and determined that a FSE, has been responsible for, or otherwise contributed to, one or more SSO(s) following the enactment of this ordinance.

Where the FOG Program Manager has determined that an owner's lateral line requires cleaning to avoid an imminent threat of an SSO spill, the Manager is authorized to issue an order to the owner to immediately clean the subject lateral line.

The Program Manager shall issue his/her order in writing to the applicable party and shall designate a reasonable period of time period for corrective action.

C. Best Management Practice Requirements.

Food Service Establishment Operators and affected Property Owners shall comply with the following Best Management Practice standards:

1. BMP (Non-Structural)- Food Grinders (garbage disposal devices) shall immediately be removed from the FSEs plumbing system to prevent the discharge of food debris into the FSEs sewer drain system. This requirement will lead to controlling and limiting the introduction of FOG into the district's sanitary sewer collection system.

2. BMP (Non-Structural) - The District's approved SSO prevention-training program shall be instituted and continuously maintained. The training program shall consists of those tasks set forth in the training materials
adopted by the Program Manager and made available to each FSE operator and property owner affected by this ordinance.

3. BMP (Structural)- Grease trap devices shall be installed and maintained so as to prevent odors, cross-contamination, sewer back-ups or SSOs.

4. BMP (Non-Structural)- Grease rendering containers shall be installed and Maintained.

5. BMP (Non-Structural)- Document record keeping shall be maintained consisting of: 1) employee training records; 2) grease control dev ice (trap or interceptor) maintenance and cleaning records; 3) on property SSO records; 4) plumbing maintenance records; 5) rendering grease disposal records. Documents consist of, but are not limited to logs, records, letters, blue prints, equipment specification and operation, receipts, and manifests. Such records are deemed to be environmental records and shall be retained for a minimum of 5 years.

Section 4.30.060. APPEALS/INTERCEPTOR REQUIREMENT.

Where the FOG Control Program Manager has determined to require the installation of a grease interceptor, the responsible party may appeal said determination in accordance with the following procedure and criteria:

The Appellant can establish that:

1. There is no adequate space for installation and/or maintenance of a grease interceptor.

2. There is no adequate slope for gravity flow between kitchen plumbing fixtures and the grease interceptor and/or between the grease interceptor and the private collection lines or the public sewer.

The appellant may submit an appeal from the grease interceptor requirement to the FOG Control Program Manager. The operator bears the burden of presenting sufficient facts in the application to justify falling within one or more of the above stated criteria.

The FOG Program Manager shall forthwith render a written decision on the appeal within ten (10) working days. If the Manager requires more information, the Manager is authorized to request additional needed information prior to making a

final determination on the application. In the event that the Program Manager grants an approval of the appeal, the Manager's determination shall specify the terms and conditions of the waiver thereof.

The appellant may further appeal an adverse decision by the Program Manager within fifteen (15) calendar days from date of the written decision by filing a written appeal with the District Board Secretary. The appeal shall be heard by the General Manager, or his designee, as soon as reasonably practicable. A written notice of decision shall be mailed to the appellant within 10 business days from date of the appeal hearing. The decision of the General Manager, or designee, shall be final and binding.

The above stated appeal provisions shall also be applicable to revocation of waiver approvals.

Section 4.30.070 COMMERCIAL PROPERTIES

Property owners of commercial properties or their official designee(s) shall be responsible for the installation and maintenance of the grease interceptor serving multiple Food Service Establishments that are located on a single parcel.

Section 4.30.080. SEWER SYSTEM OVERFLOWS, PUBLIC NUISANCE, ABATEMENT

If the District must act immediately to contain and clean up an SSO caused by blockage of a private or public sewer lateral or system serving a Food Service Establishment , or at the request of the property owner or operator of the Food Service Establishment, or because of the failure of the property owner or Food Service Establishment to abate the condition causing immediate threat of injury to the health, safety, welfare, or property of the public, the District's costs for such abatement may be entirely borne by the property owner or operator of the Food Service Establishment, and individual(s) as a responsible officer or owner of the Food Service Establishment(s) and may constitute a debt to the District and become due and payable upon the District's request for reimbursement of such costs.

Section 4.30.090. DRAWING SUBMITTAL REQUIREMENTS

Upon request by the District:

A. Operators of Food Service Establishments may be required to submit two copies of facility site plans, mechanical and plumbing plans, and details to show all sewer locations and connections. The submittal shall be in a form and content acceptable to the District for review of existing or proposed grease control device, grease interceptor, monitoring facilities, metering facilities, and operating procedures. The review of the plans and procedures shall in no way relieve the Food Service Establishments of the responsibility of modifying the facilities or

procedures in the future, as necessary to produce an acceptable discharge, and to meet the requirements of this Ordinance or any requirements of other Regulatory Agencies; and a schematic drawing of the FOG control device, grease interceptor or other pretreatment equipment, piping and instrumentation diagram, and wastewater characterization report.

B. The District may require the drawings be prepared by a California Registered Civil, Chemical, Mechanical, or Electrical Engineer.

Section 4.30.100. GREASE INTERCEPTOR REQUIREMENTS

A. Food Service Establishment operators shall provide wastewater acceptable to the District, under the requirements and standards established herein before discharging to any public sewer. Any Food Service Establishment required to pretreat wastewater shall install, operate, and maintain an approved type and adequately sized grease interceptor necessary to maintain compliance with the objectives of this Ordinance.

B. Grease interceptor sizing and installation shall conform to the current edition of the California Plumbing Code. Grease interceptors shall be constructed in accordance with the design approved by the FOG Control Program Manager and shall have a minimum of two compartments with fittings designed for grease retention.

C. The grease interceptor shall be installed at an exterior location where it shall be at all times easily accessible for inspection, cleaning, and removal of accumulated grease.

D. Access manholes, with a minimum diameter of 24 inches, shall be provided over each grease interceptor chamber and sanitary tee. The access manholes shall extend at least to finished grade and be designed and maintained to prevent water inflow or infiltration. The manholes shall also have readily removable covers to facilitate inspection, grease removal, and wastewater sampling activities.

E Grease Interceptors shall be maintained in efficient operating condition by periodic removal of the full content of the interceptor which includes wastewater, accumulated FOG, floating materials, sludge and solids.

F All existing and newly installed grease interceptors shall be maintained in a manner consistent with a maintenance frequency approved by the FOG Control Program Manager pursuant to this section.

G No FOG that has accumulated in a grease interceptor shall be allowed to pass into any sewer lateral, sewer system, storm drain, or public right of way.

H. Food Service Establishment operators with grease interceptors may be required to submit data and information necessary to establish the maintenance frequency of grease interceptors.

I. The maintenance frequency for all Food Service Establishments with a grease interceptor shall be determined in one of the following methods:

1. Grease interceptors shall be fully pumped out and cleaned at a frequency such that the combined FOG and solids accumulation does not exceed 25% of the total liquid depth of the grease interceptor. This is to ensure that the minimum hydraulic retention time and required available volume is maintained to effectively intercept and retain FOG discharged to the sewer system.

2. All Food Service Establishments with a Grease Interceptor shall maintain their grease interceptor not less than every 6 months. Grease interceptors shall be fully pumped out and cleaned quarterly when the frequency described in (1) has not been established. The maintenance frequency shall be adjusted when sufficient data have been obtained to establish an average frequency based on the requirements described in (1) and guidelines adopted pursuant to the FOG Control Program. The District may change the maintenance frequency at any time to reflect changes in actual operating conditions in accordance with the FOG Control Program. Based on the actual generation of FOG from the Food Service Establishment, the maintenance frequency may increase or decrease.

3. A Food Service Establishment operator may submit a request to the FOG Control Program Manager requesting a change in the maintenance frequency at any time. The operator has the responsibility to demonstrate that the requested change in frequency reflects actual operating conditions based on the average FOG accumulation over time and meets the requirements described in (1).

4. If the grease interceptor, at any time, contains FOG and solids accumulation that does not meet the requirements described in (1), the Food Service Establishment operator shall be required to have the grease interceptor serviced immediately such that all fats, oils, grease, sludge, and other materials are completely removed from the grease interceptor. If deemed necessary, the FOG Control Program Manager may also increase the maintenance frequency of the grease interceptor from the current frequency.

Section 4.30.110. GREASE TRAP REQUIREMENTS

A. Food Service Establishment operators may be required to install grease traps in the waste line leading from drains, sink, and other fixtures or equipment where grease may be introduced into the sewer system in quantities that can cause blockage.

B. Prior to receiving a City of Garden Grove Plumber's Permit, an applicant shall submit to the FOG Control Program Manager a stamped and signed copy of installation plans indicating that the Orange County Health Care Agency has approved the grease trap location.

C. Sizing and installation of grease traps shall conform to the current edition of the California Plumbing Code.

D. Grease traps shall be maintained in efficient operating conditions by removing accumulated grease at a frequency approved by the FOG Control Program Manager.

E. Grease traps shall be maintained free of all food residues and any FOG waste removed during the cleaning and scraping process.

F. Grease traps shall be inspected periodically to check for leaking seams and pipes, and for effective operation of the baffles and flow-regulating device. Grease traps and their baffles shall be maintained free of all caked-on FOG and waste. Removable baffles shall be removed and cleaned during the maintenance process.

G. Dishwashers and food grinder units shall not be connected to or discharged into any grease trap.

Section 4.30.120. MONITORING FACILITIES REQUIREMENTS

A. The District may require the Food Service Establishments to construct and maintain in proper operating condition at the Food Service Establishment's sole expense, flow monitoring, constituent monitoring and/or sampling facilities.

B. The location of the monitoring or metering facilities shall be subject to approval by the FOG Control Program Manager.

C. Food Service Establishments may be required to provide immediate, clear, safe and uninterrupted access to the FOG Control Program Manager or inspectors to the Food Service Establishment's monitoring and metering facilities.

D. Food Service Establishments may also be required by the FOG Control Program Manager to submit waste analysis plans, contingency plans, and meet other necessary requirements to ensure proper operation and maintenance of the grease control device and compliance with this Ordinance.

E. No Food Service Establishment shall increase the use of water or in any other manner attempt to dilute a discharge as a partial or complete substitute for treatment to achieve compliance with this Ordinance and the FOG Wastewater Discharge Permit.

Section 4.30.130. INSPECTION AND SAMPLING CONDITIONS

A. The FOG Control Program Manager may inspect or order the inspection and sample the wastewater discharges of any Food Service Establishment to ascertain compliance with this Ordinance. The owner shall allow the District access to the Food Service Establishment premises, during normal business hours, for purposes of inspecting the Food Service Establishment's grease control devices or interceptor, reviewing the manifests, receipts and invoices relating to the cleaning, maintenance and inspection of the grease control devices.

1. Right to Inspect. Prior to commencing any inspection as authorized in this section, the authorized inspector shall obtain either the consent of the owner or occupant of the property or shall obtain an administrative inspection warrant or criminal search warrant.

2. Entry to Inspect. The authorized inspector may enter property to investigate the source of any discharge to any public street, inlet, gutter, storm drain or the stormwater drainage system located within the jurisdiction of the city.

3. Compliance Assessments. The authorized inspector may inspect property for the purpose of verifying compliance with this ordinance, including but not limited to (i) identifying products produced, processes conducted, chemicals used and materials stored on or contained within the property, (ii) identifying point(s) of discharge of all wastewater, process water systems and pollutants, (iii) investigating the natural slope at the location, including drainage patterns and man-made conveyance systems, (iv) establishing the location of all points of discharge from the property, whether by sanitary sewer collection system, surface runoff or through a storm drain system, (v) locating any illicit connection or the source of prohibited discharge, (vi) evaluating compliance with any permit issued pursuant to Article 3 hereof.

4. Records Review. The authorized inspector may inspect all records of the owner or occupant of property relating to FOG Best Management Practices to include related chemicals or processes presently or previously occurring on-site, facilities maps or schematics and diagrams, pumping and/or grease hauler manifests or receipts pollution prevention plans, monitoring program plans and any other record(s) relating to unauthorized connections, prohibited discharges, or any other source of contribution or potential contribution of pollutants to the stormwater drainage system.

5. Sample and Test. The authorized inspector may inspect, sample and test any area runoff, soils area (including groundwater testing), process discharge, materials within any waste storage area (including any container contents), and/or treatment system discharge for the purpose of determining the potential for contribution of pollutants to the stormwater drainage system. The authorized inspector may investigate the integrity of all storm drain and sanitary sewer systems, any legal nonconforming connection or other pipelines on the property using appropriate tests, including but not limited to smoke and dye tests or video surveys. The authorized inspector may take photographs or videotape, make measurements or

drawings, and create any other record reasonably necessary to document conditions on the property.

Section 4.30.140. NOTIFICATION OF SPILL

A. When material discharged to the sewer has the potential to cause or result in sewer blockages or SSOs, the discharger shall immediately notify the local Health Department, City or County, and the District.

B. Confirmation of this notification shall be made in writing to the FOG Control Program Manager no later than five (5) working days from the date of the incident. The written notification shall state the date of the incident, the reasons for the discharge or spill, what steps were taken to immediately correct the problem, and what steps are being taken to prevent the problem from recurring.

C. Such notification shall not relieve the discharger of any expense, loss, damage or other liability which may be incurred as a result of damage or loss to the District or any other damage or loss to person or property; nor shall such notification relieve the discharger of any fees or other liability which may be imposed by this Ordinance or other applicable law.

Section 4.30.150. ENFORCEMENT

A. Criminal Sanctions/General Penalty.

It is unlawful for any person, firm or corporation to violate any provision of this ordinance, including a failure of any party to comply with an order of the Program Manager. A violation of this ordinance shall constitute a misdemeanor; except that notwithstanding any other requirement of this ordinance, any violation constituting a misdemeanor herein, in the discretion of the District's legal counsel, or other authorized enforcement officer, may be charged and prosecuted as an infraction.

Any person, firm, corporation convicted of a misdemeanor shall be punished by a fine of note more than one thousand dollars ($1,000) or by imprisonment in the county jail for a period of not more than six (6) months, or by both such fine and imprisonment. Any person charged and convicted of an infraction under the provisions of this code is punishable pursuant to the fine schedule set forth in Government Code section 36900.

Each such person, firm, corporation shall be guilty of a separate offense for each and every day, during any portion of which, any violation of this code is committed, continued, or permitted by any such person, firm, corporation.

B. Nuisances/Civil Relief.

Any condition in violation of this Ordinance, including but not limited to the maintenance or use of any illicit connection or the occurrence of any prohibited discharge, shall constitute a threat to the public health, safety and welfare, and is declared and deemed a nuisance pursuant to Government Code section 38771.

Any continuing or repetitive violation of this ordinance is declared to be a public nuisance and the district's legal counsel or authorized legal representative is authorized to file an appropriate civil action, whether or not criminal proceedings have been commenced for the subject offense.

C. Costs of Abatement.

Pursuant to Health and Safety Code section 6523.3, the District is entitled to recover its costs incurred in taking any action to correct a violation of this ordinance. Such costs shall be added to any sewer service charge payable by any person violating this ordinance. The district shall have such remedies for the collection of such costs as it has for the collection of sewer service charges.

Section 4.30.160. DEFINITIONS

A. Unless otherwise defined herein, terms related to water quality shall be as adopted in the latest edition of Standard Methods for Examination of Water and Wastewater, published by the American Public Health Association, the American Water Works Association and the Water Environment Federation. The testing procedures for waste constituents and characteristics shall be as provided in 40 CFR 136 (Code of Federal Regulations).

B. Other terms not herein defined are defined as being the same as set forth in the latest adopted applicable editions of the California Codes applicable to building construction.

C. Subject to the foregoing provisions, the following definitions shall apply in this Ordinance:

Best Management Practices(Structural and Non-Structural)	Schedules of activities, prohibitions of practices, maintenance procedures, installation of equipment, and other management practices to control and limit the introduction of FOG to sewer facilities.,
Board	The Board of Directors of the District.

Change in Operations	Any change in the ownership, food types, or operational procedures that have the potential to increase the amount of FOG generated and/or discharged by Food Service Establishments in an amount that alone or collectively causes or creates a potential for SSOs to occur.
Composite Sample	A collection of individual samples obtained at selected intervals based on an increment of either flow or time. The resulting mixture (composite sample) forms a representative sample of the waste stream discharged during the sample period. Samples will be collected when a wastewater discharge occurs.
Discharger	Any person who discharges or causes a discharge of wastewater directly or indirectly to a public sewer and/or stormwater drain system. Discharger shall mean the same as User.
District	The Garden Grove Sanitary District.
Sewer Facility or System	Any property belonging to the District used in the treatment, reclamation, reuse, transportation, or disposal of wastewater.
Effluent	Any liquid outflow from the Food Service Establishment that is discharged.
Fats, Oils, and Grease ("FOG")	Any substance such as a vegetable or animal product that is used in, or is a by product of, the cooking or food preparation process, and that turns or may turn viscous or solidifies with a change in temperature or other conditions.
FOG Control Program	The FOG Control Program required by and developed pursuant to RWQCB Order No. R8-2002-0014, Section (c)(12)(viii).

FOG Control Program Manager	The individual designated by the District to administer the FOG Control Program. The FOG Control Program Manager is responsible for all determinations of compliance with the program.
Food Service Establishment	Facilities defined in California Uniform Retail Food Service Establishments Law (CURFFL) Section 113785, and any commercial entity within the boundaries of the District, operating in a permanently constructed structure such as a room, building, or place, or portion thereof, maintained, used, or operated for the purpose of storing, preparing, serving, or manufacturing, packaging, or otherwise handling food for sale to other entities, or for consumption by the public, its members or employees, and which has any process or device that uses or produces FOG, or grease vapors, steam, fumes, smoke or odors that are required to be removed by a Type I or Type II hood, as defined in CURFFL Section 113785. A limited food preparation establishment is not considered a Food Service Establishment when engaged only in reheating, hot holding or assembly of ready to eat food products and as a result, there is no wastewater discharge containing a significant amount of FOG. A limited food preparation establishment does not include any operation that changes the form, flavor, or consistency of food.
Food Grinder	Any device installed in the plumbing or sewage system for the purpose of grinding food waste or food preparation by-products for the purpose of discharging it into the sanitary sewer collection system.

Grease Control Device	Any grease interceptor, grease trap or other mechanism, device, or process, which attaches to, or is applied to, wastewater plumbing fixtures and lines, the purpose of which is to trap or collect or treat FOG prior to it being discharged into the sewer system. "Grease control device" may also include any other proven method to reduce FOG subject to the approval of the District.
Grease Interceptor	A multi-compartment device that is constructed in different sizes and is generally required to be located, according to the California Plumbing Code, underground between a Food Service Establishment and the connection to the sewer system. These devices primarily use gravity to separate FOG from the wastewater as it moves from one compartment to the next. These devices must be cleaned, maintained, and have the FOG removed and disposed of in a proper manner on regular intervals to be effective.
Grease Trap	A grease control device that is used to serve individual fixtures and have limited effect and should only be used in those cases where the use of a grease interceptor or other grease control device is determined to be impossible or impracticable.
General Manager	The individual duly designated by the Board of Directors of the District to administer this Ordinance.
Grab Sample	A sample taken from a waste stream on a one-time basis without regard to the flow in the waste stream and without consideration of time.
Hot Spots	Areas in sewer lines that have experienced sanitary sewer overflows resulting in the need for frequent maintenance and cleaning.

Inflow	Water entering a sewer system through a direct stormwater runoff connection to the sanitary sewer, which may cause an almost immediate increase in wastewater flows.
Infiltration	Water entering a sewer system, including sewer service connections, from the ground through such means as defective pipes, pipe joints, connections, or manhole walls.
Inspector	A person authorized by the District to inspect any existing or proposed wastewater generation, conveyance, processing, and disposal facilities.
Interceptor	A grease interceptor.
Interference	Any discharge which, alone or in conjunction with discharges from other sources, inhibits or disrupts the District's sewer system, treatment processes or operations; or is a cause of violation of the District's NPDES or Waste Discharge Requirements or prevents lawful sludge use or disposal.
Local Sewering Agency	Any public agency or private entity responsible for the collection and disposal of wastewater to the District's sewer facilities duly authorized under the laws of the State of California to construct and/or maintain public sewers.
NPDES	The National Pollutant Discharge Elimination System; the permit issued to control the discharge of liquids or other substances or solids to surface waters of the United States as detailed in Public Law 92-500, Section 402.
New Construction	Any structure planned or under construction for which a sewer connection permit has not been issued.
Person	Any individual, partnership, firm, association, corporation or public agency, including the State of California and the United States of America.

Prohibited Discharge	Any discharge which contains any pollutant, from public or private property to (i) the stormwater drainage system; (II) any upstream flow, which is tributary to the stormwater drain system; (III) any groundwater, river, stream, creek, wash or dry weather arroyo, wetlands area, march, coastal slough, or (iv) any coastal harbor, bay or the pacific Ocean.
Public Agency	The State of California and/or any city, county, special district, other local governmental authority or public body of or within this State.
Public Sewer	A sewer owned and operated by the District, or other local Public Agency, which is tributary to the District's sewer facilities.
Regulatory Agencies	Regulatory Agencies shall mean those agencies having regulatory jurisdiction over the operations of the District, including, but not limited to: a) United States Environmental Protection Agency, Region IX, San Francisco and Washington, DC (EPA). b) California State Water Resources Control Board (SWRCB). c) California Regional Water Quality Control Board, Santa Ana Region (RWQCB). d) South Coast Air Quality Management District (SCAQMD). e) California Department of Health Services (DOHS).

Remodeling	A physical change or operational change causing generation of the amount of FOG that exceed the current amount of FOG discharge to the sewer system by the Food Service Establishment in an amount that alone or collectively causes or create a potential for SSOs to occur; or exceeding a cost of $50,000 to a Food Service Establishment that requires a building permit, and involves any one or combination of the following: (1) Under slab plumbing in the food processing area, (2) a 30% increase in the net public seating area, (3) a 30% increase in the size of the kitchen area, or (4) any change in the size or type of food preparation equipment.
Sample Point	A location approved by the District, from which wastewater can be collected that is representative in content and consistency of the entire flow of wastewater being sampled.
Sampling Facilities	Structure(s) provided at the user's expense for the District or user to measure and record wastewater constituent mass, concentrations, collect a representative sample, or provide access to plug or terminate the discharge.
Sewer System Overflow (SSO)	A sanitary sewer system overflow (SSO), or sewage spill, is each instance of a discharge of sewage from a sanitary sewer system.
Sewage	Wastewater.
Sewer Facilities or System	Any and all facilities used for collecting, conveying, pumping, treating, and disposing of wastewater and sludge.
Sewer Lateral	A building sewer as defined in the latest edition of the California Plumbing Code. It is the wastewater connection between the building’s wastewater facilities and a public sewer system.

Sludge	Any solid, semi-solid or liquid decant, subnate or supernate from a manufacturing process, utility service, or pretreatment facility.
Stormwater Drainage System	Street gutter, channel, storm drain, constructed drain, lined diversion structure, wash area, inlet, outlet or other facility, which is part of or tributary to the county-wide stormwater runoff system and owned, operated, maintained or controlled by County of Orange, the Orange County Flood Control District or any city, and used for the purpose of collecting, storing, transporting or disposing of stormwater.
User	Any person who discharges or causes a discharge of wastewater directly or indirectly to a public sewer system. User shall mean the same as Discharger.
Waste	Sewage and any and all other waste substances, liquid, solid, gaseous or radioactive, associated with human habitation or of human or animal nature, including such wastes placed within containers of whatever nature prior to and for the purpose of disposal.
Manifest	That receipt which is retained by the generator of wastes for disposing recyclable wastes or liquid wastes as required by the District.
Waste Minimization Practices	Plans or programs intended to reduce or eliminate discharges to the sewer system or to conserve water, including, but not limited to, product substitutions, housekeeping practices, inventory control, employee education, and other steps as necessary to minimize wastewater produced.
Waste hauler	Any person carrying on or engaging in vehicular transport of waste as part of, or incidental to, any business for that purpose.
Wastewater	The liquid and water-carried wastes of the community and all constituents thereof, whether treated or untreated, discharged into or permitted to enter a public sewer.

Wastewater Constituents and Characteristics	The individual chemical, physical, bacteriological, and other parameters, including volume and flow rate and such other parameters that serve to define, classify or measure the quality and quantity of wastewater.

Section II. Effective Date

This Ordinance shall take effect immediately upon its adoption and a summary shall be published in a newspaper of general circulation as provided by law.

Adopted this 26th day of October 2004.

/s/ BRUCE A. BROADWATER
PRESIDENT

ATTEST:

/s/ RUTH E. SMITH
SECRETARY

STATE OF CALIFORNIA)
COUNTY OF ORANGE) ss:
CITY OF GARDEN GROVE)

I, RUTH E. SMITH, Secretary of the Garden Grove Sanitary District, hereby certify that the foregoing Ordinance was duly adopted by the Board of the Garden Grove Sanitary District at a meeting held on the 26th day of October 2004, by the following vote:

AYES: MEMBERS: (5) DALTON, LEYES, ROSEN, TRAN, BROADWATER
NOES: MEMBERS: (0) NONE
ABSENT: MEMBERS: (0) NONE

/s/ RUTH E. SMITH
SECRETARY

Appendix C-4

City of Anaheim Agreement

CITY OF ANAHEIM, CALIFORNIA
CIVIC CENTER, 200 South Anaheim Boulevard, Third Floor
Anaheim, California 92805

Office of
CITY ATTORNEY

Telephone:
714/999-5169

July 23, 1986

Garden Grove Sanitary District
Attention: President and
Board of Directors
11391 Acacia Parkway
P.O. Box 1437
Garden Grove, California 92642

Gentlemen:

Enclosed herewith is a completely executed copy of the Agreement between Garden Grove Sanitary District and the City of Anaheim.

The execution of said Agreement was approved by motion of the City Council of the City of Anaheim at their meeting held July 15, 1986.

Very truly yours,

Jack White

JACK L. WHITE
CITY ATTORNEY

Enclosure

cc: City Clerk
John Roche, Maintenace Dept.

1419V

RECEIVED JUL 2 5 1986

CITY OF ANAHEIM, CALIFORNIA 92803
OFFICE OF THE CITY CLERK

STATE OF CALIFORNIA)
COUNTY OF ORANGE) ss.
CITY OF ANAHEIM)

I, LEONORA N. SOHL, City Clerk of the City of Anaheim, do hereby certify that, upon a motion duly made and seconded, the attached Agreement for Joint Use and Maintenance of Sewerage Facilities was approved by the City Council of the City of Anaheim at a regular meeting of said City Council held on the 8th day of July, 1986.

IN WITNESS WHEREOF, I have hereunto set my hand and affixed the official seal of the City of Anaheim this 8th day of July, 1986.

Leonora N. Sohl
CITY CLERK OF THE CITY OF ANAHEIM

(SEAL)

AGREEMENT FOR JOINT USE AND MAINTENANCE OF SEWERAGE FACILITIES

THIS AGREEMENT FOR JOINT USE AND MAINTENANCE OF SEWERAGE FACILITIES, dated solely for identification this 8th day of July, 1986, is made and entered into by and between the

CITY OF ANAHEIM, a municipal corporation, hereinafter referred to as "CITY."

A
N
D

GARDEN GROVE SANITARY DISTRICT, a public body, corporate and politic, hereinafter referred to as "DISTRICT,"

W I T N E S S E T H:

WHEREAS, by Resolution No. 86-37, the Local Agency Formation Commission of Orange County (LAFCO) approved Reorganization No. 82 detaching approximately 1,163 acres of property within the City of Anaheim (CITY) from the Garden Grove Sanitary District (DISTRICT); and

WHEREAS, pursuant to the detachment, DISTRICT transferred to CITY all fixed assets and facilities of DISTRICT in the detaching area; and

WHEREAS, Resolution No. 86-37 calls for CITY to retain capacity rights in certain DISTRICT facilities to transport waste water from the detaching areas to the Orange County Sanitation District's facilities; and

WHEREAS, because capacity rights in certain DISTRICT facilities will be shared by DISTRICT and CITY, it is in the best interests of both parties to enter into an agreement to provide for the cost sharing of maintenance, repair and replacement of existing

OFFICE OF
CITY ATTORNEY
CITY OF ANAHEIM
200 S. ANAHEIM BOULEVARD, SUITE 356
ANAHEIM, CALIFORNIA 92805
(714) 999-5169

ORIGINAL

sewers in which DISTRICT and CITY will share capacity rights and to provide for expanded capacity where necessary in the future to transport the combined ultimate wastewater flows from portions of DISTRICT and CITY to the Orange County Sanitation District facilities.

NOW, THEREFORE, FOR AND IN CONSIDERATION OF THE MUTUAL PROMISES, COVENANTS AND CONDITIONS HEREIN CONTAINED, THE PARTIES HERETO AGREE AS FOLLOWS:

A. SHARED SEWER'S CAPACITY

1. DISTRICT hereby grants to CITY capacity rights in amounts as will be established below, the locations of which are shown in Exhibit "A" attached hereto and made a part hereof by this reference. DISTRICT and CITY agree to use said sewers only to transport wastewater from those portions of the detaching area of CITY within the tributary area shown as crosshatched or shaded in Exhibit "A."

2. When DISTRICT determines by field measurements that a portion of a shared sewer is flowing at capacity, as defined below, it shall immediately notify CITY in writing, setting forth the limits, the measured flow, and the depth of the peak flow. The shared sewers or portions thereof shall be deemed to be at capacity when the measured daily peak flow has a depth equal to seventy-five percent (75%) of the sewer diameter.

Upon determination and notification that a sewer is at capacity, both parties shall take actions necessary to cease issuance of any additional sewer connection permits to any tributary sewer or to appropriately condition issuance of the permits to mitigate additional outflow. The cessation of issuance

OFFICE OF [illegible] Y ATTORNEY
CITY OF ANAHEIM
200 S. ANAHEIM BOULEVARD, SUITE 356
ANAHEIM, CALIFORNIA 92805
(714) 999-5169

of sewer connection permits shall continue in force until additional sewer capacity has been constructed as provided for herein. Any conditionally issued permit shall provide that any outflow shall not increase the amount of total outflow in the particular shared sewer.

3. CITY's percentage of capacity in the shared sewers is based upon the current level of outflow of the detaching area and anticipated increased outflow based upon the current land use designations and densities of the detaching area. In the event CITY approves any development which will change the land use designation or permit a higher density which would create an increased outflow over that currently existing or anticipated, CITY agrees to impose a condition of approval on that development so as to mitigate the impact of the increased outflow on the shared sewer.

4. DISTRICT also recognizes that changes in land use and increased densities in its service area can impact the capacities of the shared sewers. Therefore, DISTRICT agrees that for any development in its service area which would increase densities or change land use so as to create an increased outflow into any shared sewer over that currently existing or is anticipated, it will impose a condition upon any connection permit to its system so as to mitigate the impact of increased outflow on a shared sewer.

B. MAINTENANCE, REPAIR AND REPLACEMENT OF SHARED SEWERS

1. Attached hereto and made a part hereof by the reference is Exhibit B which lists each shared sewer and the agreed percentage of current use by DISTRICT and CITY. As shown on Exhibit "B," DISTRICT and CITY share capacities in each shared

OFFICE OF CITY ATTORNEY
CITY OF ANAHEIM
200 S. ANAHEIM BOULEVARD, SUITE 356
ANAHEIM, CALIFORNIA 92805
(714) 999-5169

sewer in different ratios based upon the respective land areas and land uses currently existing in the areas served by each shared sewer. DISTRICT and CITY agree to share the cost of maintenance and upkeep of the shared sewers based upon the ratios of each shared sewer as shown on Exhibit "B." DISTRICT shall be responsible for the regular inspection, upkeep, maintenance and repair of the shared sewers and shall, on a regular interval acceptable to DISTRICT and CITY, invoice CITY for its percentage of that cost based upon the ratios set forth in Exhibit "B" and the schedule of costs set for in Exhibit "C" which is attached hereto and made a part hereof by this reference.

2. When DISTRICT determines that a portion of a shared sewer is in need of extraordinary repair, it shall immediately notify CITY in writing, setting forth a description and schedule of repair or replacement and the estimated cost thereof. Unless the work is required to abate an immediate public health problem DISTRICT and CITY shall work together to arrange for financing in the normal budgetary process. Work required to abate an immediate public health problem shall be commenced as reasonably practicable. DISTRICT agrees to consult with CITY, whenever practicable, before beginning emergency repairs. The cost of repair or replacement of each shared line shall be apportioned to each party as set forth in Exhibit "B." The total cost shall include engineering, administration and construction expenses. Prior to starting the repair or replacement work, DISTRICT shall bill CITY for its apportioned share. CITY shall promptly deposit the billed amount. Upon completion of the work and payment of all costs, DISTRICT shall submit a report setting forth all costs

OFFICE OF Y ATTORNEY
CITY OF ANAHEIM
200 S. ANAHEIM BOULEVARD, SUITE 356
ANAHEIM, CALIFORNIA 92805
(714) 999-5109

incurred together with either a bill, or a refund for the difference between the actual apportioned cost and the deposit.

3. If, within thirty (30) days after notification, CITY disagrees with the necessity or estimated cost or apportionment of the cost of the repair or replacement, it shall so notify the other party in writing. If the parties are unable to agree upon the need or cost of the repair or replacement, either party may initiate legal proceedings to determine each party's rights and obligations.

4. Nothing in this Agreement shall prohibit CITY from constructing alternative connections of the facilities in the detaching area to existing CITY-owned sewers, thereby eliminating the necessity for CITY's use of some or all of the shared sewers. If CITY chooses to make such connections, it shall give DISTRICT reasonable notice of its intentions, along with an anticipated date of completion. Upon cessation of the need of CITY for use of any shared sewer, the parties shall amend this Agreement to delete or modify the exhibit of shared sewers, or as otherwise appropriate. If CITY chooses to withdraw all or part of the detaching area from service or a shared sewer at or after receipt of a notice of need for extraordinary repairs as set forth above, it may do so in lieu of contributing to the cost of repairs not yet made, provided that the alternate connection is complete and the area served by the shared sewer no longer discharges outflow into the shared sewer on or before the time the extraordinary repairs are complete. If at all practicable, CITY shall coordinate its alternate sewer connection with DISTRICT's extraordinary repairs.

/

/

OFFICE OF THE CITY ATTORNEY
CITY OF ANAHEIM
200 S. ANAHEIM BOULEVARD, SUITE 356
ANAHEIM, CALIFORNIA 92805
(714) 999-5169

5. All repair and replacement work shall be done in accordance with applicable laws, ordinance and charter provisions related to public works projects.

C. GENERAL PROVISIONS

1. Each party hereto agrees to indemnify, defend and hold harmless the other contracting party, its officers, agents, employees and representatives from and against all claims, demands and actions in connection with the negligent or willful misconduct of the indemnifying party, its officers, agents, employees and representatives in the performance of this Agreement.

2. This writing constitutes the entire agreement between the parties with respect to the subject matter hereof, and supersedes all oral or written representations or written agreements which may have been entered into between the parties. No modification or revision shall be of any force or effect, unless the same is in writing and executed by the parties hereto.

If any provision of this Agreement shall be held invalid, such invalidity shall not affect the other provisions hereof, and to this extent, the provisions of this Agreement are intended to be and shall be deemed severable. The parties shall agree, if reasonably practicable, upon provisions which are equivalent from an economic point of view to replace any provision which is determined to be invalid.

3. Notices and communication concerning this Agreement shall be sent to the following addresses:

/

/

/

OFFICE OF THE CITY ATTORNEY
CITY OF ANAHEIM
200 S. ANAHEIM BOULEVARD, SUITE 356
ANAHEIM, CALIFORNIA 92805
(714) 999-5169

ANAHEIM	DISTRICT
City of Anaheim Attention: City Clerk 200 S. Anaheim Boulevard Anaheim, California 92805	Garden Grove Sanitary District Attention: President and Board of Directors 11391 Acacia Parkway P.O. Box 1437 Garden Grove, California 92642

The effective date of this Agreement shall be the later of the effective date of Reorganization No. 82 or the date of final execution of this Agreement.

IN WITNESS WHEREOF, the parties hereto have caused this Agreement to be executed on the dates hereinafter respectively set forth.

CITY OF ANAHEIM, a municipal corporation,

By _____
Mayor

DATE OF EXECUTION:
July 9 1986

ATTEST:
_____
City Clerk

"CITY"

GARDEN GROVE SANITARY DISTRICT, a public body, corporate and politic

By _____
President

DATE OF EXECUTION:

_____

By _____
Secretary

"DISTRICT"

APPROVED AS TO FORM:

OFFICE OF THE ANAHEIM CITY ATTORNEY

By _____

Date 10/23/86

JWF:lm/5323M

061986

OFFICE OF THE CITY ATTORNEY
CITY OF ANAHEIM
200 S. ANAHEIM BOULEVARD, SUITE 356
ANAHEIM, CALIFORNIA 92805
(714) 999-5169

EXHIBIT "B"

SHARED SEWERS	LENGTH
Chapman Avenue - 9th Street to Jetty Drive (9600'±)	9600'
Haster Street - Chapman Avenue to Simmons Avenue (1300'±)	1300'
West Street - Orangewood Avenue to 150' N/o Rickey Avenue (1000'±)	1000'
Jacalene Lane - Orangewood Avenue to 150' N/o Rickey Avenue (1000'±)	1000'
Chapman Avenue - Euclid Avenue to Waverly Drive (2150'±)	2150'
Loara Street - Chapman Avenue to 1300' N/o Chapman Avenue (1300'±)	1300'
Della Lane - Chapman Avenue to 200' S/o Ord Way (1300'±)	1300'
Chapman Avenue - Magnolia Avenue to Brookhurst Street (5200'±)	5200'
Brookhurst Street - Chapman Avenue to Katella Avenue (5200'±)	5200'
Katella Avenue - Magnolia Avenue to Endry Street (2000'±)	2600'
Decker Street - Endry Street to 150' E/o Jean Street (1200'±)	1200'
Crestwood Lane - Endry Street to 150' E/o Jean Street (1150'±)	1150'
Pacific Avenue - Magnolia Avenue to Brookhurst Street (5100'±)	5100'
Cerritos Avenue - Gilbert Avenue to Brookhurst Street (2600'±)	2600'
Gilbert Street - Cerritos Avenue to Mystic Lane (3300'±)	3300'
Endry Street - Katella Avenue to Crestwood Lane (1150'±)	1150'
Waverly Drive - Chapman Avenue to 150' S/o Lorane Way (2000'±)	2000'
Cerritos - Magnolia Avenue to 1150' Easterly (1150'±)	1150'
TOTAL LENGTH OF SHARED SEWERS	48,300'

EXHIBIT "B"

SHARED SEWERS - MAINTENANCE COST REIMBURSEMENT

Percentage of flow for shared sewers is based upon overall percentage of Anaheim's flow compared to the total of Anaheim's flow plus Garden Grove Sanitary District's flow.

Anaheim's percentage of flow is defined as the calculated flow derived from that area within the City of Anaheim formerly a part of the Garden Grove Sanitary District tributary to the shared sewer.

District's percentage of flow is defined as the calculated flow derived from the Garden Grove Sanitary District tributary to the shared sewer.

G.G.S.D. Flow	-	3,096,053	
Anaheim Flow	-	2,042,045	
TOTAL FLOW	-	5,138,098	GAL/DAY (GPD)

Anaheim Share

$$\frac{2,042,045}{5,138,098} = 39.75\%$$

Garden Grove Sanitary District Share

$$\frac{3,096,053}{5,138,098} = 60.25\%$$

EXHIBIT "B"

Flow Outside City of Anaheim
(Garden Grove Sanitary District Area)

ZONING	NO.ACRES	FLOW COEFFICIENTS GPD/ACRE	GPD
Low Density Residential	1,412.92	1550	2,190,026
Medium Density Residential	128.10	3880	497,028
Commercial	122.37	3230	395,255
Recreational/ Open Space	68.72	200	13,744
TOTALS	1,732.11		3,096,053

Flow Inside City of Anaheim
(Formerly part of Garden Grove Sanitary District)

ZONING	NO.ACRES	FLOW COEFFICIENTS GPD/ACRE	GPD
Low Density Residential	910.33	1550	1,411,011
Medium Density Residential	48.22	3880	187,094
Commercial	133.02	3230	429,654
Recreational/ Open Space	71.43	200	14,286
TOTALS	1,163.00		2,042,045

EXHIBIT "C"

MAINTENANCE COST

48,300 L.F. of Shared Sewers

Maintenance Cost @ $.06/lineal foot (1986)

(Maintenance cost to be adjusted annually per C.P.I. - All Urban Customers - Los Angeles - Long Beach - Anaheim average)

Total Maintenance Cost

(48,300) (.06) = $2,898 4,105.36

Anaheim Share

(.3975) ($2,898) = $1,152 1,631.04 = 1632

Garden Grove Sanitary District Share

(.6025) ($2,898) = $1,746 2,454

1986 = 111.9
1996 = 157.5
1997 = 159.5

Base = ~~.0536193~~ .054 .085/ft

CUUSA421SAØ

OFFICE OF CITY ATTORNEY
CITY OF ANAHEIM
200 S. ANAHEIM BOULEVARD, SUITE 356
ANAHEIM, CALIFORNIA 92805
(714) 999-5169

AGREEMENT FOR JOINT USE AND MAINTENANCE OF SEWERAGE FACILITIES

THIS AGREEMENT FOR JOINT USE AND MAINTENANCE OF SEWERAGE FACILITIES, dated solely for identification this 8th day of July, 1986, is made and entered into by and between the

CITY OF ANAHEIM, a municipal corporation, hereinafter referred to as "CITY."

A
N
D

GARDEN GROVE SANITARY DISTRICT, a public body, corporate and politic, hereinafter referred to as "DISTRICT,"

W I T N E S S E T H:

WHEREAS, by Resolution No. 86-37, the Local Agency Formation Commission of Orange County (LAFCO) approved Reorganization No. 82 detaching approximately 1,163 acres of property within the City of Anaheim (CITY) from the Garden Grove Sanitary District (DISTRICT); and

WHEREAS, pursuant to the detachment, DISTRICT transferred to CITY all fixed assets and facilities of DISTRICT in the detaching area; and

WHEREAS, Resolution No. 86-37 calls for CITY to retain capacity rights in certain DISTRICT facilities to transport waste water from the detaching areas to the Orange County Sanitation District's facilities; and

WHEREAS, because capacity rights in certain DISTRICT facilities will be shared by DISTRICT and CITY, it is in the best interests of both parties to enter into an agreement to provide for the cost sharing of maintenance, repair and replacement of existing

ORIGINAL

sewers in which DISTRICT and CITY will share capacity rights and to provide for expanded capacity where necessary in the future to transport the combined ultimate wastewater flows from portions of DISTRICT and CITY to the Orange County Sanitation District facilities.

NOW, THEREFORE, FOR AND IN CONSIDERATION OF THE MUTUAL PROMISES, COVENANTS AND CONDITIONS HEREIN CONTAINED, THE PARTIES HERETO AGREE AS FOLLOWS:

A. SHARED SEWER'S CAPACITY

1. DISTRICT hereby grants to CITY capacity rights in amounts as will be established below, the locations of which are shown in Exhibit "A" attached hereto and made a part hereof by this reference. DISTRICT and CITY agree to use said sewers only to transport wastewater from those portions of the detaching area of CITY within the tributary area shown as crosshatched or shaded in Exhibit "A."

2. When DISTRICT determines by field measurements that a portion of a shared sewer is flowing at capacity, as defined below, it shall immediately notify CITY in writing, setting forth the limits, the measured flow, and the depth of the peak flow. The shared sewers or portions thereof shall be deemed to be at capacity when the measured daily peak flow has a depth equal to seventy-five percent (75%) of the sewer diameter.

Upon determination and notification that a sewer is at capacity, both parties shall take actions necessary to cease issuance of any additional sewer connection permits to any tributary sewer or to appropriately condition issuance of the permits to mitigate additional outflow. The cessation of issuance

OFFICE OF THE CITY ATTORNEY
CITY OF ANAHEIM
200 S. ANAHEIM BOULEVARD, SUITE 356
ANAHEIM, CALIFORNIA 92805
(714) 999-5169

of sewer connection permits shall continue in force until additional sewer capacity has been constructed as provided for herein. Any conditionally issued permit shall provide that any outflow shall not increase the amount of total outflow in the particular shared sewer.

3. CITY's percentage of capacity in the shared sewers is based upon the current level of outflow of the detaching area and anticipated increased outflow based upon the current land use designations and densities of the detaching area. In the event CITY approves any development which will change the land use designation or permit a higher density which would create an increased outflow over that currently existing or anticipated, CITY agrees to impose a condition of approval on that development so as to mitigate the impact of the increased outflow on the shared sewer.

4. DISTRICT also recognizes that changes in land use and increased densities in its service area can impact the capacities of the shared sewers. Therefore, DISTRICT agrees that for any development in its service area which would increase densities or change land use so as to create an increased outflow into any shared sewer over that currently existing or is anticipated, it will impose a condition upon any connection permit to its system so as to mitigate the impact of increased outflow on a shared sewer.

B. MAINTENANCE, REPAIR AND REPLACEMENT OF SHARED SEWERS

1. Attached hereto and made a part hereof by the reference is Exhibit B which lists each shared sewer and the agreed percentage of current use by DISTRICT and CITY. As shown on Exhibit "B," DISTRICT and CITY share capacities in each shared

OFFICE OF T. ~ Y ATTORNEY
CITY OF ANAHEIM
200 S. ANAHEIM BOULEVARD, SUITE 356
ANAHEIM, CALIFORNIA 92805
(714) 999-5169

sewer in different ratios based upon the respective land areas and land uses currently existing in the areas served by each shared sewer. DISTRICT and CITY agree to share the cost of maintenance and upkeep of the shared sewers based upon the ratios of each shared sewer as shown on Exhibit "B." DISTRICT shall be responsible for the regular inspection, upkeep, maintenance and repair of the shared sewers and shall, on a regular interval acceptable to DISTRICT and CITY, invoice CITY for its percentage of that cost based upon the ratios set forth in Exhibit "B" and the schedule of costs set for in Exhibit "C" which is attached hereto and made a part hereof by this reference.

2. When DISTRICT determines that a portion of a shared sewer is in need of extraordinary repair, it shall immediately notify CITY in writing, setting forth a description and schedule of repair or replacement and the estimated cost thereof. Unless the work is required to abate an immediate public health problem DISTRICT and CITY shall work together to arrange for financing in the normal budgetary process. Work required to abate an immediate public health problem shall be commenced as reasonably practicable. DISTRICT agrees to consult with CITY, whenever practicable, before beginning emergency repairs. The cost of repair or replacement of each shared line shall be apportioned to each party as set forth in Exhibit "B." The total cost shall include engineering, administration and construction expenses. Prior to starting the repair or replacement work, DISTRICT shall bill CITY for its apportioned share. CITY shall promptly deposit the billed amount. Upon completion of the work and payment of all costs, DISTRICT shall submit a report setting forth all costs

OFFICE OF THE CITY ATTORNEY
CITY OF ANAHEIM
200 S. ANAHEIM BOULEVARD, SUITE 356
ANAHEIM, CALIFORNIA 92805
(714) 999-5169

incurred together with either a bill, or a refund for the difference between the actual apportioned cost and the deposit.

3. If, within thirty (30) days after notification, CITY disagrees with the necessity or estimated cost or apportionment of the cost of the repair or replacement, it shall so notify the other party in writing. If the parties are unable to agree upon the need or cost of the repair or replacement, either party may initiate legal proceedings to determine each party's rights and obligations.

4. Nothing in this Agreement shall prohibit CITY from constructing alternative connections of the facilities in the detaching area to existing CITY-owned sewers, thereby eliminating the necessity for CITY's use of some or all of the shared sewers. If CITY chooses to make such connections, it shall give DISTRICT reasonable notice of its intentions, along with an anticipated date of completion. Upon cessation of the need of CITY for use of any shared sewer, the parties shall amend this Agreement to delete or modify the exhibit of shared sewers, or as otherwise appropriate. If CITY chooses to withdraw all or part of the detaching area from service or a shared sewer at or after receipt of a notice of need for extraordinary repairs as set forth above, it may do so in lieu of contributing to the cost of repairs not yet made, provided that the alternate connection is complete and the area served by the shared sewer no longer discharges outflow into the shared sewer on or before the time the extraordinary repairs are complete. If at all practicable, CITY shall coordinate its alternate sewer connection with DISTRICT's extraordinary repairs.

/

/

OFFICE OF THE CITY ATTORNEY
CITY OF ANAHEIM
200 S. ANAHEIM BOULEVARD, SUITE 356
ANAHEIM, CALIFORNIA 92805
(714) 999-5169

5. All repair and replacement work shall be done in accordance with applicable laws, ordinance and charter provisions related to public works projects.

C. GENERAL PROVISIONS

1. Each party hereto agrees to indemnify, defend and hold harmless the other contracting party, its officers, agents, employees and representatives from and against all claims, demands and actions in connection with the negligent or willful misconduct of the indemnifying party, its officers, agents, employees and representatives in the performance of this Agreement.

2. This writing constitutes the entire agreement between the parties with respect to the subject matter hereof, and supersedes all oral or written representations or written agreements which may have been entered into between the parties. No modification or revision shall be of any force or effect, unless the same is in writing and executed by the parties hereto.

If any provision of this Agreement shall be held invalid, such invalidity shall not affect the other provisions hereof, and to this extent, the provisions of this Agreement are intended to be and shall be deemed severable. The parties shall agree, if reasonably practicable, upon provisions which are equivalent from an economic point of view to replace any provision which is determined to be invalid.

3. Notices and communication concerning this Agreement shall be sent to the following addresses:

/

/

/

OFFICE OF THE CITY ATTORNEY
CITY OF ANAHEIM
200 S. ANAHEIM BOULEVARD, SUITE 356
ANAHEIM, CALIFORNIA 92805
(714) 999-5169

ANAHEIM	DISTRICT
City of Anaheim Attention: City Clerk 200 S. Anaheim Boulevard Anaheim, California 92805	Garden Grove Sanitary District Attention: President and Board of Directors 11391 Acacia Parkway P.O. Box 1437 Garden Grove, California 92642

The effective date of this Agreement shall be the later of the effective date of Reorganization No. 82 or the date of final execution of this Agreement.

IN WITNESS WHEREOF, the parties hereto have caused this Agreement to be executed on the dates hereinafter respectively set forth.

CITY OF ANAHEIM, a municipal corporation,

By _____
Mayor

ATTEST:

_____
City Clerk

"CITY"

DATE OF EXECUTION:

July 9 1986

GARDEN GROVE SANITARY DISTRICT, a public body, corporate and politic

By _____
President

By _____
Secretary

"DISTRICT"

DATE OF EXECUTION:

_____

APPROVED AS TO FORM:

OFFICE OF THE ANAHEIM CITY ATTORNEY

By _____

Date 6/23/86

JWF:lm/5323M

061986

OFFICE OF THE CITY ATTORNEY
CITY OF ANAHEIM
200 S. ANAHEIM BOULEVARD, SUITE 356
ANAHEIM, CALIFORNIA 92805
(714) 999-5169

EXHIBIT "B"

SHARED SEWERS	LENGTH
Chapman Avenue - 9th Street to Jetty Drive (9600'±)	9600'
Haster Street - Chapman Avenue to Simmons Avenue (1300'±)	1300'
West Street - Orangewood Avenue to 150' N/o Rickey Avenue (1000'±)	1000'
Jacalene Lane - Orangewood Avenue to 150' N/o Rickey Avenue (1000'±)	1000'
Chapman Avenue - Euclid Avenue to Waverly Drive (2150'±)	2150'
Loara Street - Chapman Avenue to 1300' N/o Chapman Avenue (1300'±)	1300'
Della Lane - Chapman Avenue to 200' S/o Ord Way (1300'±)	1300'
Chapman Avenue - Magnolia Avenue to Brookhurst Street (5200'±)	5200'
Brookhurst Street - Chapman Avenue to Katella Avenue (5200'±)	5200'
Katella Avenue - Magnolia Avenue to Endry Street (2000'±)	2600'
Decker Street - Endry Street to 150' E/o Jean Street (1200'±)	1200'
Crestwood Lane - Endry Street to 150' E/o Jean Street (1150'±)	1150'
Pacific Avenue - Magnolia Avenue to Brookhurst Street (5100'±)	5100'
Cerritos Avenue - Gilbert Avenue to Brookhurst Street (2600'±)	2600'
Gilbert Street - Cerritos Avenue to Mystic Lane (3300'±)	3300'
Endry Street - Katella Avenue to Crestwood Lane (1150'±)	1150'
Waverly Drive - Chapman Avenue to 150' S/o Lorane Way (2000'±)	2000'
Cerritos - Magnolia Avenue to 1150' Easterly (1150'±)	1150'
TOTAL LENGTH OF SHARED SEWERS	48,300'

EXHIBIT "B"

SHARED SEWERS - MAINTENANCE COST REIMBURSEMENT

Percentage of flow for shared sewers is based upon overall percentage of Anaheim's flow compared to the total of Anaheim's flow plus Garden Grove Sanitary District's flow.

Anaheim's percentage of flow is defined as the calculated flow derived from that area within the City of Anaheim formerly a part of the Garden Grove Sanitary District tributary to the shared sewer.

District's percentage of flow is defined as the calculated flow derived from the Garden Grove Sanitary District tributary to the shared sewer.

G.G.S.D. Flow	-	3,096,053	
Anaheim Flow	-	2,042,045	
TOTAL FLOW	-	5,138,098	GAL/DAY (GPD)

Anaheim Share

$$\frac{2,042,045}{5,138,098} = 39.75\%$$

Garden Grove Sanitary District Share

$$\frac{3,096,053}{5,138,098} = 60.25\%$$

EXHIBIT "B"

Flow Outside City of Anaheim
(Garden Grove Sanitary District Area)

ZONING	NO.ACRES	FLOW COEFFICIENTS GPD/ACRE	GPD
Low Density Residential	1,412.92	1550	2,190,026
Medium Density Residential	128.10	3880	497,028
Commercial	122.37	3230	395,255
Recreational/ Open Space	68.72	200	13,744
TOTALS	1,732.11		3,096,053

Flow Inside City of Anaheim
(Formerly part of Garden Grove Sanitary District)

ZONING	NO.ACRES	FLOW COEFFICIENTS GPD/ACRE	GPD
Low Density Residential	910.33	1550	1,411,011
Medium Density Residential	48.22	3880	187,094
Commercial	133.02	3230	429,654
Recreational/ Open Space	71.43	200	14,286
TOTALS	1,163.00		2,042,045

EXHIBIT "C"

MAINTENANCE COST

48,300 L.F. of Shared Sewers

Maintenance Cost @ $.06/lineal foot (1986)

(Maintenance cost to be adjusted annually per C.P.I. - All Urban Customers - Los Angeles - Long Beach - Anaheim average)

Total Maintenance Cost

(48,300) (.06) = $2,898

Anaheim Share

(.3975) ($2,898) = $1,152

Garden Grove Sanitary District Share

(.6025) ($2,898) = $1,746

Appendix C-5

City of Orange Agreement

RECORDING REQUESTED BY
and mail to:
CITY OF ORANGE - Subdivision Section
300 East Chapman Avenue
Orange, California 92666

EXEMPT PER GOV'T
code 6103

AGREEMENT

THIS AGREEMENT, entered into this 15th day of July, 1985, by and between the CITY OF ORANGE, a municipal corporation, hereinafter referred to as "CITY", and the GARDEN GROVE SANITARY DISTRICT, a public corporation, hereinafter referred to as "DISTRICT".

WITNESSETH:

WHEREAS, the DISTRICT currently operates and maintains sewer lines within the corporate boundaries of the CITY, more particularly described as Area "A" and Area "B" as shown on the map of Exhibit "B", hereto attached and made a part of.

WHEREAS, said sewer lines shall be relinquished to the CITY by the DISTRICT as prescribed by the Orange County Board of Supervisors in Resolution No. 84-1806, marked Exhibit"A", hereto attached and made a part of.

WHEREAS, the subject area is now classified as a low density residential area.

WHEREAS, the Ultimate Land Use Plan of the Orange County Sanitation District designates the subject area as high density residential.

NOW, THEREFORE, IT IS AGREED by and between the CITY and DISTRICT as follows:

1. ONE YEAR AFTER THE FILING of the Notice of Completion of Orange County Reorganization No. 66 by the County, the DISTRICT shall relinquish subject sewer lines to the CITY. The DISTRICT shall remain responsible for the maintenence and operation of said lines until acceptance of the lines by the CITY.

AFTER ACCEPTANCE of subject sewer lines, the CITY shall become responsible for the maintenence and operation of said lines, and the CITY shall relieve

RECEIVED JUL 18 1985

the DISTRICT of all responsibility for future maintenence of the subject lines.

3. THE CITY HEREBY GRANTS TO THE DISTRICT, capacity rights of 140,000 gallons per day for the lines in Area "C" of Exhibit "B" for current capacities at peak flows.

4. THE CITY also hereby waives any cash payment for said capacity rights and future maintenence of said lines.

5. THE DISTRICT hereby grants to the CITY capacity rights of 280,000 gallons per day for the lines in Area "A" and Area "B" of Exhibit "B", in addition to the flow from Area "C" for current capacities at peak flows.

6. THE DISTRICT also hereby waives any cash payment for said capacity rights and future maintenence of said lines.

7. THE DISTRICT hereby agrees to construct an adequate sewer line at the southern-most intersecting point of Area "A" and Area "B" in order to connect Area"B" into the Orange County Sanitation District trunk sewer at the intersection of Chapman Avenue and Lewis Street. The cost of engineering, administration, and construction of said line shall be paid by the DISTRICT. After visual inspection of the existing lines by the CITY, the DISTRICT agrees to perform the necessary repairs, if any, to restore the lines to proper operation.

8. THE DISTRICT also hereby agrees to construct the abovementioned line and make the abovementioned repairs prior to acceptance of the lines by the CITY.

9. THE CITY agrees that upon completion of said line, the capacity rights of the CITY be reduced to 205,000 gallons per day, not including the flow from Area "C".

10. THE CITY further agrees to place a condition of approval upon any future development along the southern boundary of Area "A" to construct a new sewer along the frontage of the development which would reverse the flow back to the Orange County Sanitation District trunk sewer at Chapman Avenue and Lewis ST.

11. IT IS AGREED by and between the CITY and the DISTRICT that upon completion of each segment of sewer line and as the flow into the DISTRICT'S line dimenishes, that the capacity rights in said line be reduced accordingly by separate instrument.

12. IT IS FURTHER AGREED by and between the CITY and the DISTRICT that the capacity rights granted to the DISTRICT for Area "C" be reserved after Area "A" and Area "B" have been removed from the DISTRICT'S sewer system, until which time as Area "C" is removed from the system or the lines relinquished to the City of Anaheim.

IN WITNESS WHEREOF, THE CITY OF ORANGE has caused this agreement to be executed by the Mayor of the City Council on the day and year above first written and attested to by the Clerk of the City.

CITY OF ORANGE, a municipal corporation

By: _____
JAMES BEAM, mayor

STATE OF CALIFORNIA)
COUNTY OF ORANGE) ss

On this _____ day of _____, in the year 1985, before me, Marilyn Jensen, City Clerk of the City of Orange, personally appeared James Beam, personally known to me to be the person who executed this instrument as Mayor of the City of Orange, and acknowledged to me that the City of Orange executed the same.

Marilyn J Jensen
Marilyn Jensen, City Clerk of Orange

GARDEN GROVE SANITARY DISTRICT,
a public corporation

By: Robert H. Main
Robert H. Main, president

By: Sheldon S. Singer
Sheldon S. Singer, secretary

By: Ronald D. Cates
Ronald D. Cates, Witness

STATE OF CALIFORNIA)
COUNTY OF ORANGE) ss

STATE OF CALIFORNIA
COUNTY OF Orange ss.

On June 7, 1985, before me, the undersigned, a Notary Public in and for said State, personally appeared Ronald D. Cates, personally known to me (or proved to me on the basis of the oath of _____, a credible witness who is personally known to me) to be the person whose name is subscribed to the within instrument, as a witness thereto, who being by me duly sworn, deposed and said:

That he/~~she~~ resides in 1712 Birchfield Dr., Tustin, California, that he/~~she~~ was present and saw Robert H. Main, President and Sheldon S. Singer, Secretary, personally Garden Grove Sanitary District known to him/her to be the same person(s) described in and who executed the within instrument, as a party(ies) thereto, sign, seal and deliver the same and that said party(ies) duly acknowledged in the presence of said affiant, that he/she/they executed the same, and that said affiant, thereupon at the party's(ies') request, subscribed his/her name as a witness thereto.

OFFICIAL SEAL
LUPE CHANGALA-GARCIA
NOTARY PUBLIC-CALIFORNIA
ORANGE COUNTY
My Commission Expires Aug. 23, 1988

WITNESS my hand and official seal.

Signature Lupe Changala-Garcia (This area for official notarial seal)

3000 (6/82) — (Witness) American Title Company

Approved as to form:

Gene R. Minshew
(Assistant) City Attorney

GARDEN GROVE SANITARY DISTRICT,
a public corporation

By: _____
Robert H. Main, president

By: _____
Sheldon S. Singer, secretary

By: _____
Ronald D. Cates, Witness

STATE OF CALIFORNIA)
) ss
COUNTY OF ORANGE)

On this _____ day of _____, 1985, before me, _____, a notary public in and for said State, personally appeared _____ and _____, personally known to me (or proved to me on the basis of satisfactory evidence) to be the President and Secretary, respectively, of the Garden Grove Sanitary District, the public corporation that executed the within instrument on behalf of said corporation and acknowledged to me that such corporation executed the same.

My commission expires _____. Witness my hand and official seal.

_____
Notary Public in and for said State

Approved as to form:

_____
(Assistant) City Attorney

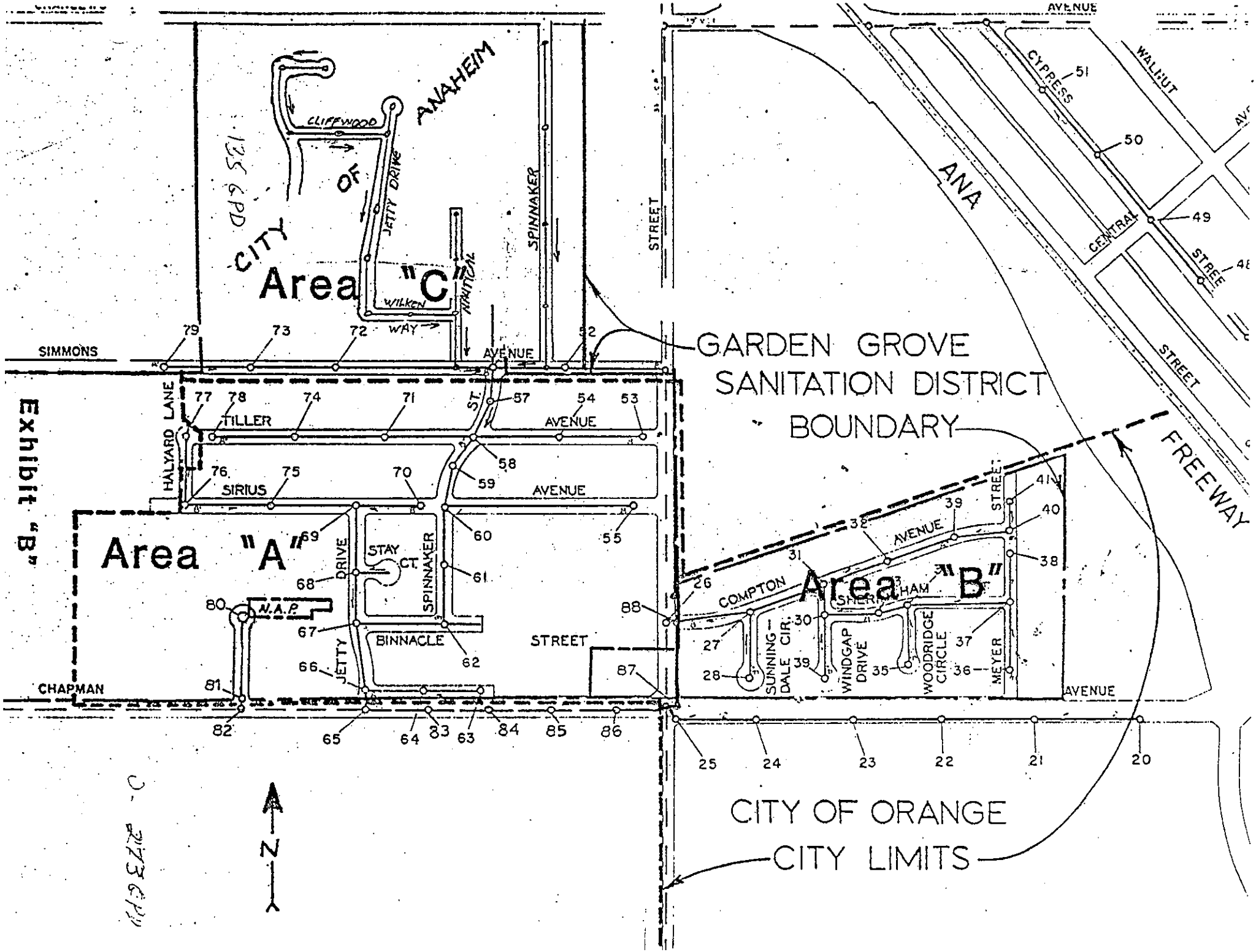
Exhibit "B"
Area "A"
Area "B"
Area "C"
CITY OF ANAHEIM
GARDEN GROVE SANITATION DISTRICT BOUNDARY
CITY OF ORANGE CITY LIMITS
FREEWAY
ANA
STREET
AVENUE
SIMMONS
CHAPMAN
TILLER
SIRIUS
HALYARD LANE
STAY CT.
DRIVE
SPINNAKER
BINNACLE
JETTY
JETTY DRIVE
CLIFFWOOD
WILKEN WAY
NAUTICAL
COMPTON
SUNNINGDALE CIR.
WINDGAP DRIVE
WOODRIDGE CIRCLE
MEYER
CYPRESS
WALNUT
CENTRAL
N.A.P.
N

RECORDING REQUESTED BY
and mail to:
CITY OF ORANGE - Subdivision Section
300 East Chapman Avenue
Orange, California 92666

EXEMPT PER GOV'T
code 6103

AGREEMENT

THIS AGREEMENT, entered into this 15th day of July, 1985, by and between the CITY OF ORANGE, a municipal corporation, hereinafter referred to as "CITY", and the GARDEN GROVE SANITARY DISTRICT, a public corporation, hereinafter referred to as "DISTRICT".

WITNESSETH:

WHEREAS, the DISTRICT currently operates and maintains sewer lines within the corporate boundaries of the CITY, more particularly described as Area "A" and Area "B" as shown on the map of Exhibit "B", hereto attached and made a part of.

WHEREAS, said sewer lines shall be relinquished to the CITY by the DISTRICT as prescribed by the Orange County Board of Supervisors in Resolution No. 84-1806, marked Exhibit"A", hereto attached and made a part of.

WHEREAS, the subject area is now classified as a low density residential area.

WHEREAS, the Ultimate Land Use Plan of the Orange County Sanitation District designates the subject area as high density residential.

NOW, THEREFORE, IT IS AGREED by and between the CITY and DISTRICT as follows:

1. ONE YEAR AFTER THE FILING of the Notice of Completion of Orange County Reorganization No. 66 by the County, the DISTRICT shall relinquish subject sewer lines to the CITY. The DISTRICT shall remain responsible for the maintenence and operation of said lines until acceptance of the lines by the CITY.

AFTER ACCEPTANCE of subject sewer lines, the CITY shall become responsible for the maintenence and operation of said lines, and the CITY shall relieve

RECEIVED JUL 18 1985

the DISTRICT of all responsibility for future maintenence of the subject lines.

3. THE CITY HEREBY GRANTS TO THE DISTRICT, capacity rights of 140,000 gallons per day for the lines in Area "C" of Exhibit "B" for current capacities at peak flows.

4. THE CITY also hereby waives any cash payment for said capacity rights and future maintenence of said lines.

5. THE DISTRICT hereby grants to the CITY capacity rights of 280,000 gallons per day for the lines in Area "A" and Area "B" of Exhibit "B", in addition to the flow from Area "C" for current capacities at peak flows.

6. THE DISTRICT also hereby waives any cash payment for said capacity rights and future maintenence of said lines.

7. THE DISTRICT hereby agrees to construct an adequate sewer line at the southern-most intersecting point of Area "A" and Area "B" in order to connect Area"B" into the Orange County Sanitation District trunk sewer at the intersection of Chapman Avenue and Lewis Street. The cost of engineering, administration, and construction of said line shall be paid by the DISTRICT. After visual inspection of the existing lines by the CITY, the DISTRICT agrees to perform the necessary repairs, if any, to restore the lines to proper operation.

8. THE DISTRICT also hereby agrees to construct the abovementioned line and make the abovementioned repairs prior to acceptance of the lines by the CITY.

9. THE CITY agrees that upon completion of said line, the capacity rights of the CITY be reduced to 205,000 gallons per day, not including the flow from Area "C".

10. THE CITY further agrees to place a condition of approval upon any future development along the southern boundary of Area "A" to construct a new sewer along the frontage of the development which would reverse the flow back to the Orange County Sanitation District trunk sewer at Chapman Avenue and Lewis ST.

11. IT IS AGREED by and between the CITY and the DISTRICT that upon completion of each segment of sewer line and as the flow into the DISTRICT'S line dimenishes, that the capacity rights in said line be reduced accordingly by separate instrument.

12. IT IS FURTHER AGREED by and between the CITY and the DISTRICT that the capacity rights granted to the DISTRICT for Area "C" be reserved after Area "A" and Area "B" have been removed from the DISTRICT'S sewer system, until which time as Area "C" is removed from the system or the lines relinquished to the City of Anaheim.

IN WITNESS WHEREOF, THE CITY OF ORANGE has caused this agreement to be executed by the Mayor of the City Council on the day and year above first written and attested to by the Clerk of the City.

CITY OF ORANGE, a municipal corporation

By: James Beam
JAMES BEAM, mayor

STATE OF CALIFORNIA)
COUNTY OF ORANGE) ss

On this _____ day of _____, in the year 1985, before me, Marilyn Jensen, City Clerk of the City of Orange, personally appeared James Beam, personally known to me to be the person who executed this instrument as Mayor of the City of Orange, and acknowledged to me that the City of Orange executed the same.

Marilyn J Jensen
Marilyn Jensen, City Clerk of Orange

GARDEN GROVE SANITARY DISTRICT,
a public corporation

By: Robert H. Main
Robert H. Main, president

By: Sheldon S. Singer
Sheldon S. Singer, secretary

By: Ronald D. Cates
Ronald D. Cates, Witness

STATE OF CALIFORNIA)
COUNTY OF ORANGE) ss

STATE OF CALIFORNIA)
COUNTY OF Orange) ss.

On June 7, 1985, before me, the undersigned, a Notary Public in and for said State, personally appeared Ronald D. Cates, personally known to me (or proved to me on the basis of the oath of _____, a credible witness who is personally known to me) to be the person whose name is subscribed to the within instrument, as a witness thereto, who being by me duly sworn, deposed and said: That he/~~she~~ resides in 1712 Birchfield Dr., Tustin, California, that he/~~she~~ was present and saw Robert H. Main, President and Sheldon S. Singer, Secretary, personally known to him/her to be the same person(s) described in and who executed the within instrument, as a party(ies) thereto, sign, seal and deliver the same and that said party(ies) duly acknowledged in the presence of said affiant, that he/she/they executed the same, and that said affiant, thereupon at the party's(ies') request, subscribed his/her name as a witness thereto.

OFFICIAL SEAL
LUPE CHANGALA-GARCIA
NOTARY PUBLIC-CALIFORNIA
ORANGE COUNTY
My Commission Expires Aug. 23, 1988

WITNESS my hand and official seal.

Signature Lupe Changala-Garcia

(This area for official notarial seal)

Notary Public in and for said State

Approved as to form:

Gene R. Menshew
(Assistant) City Attorney

American Title Company
3000 (6/82) — (W

'S INSTRUMENT IS A CORRECT COPY OF THE OR' ON
FILE IN THIS OFFICE.
ATTEST December 24 19 84
LINDA D. ROBERTS
Clerk of the Board of Supervisors
County of Orange
BY Shirley Gilbreath DEPUTY

RESOLUTION OF THE BOARD OF SUPERVISORS OF

ORANGE COUNTY, CALIFORNIA

December 18, 1984

On motion of Supervisor Riley, duly seconded and carried, the following Resolution was adopted:

WHEREAS, the Local Agency Formation Commission of Orange County has approved ORANGE COUNTY DISTRICT REORGANIZATION NO. 66 and has directed this Board to initiate proceedings in compliance with said Resolution; and

WHEREAS, said Reorganization involves the Garden Grove Sanitary District, which district is located within Orange County; and

WHEREAS, said Reorganization proposes the detachment of territory a legal description of which is attached hereto, from the Garden Grove Sanitary District; and

WHEREAS, said proposed Reorganization is subject to certain terms and conditions contained in the Local Agency Formation Commission's Resolution No. 84-85 as follows:

a. The fixed assets of the Garden Grove Sanitary District located within the city limits of Orange shall be transferred to the City of Orange.

b. The fixed assets of the Garden Grove Sanitary District located within the city limits of Santa Ana shall be transferred to the City of Santa Ana.

Resolution No. 84-1806
Proposed Hrg/O.C. Dist.
Reorg. No. 66

RECEIVED
DEC 26 1984
RICHARD T. TURNER, EXECUTIVE OFFICER
LOCAL AGENCY FORMATION COMM.

BPD:db

EXHIBIT "A"

c. Commencing with the first year that the reorganization is effective for property tax purposes as provided in Government Code Section 54902, all property tax revenues which would have been allocated to the Garden Grove Sanitary District from the area in the corporate limits of Orange, had it remained in the District, shall be allocated to the City of Orange.

d. Commencing with the first year that the reorganization is effective for property tax purposes as provided in Government Code Section 54902, all property tax revenues which would have been allocated to the Garden Grove Sanitary District from the area in the corporate limits of Santa Ana, had it remained in the District, shall be allocated to the City of Santa Ana.

e. Funds accumulated in reserve by the Garden Grove Sanitary District for the purpose of capital improvements or maintenance thereof shall be allocated to the City of Orange based on the proportion of property tax revenues generated within the City of Orange and allocated to the District as a percentage of the total property tax revenues of said District.

f. Funds accumulated in reserve by the Garden Grove Sanitary District for the purpose of capital improvements or maintenance thereof shall be allocated to the City of Santa Ana based on the proportion of property tax revenues generated within the City of Santa Ana and allocated to the District as a percentage of the total property tax revenues of said District.

g. That upon completion of said reorganization detaching territory within the cities of Orange and Santa Ana from the Garden Grove Sanitary District, said territories shall be relieved from the liability for payment of all or any part of principal or interest or any

other amounts which may be due or become due on account of all or any part of any bonded indebtedness, contracts, or obligations, including, but not by way of limitation, any judgment or judgments against the Garden Grove Sanitary District, and that said territory be relieved from the levying or fixing and the collection of any taxes or assessments as may be made for the payment thereof.

h. The City of Orange shall be granted certain capacity rights pertaining to the transfer of sewage from city facilities owned and operated by the Garden Grove Sanitary District for the purpose of disposal into Orange County Sanitation District facilities in the amount of 280,000 gallons per day.

i. The City of Santa Ana shall be granted capacity rights so long as capacity is available in the shared sewers described in the "Agreement For Joint Use of Sewerage Facilities" executed between the City of Santa Ana and the Garden Grove Sanitary District.

j. The Garden Grove Sanitary District shall be liable and pay the applicable State Board of Equalization filing and processing fee necessary to complete the proposed reorganization.

k. Any election called upon the question of confirming an order for the reorganization shall be called, held and conducted upon such reorganization only within the territory affected by such reorganization.

l. The effective date of the reorganization shall be one year from the date of recordation of the certificate of completion by the Executive Officer of the Local Agency Formation Commission.

and

WHEREAS, said proposal was initiated by resolution of the Orange County Board of Supervisors, at the request of the cities of Orange

and Santa Ana; and

WHEREAS, the reason for said proposed Reorganization as set forth in the resolution is as follows:

The City Councils of the cities of Orange and Santa Ana believe that multiple governmental agencies performing similar public works functions within the corporate boundaries of a city contribute to the complexity of local government and may hinder the ability of city residents to readily identify and contact the agency responsible for providing service. The City Councils further believe, as stated in their resolutions, that the residents of their respective cities would benefit from a full-service municipal concept and therefore have expressed their intention to become a full-service city and assume responsibility for providing the services currently provided by the Garden Grove Sanitary District; and

WHEREAS, it was determined the proposed detachment of territory from the Garden Grove Sanitary District was categorically exempt from the California Environmental Quality Act of 1970;

NOW, THEREFORE, BE IT RESOLVED that this Board does set the hour of 9:30 o'clock A.M. on the 16th day of January, 1985, a date not less than fifteen (15) days nor more than sixty (60) days after the date of this Resolution, in the Board Hearing Room of the Board of Supervisors of the County of Orange in the Hall of Administration, 10 Civic Center Plaza, Santa Ana, California, as the time, date and place for the proposed Reorganization designated as:

ORANGE COUNTY DISTRICT REORGANIZATION NO. 66

at which time, date and place this Board shall receive any oral or written protests, objections, or evidence which shall be filed or presented.

BE IT FURTHER RESOLVED that any interested person desiring to make written protest against said Reorganization shall do so by written communication filed with the Clerk of the Board not later than the hour set for hearing, and that a written protest by a landowner shall contain a description sufficient to identify the land owned by him, and a protest by a voter shall contain the residential address of such voter.

BE IT FURTHER RESOLVED that the Clerk is hereby ordered to publish a notice of said hearing once at least fifteen (15) days prior to January 16, 1985, the date set for hearing, in the Register, a newspaper of general circulation in the area.

BE IT FURTHER RESOLVED that the Clerk of this Board is hereby ordered to post a notice of said hearing on the official bulletin board adjacent to the Hearing Room of this Board, said posting to commence at least fifteen (15) days prior to the date set for hearing, and ton continue until said date.

BE IT FURTHER RESOLVED that the Clerk of this Board is hereby directed to give mailed notice of said hearing by mailing such notice to each affected county, city or district, the Garden Grove Sanitary District, and each person who has filed a request for special notice with the Clerk.

/

/

/

/

/

/

/

BPD:db

COUNTY COUNSEL
ORANGE COU
10 (5/77)

AYES: SUPERVISORS THOMAS F. RILEY, RALPH B. CLARK, ROGER R. STANTON, BRUCE NESTANDE and HARRIETT M. WIEDER

NOES: SUPERVISORS NONE

ABSENT: SUPERVISORS NONE

STATE OF CALIFORNIA)
) ss.
COUNTY OF ORANGE)

I, LINDA D. ROBERTS, Clerk of the Board of Supervisors of Orange County, California, hereby certify that the above and foregoing Resolution was duly and regularly adopted by the said Board at a regular meeting thereof held on the 18th day of December, 1984, and passed by a unanimous vote of said Board.

IN WITNESS WHEREOF, I have hereunto set my hand and seal this 18th day of December, 1984.

LINDA D. ROBERTS
Clerk of the Board of Supervisors
of Orange County, California

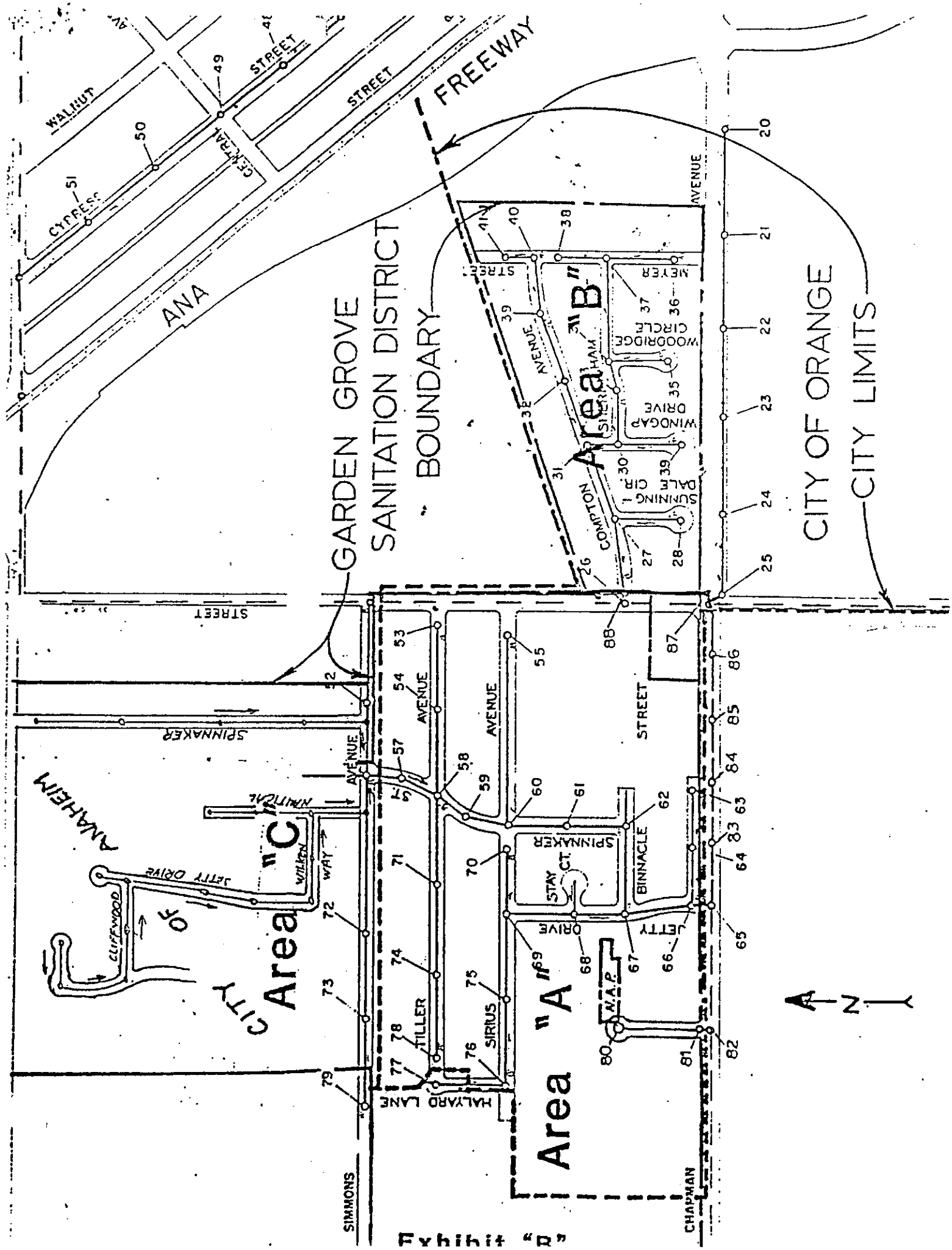

GARDEN GROVE SANITATION DISTRICT BOUNDARY
CITY OF ORANGE
CITY LIMITS
FREEWAY
ANA
WALNUT
STREET
CYPRESS
CENTRAL
STREET
AVENUE
MEYER
WOODRIDGE CIRCLE
WINDGAP DRIVE
SUNNING-DALE CIR.
COMPTON
STREET
AVENUE
STREET
SPINNAKER
AVENUE
AVENUE
STREET
SPINNAKER
STAY CT.
BINNACLE
JETTY DRIVE
N.A.P.
TILLER
SIRIUS
HALYARD LANE
SIMMONS
CHAPMAN
CITY OF ANAHEIM
JETTY DRIVE
WILKEN WAY
CLIFFWOOD
NAUTICAL
Area "A"
Area "B"
Area "C"
N

Exhibit "B"

Appendix C-6

City of Stanton Agreement

RESOLUTION NO. 3413

A RESOLUTION OF THE BOARD OF DIRECTORS OF THE GARDEN GROVE SANITARY DISTRICT APPROVING AGREEMENT WITH THE CITY OF STANTON FOR JOINT USE OF SEWERAGE FACILITIES.

Upon motion duly made, seconded and carried by the roll call vote shown below, the Board of Directors of the Garden Grove Sanitary District does hereby resolve as follows:

WHEREAS, the Garden Grove Sanitary District, hereinafter referred to as District, and the City of Stanton, hereinafter referred to as City, desire to enter agreement for joint use of sewer lines and appurtenances; and

WHEREAS, Orange County District Reorganization No. 88 detached approximately 2,240 acres from the District; and

WHEREAS, said Reorganization provides for District to retain capacity rights in certain District sewerage facilities to be transferred to City which will be needed by District to transport wastewater from remaining areas of District to the Orange County Sanitation District facilities; and

WHEREAS, sewers transferred to City will remain connected to sewers retained by District, and City will need capacity rights in these sewers to transport wastewater from the detached areas within City to downstream portions of the same sewer transferred to City; and

WHEREAS, because capacity rights in certain sewerage facilities will be shared by District and City, it is in the best interests of District and City to enter into agreement to provide for the cost sharing of maintenance of sewers in which District and City will share capacity rights and to provide for funding of the construction of future sewers within City or District that may be necessary to provide sufficient capacity to transport the combined ultimate wastewater flows from portion of District and City to the Orange County Sanitation District facilities.

NOW, THEREFORE, BE IT RESOLVED BY THE BOARD OF DIRECTORS OF THE GARDEN GROVE SANITARY DISTRICT, COUNTY OF ORANGE, STATE OF CALIFORNIA:

1. That District Board does approve contract with the City of Stanton. Said contract is marked Exhibit "A" and is attached hereto and by this reference made a part hereof.

2. The President and Secretary of the Board of Directors of the District be authorized and directed to execute said contract.

VOTE POLLED:

BOARD MEMBERS: Barker, Culver, Main, Singer, Zlaket

AYES Barker, Culver, Main, Singer

NOES None

ABSENT Zlaket

ADOPTED AND SIGNED this 16th day of January, 1991.

PRESIDENT - Robert H. Main

SECRETARY - Sheldon S. Singer

ATTEST:

I HEREBY CERTIFY that the above and foregoing Resolution was passed and adopted by the Sanitary Board of the Garden Grove Sanitary District of Orange County, California, on the 16th day of January, 1991.

Secretary of Garden Grove Sanitary District of Orange County, California

AGREEMENT

FOR

JOINT USE OF SEWERAGE FACILITIES

This agreement, made and entered into this_____day of _____, 19____, between the City of Stanton, a municipal corporation, hereinafter referred to as "CITY", and the Garden Grove Sanitary District of Orange County, California, a sanitary district organized under the Sanitary District Act of 1923, hereinafter referred to as "DISTRICT".

W I T N E S S E T H

WHEREAS, Orange County District Reorganization No. 88 detached approximately 2,240 acres from the DISTRICT and the Stanton County Water District located within CITY; and

WHEREAS, Reorganization No. 88 will transfer to CITY the fixed assets of the detached portion of DISTRICT that are within CITY; and

WHEREAS, said Reorganization provides for DISTRICT to retain capacity rights in certain DISTRICT sewerage facilities to be transferred to CITY which will be needed by DISTRICT to transport wastewater from remaining areas of DISTRICT to the Orange County Sanitation District facilities; and

WHEREAS, sewers transferred to CITY will remain connected to sewers retained by DISTRICT, and CITY will need capacity rights in these sewers to transport wastewater from the detached area within CITY to downstream portions of the same sewer transferred to CITY: and

WHEREAS, certain shared sewers within CITY or DISTRICT will not have adequate capacity for the wastewater from the planned ultimate development of the areas within DISTRICT and CITY tributary to said certain facilities; and

WHEREAS, because capacity rights in certain sewerage facilities will be shared by DISTRICT and CITY, it is in the best interests of district and CITY to enter into an agreement to provide for the cost sharing of maintenance of sewers in which DISTRICT and City will share capacity rights and to provide for funding of the construction of future sewers within CITY or DISTRICT that may be necessary to provide sufficient capacity to transport the combined ultimate wastewater flows from portions of DISTRICT and CITY to the Orange County Sanitation District facilities; and

NOW, THEREFORE, in consideration of the findings herein provided, the parties agree:

1. Shared Sewers

(a) CITY hereby grants to DISTRICT and DISTRICT hereby grants to CITY capacity rights so long as capacity is available in the shared sewers. DISTRICT and CITY agree to use said shared sewers only to transport wastewater from those portions of DISTRICT or CITY within the tributary areas. The shared sewers, or portions thereof, shall be deemed to be at capacity when the measured peak flow has a depth equal to 67% of the sewer diameter.

When either party determines by field measurements that a portion of a shared sewer is flowing at capacity, as defined herein, they shall immediately notify the other party in writing, setting forth the limits, the measured flow, and the depth of the peak flow.

Upon determination and notification that a sewer is at capacity, both parties shall immediately cease issuance of any additional sewer connection permits to any tributary sewer. The cessation of issuance of sewer connection permits shall continue in force until additional sewer capacity has been constructed as provided for herein.

(b) CITY and DISTRICT agree to maintain their respective portions of the shared sewers in the same manner and at the same frequency as all other sewers maintained by CITY or DISTRICT.

(c) Replacement or repair of shared sewers

Both parties agree that the shared sewers have a finite life and eventually, due to damage or deterioration, all or portions of the shared sewers may need to be replaced. When either party determines that a portion of shared sewer within its jurisdiction is in need of major replacement, it shall immediately notify the other party in writing, setting forth a description and schedule of repair or replacement and the estimated cost thereof. Unless the work is required to abate a public health problem it shall be scheduled so that both parties can arrange for financing in the next following fiscal year. Work required to abate a public health problem shall be commenced immediately.

The cost of repair or replacement of each shared line shall be apportioned to each party in accordance with the ultimate build out as permitted under the General Plan for acreage within the shared tributary area using established flow coefficients as determined by the County Sanitation Districts of Orange County as shown on Exhibit "A" attached hereto. The total cost shall include engineering, administration and construction expenses. Prior to starting the repair or replacement work, the initiating party shall bill the other party for their apportioned share. The other party shall promptly deposit the billed amount. Upon completion of the work and payment of all costs, the initiating party shall submit a report setting forth all costs incurred together with either a bill, or a refund for the difference between the actual apportioned cost and the deposit.

Any repair or replacement costing less that $5,000.00 may be done by force account. Repairs or replacements costing in excess of $5,000.00

shall be subject to a public bidding process.

If, within 30 days after notification, the notified party disagrees with the necessity or estimated cost of apportionment of the cost of the repair or replacement, they shall so notify the other party in writing. If the parties are unable to agree upon the need or cost of the repair or replacement, the matter may be submitted to arbitration as set forth in Section 4.

2. Future Sewers

It is anticipated that, as the tributary area to the shared sewers continues to develop, there will not be adequate capacity, as defined in Section 1, in some of the shared sewers. Parallel sewers and relief connections to Orange County Sanitation District facilities will be required in the future to provide capacity for ultimate planned development.

On or before October 1st of each year, each party shall determine whether the shared sewers within their jurisdiction have sufficient capacity, as defined in Section 1, to provide service without limiting connections for the next calendar year. If it appears that adequate capacity will not be available, then the parties shall meet and determine within 60 days the size and estimated cost of a parallel relief sewer that, together with the existing sewer will provide adequate capacity for ultimate planned development within the tributary area. Each party shall provide the estimated ultimate flows for their portion of the tributary area using ultimate land use plans and established flow coefficients as determined by the County Sanitation Districts of Orange County formulas.

The cost of the new parallel sewer, including engineering, administration and construction shall be apportioned between the parties equal to the ratio that each party's estimated ultimate peak flows bears to the combined ultimate peak flow.

The construction of the new line shall be scheduled to start after the next July 1st in order to permit both parties to budget the required funds.

Prior to commencing construction, the party within whose jurisdiction the new sewer will be located shall bill the other party for their apportioned share of the total cost. The other party shall promptly deposit the billed amount. Upon completion of the work, and payment of all costs, the initiating party shall submit a report setting forth all costs incurred together with either a bill or a refund for the difference between the actual apportioned cost and the deposit.

If one of the parties does not finance their apportioned share of the new parallel sewer, or relief connection, or for any other reason declines to participate, then the remaining party at their option may proceed to construct and finance a parallel sewer with capacity only for the tributary area within their jurisdiction. If this option is exercised, then the party choosing not to participate shall immediately cease issuance of sewer connection permits as provided for in Section 1(a). Such cessation of connection permits shall remain in effect until the non-participating party constructs sewer facilities with capacity for added flows from their tributary area or diverts the added flow to non-shared sewers.

3. Arbitration

If the parties are unable to agree on the necessity, cost, or apportionment of repair or replacement of shared sewers, the matter may be submitted to arbitration before a 3-man arbitration board in the following manner:

Either party may, within 60 days after the date of the notification of the need for a repair or replacement, appoint one member of said arbitration board. The third member shall be appointed by the first two members. All members of said board shall be registered Civil Engineers in the State of California.

4. Notice

Any notice hereunder shall conclusively be deemed to have been given upon the date it is enclosed in a sealed envelope addressed to the party to whom intended at the following address:

if to the CITY: City of Stanton

Attention_____

if to the DISTRICT: Garden Grove Sanitary District

Attention: President, Board of Directors

5. Termination

The term of this agreement shall commence upon approval and execution of this document by both parties, and shall continue for so long as is necessary to carry out the purposes of this agreement.

This agreement may be terminated or amended at any time by the consent of both parties.

EXHIBIT B

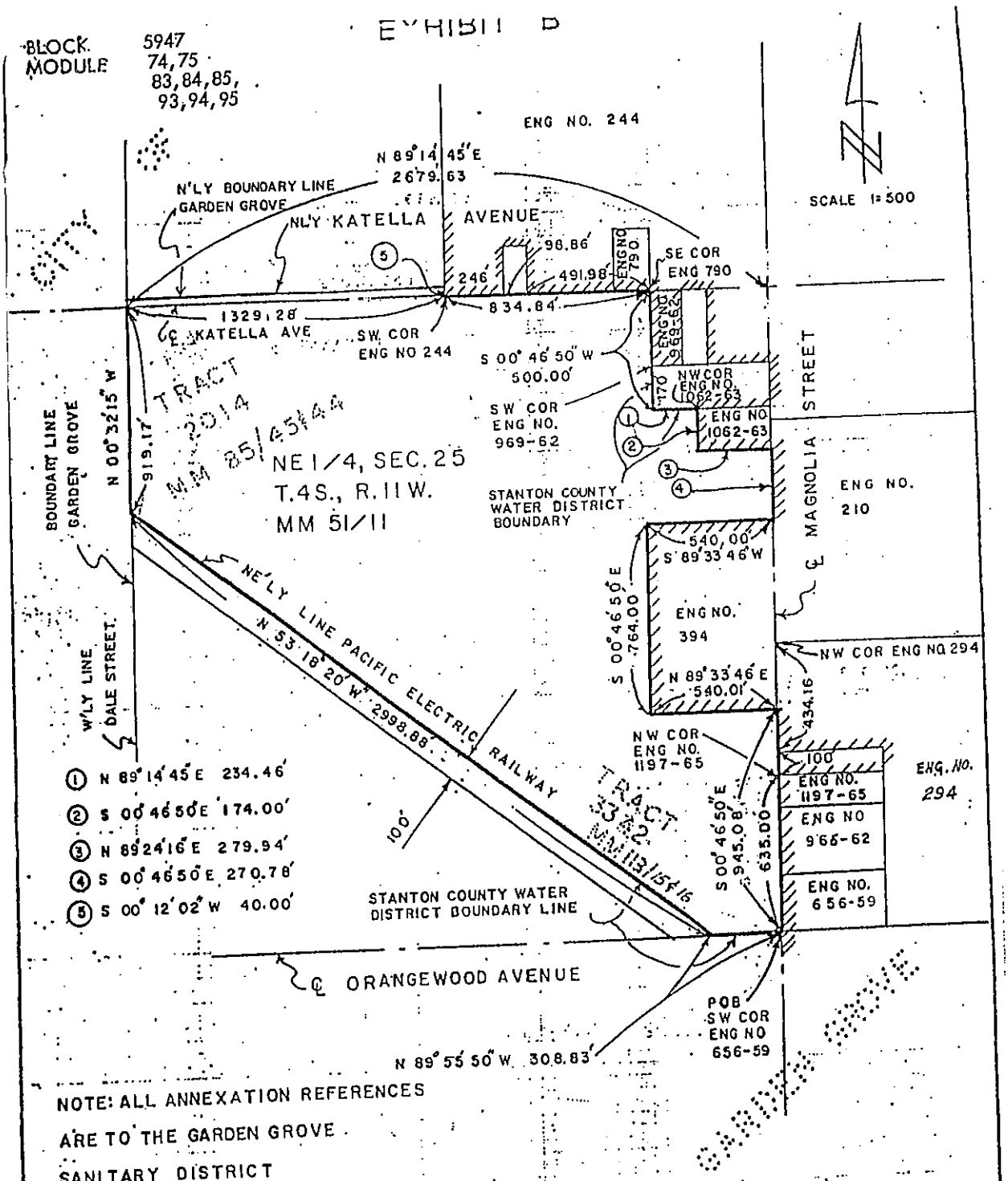

NOTE: ALL ANNEXATION REFERENCES ARE TO THE GARDEN GROVE SANITARY DISTRICT

REGISTERED PROFESSIONAL ENGINEER
JOHN THOMAS BAINE
EXPIRES 6-30-89
No. 15795
CIVIL
STATE OF CALIFORNIA

ENGINEERS SEAL

J. Thomas Baine
JOHN THOMAS BAINE
R.C.E. 15795

This proposal does meet the approval of the Orange County Surveyor's Office
C.R. Nelson, County Serveyor

By [signature]
Deputy County Serveyor

Date AUGUST 13, 1987

LEGEND

ISTING BOUNDARY
NEXATION BOUNDARY

PREPARED BY:
BERRYMAN & STEPHENSON INC.
CONSULTANTS TO GOVERNMENT AGENCIES
1415 EAST SEVENTEENTH STREET
SANTA ANA, CALIFORNIA 92701

REORGANIZATION NO 101
GARDEN GROVE SANITARY DISTRICT
(Detachment of territory from Stanton County Water District and Annexation of same to the Garden Grove Sanitary District)

Appendix C-7

City of Midway Agreement

AGREEMENT

THE PARTIES MUTUALLY AGREE AS FOLLOWS:

1. DURATION: This Agreement shall be effective when executed by both parties, and the obligations of the parties hereunder shall commence upon the effective date of the reorganization, which is the date of recordation of the Certificate of Completion pursuant to Term 19 of the LAFCO Terms and Conditions. This Agreement shall continue as long as the parties continue to share sewer facilities or until superseded by mutual written agreement of the parties.

2. SHARED SANITARY SEWERS

a. CAPACITY RIGHTS GGSD hereby grants to MCSD, and MCSD grants to GGSD capacity rights so long as capacity is available in the shared sanitary sewers, the locations of which are shown in attached Exhibit A, and which are described in attached Exhibit B. MCSD and GGSD agree to use said shared sanitary sewers to transport wastewater only from those areas specified on Exhibit "A" as tributary to the designated facilities. The diversion, release, or transmission of wastewater from any other area into the shared sanitary sewer facilities by either party, without express written consent of the other party, shall be deemed to be a breach of this Agreement, and the party causing the unauthorized diversion, release, or transmission shall be subject to all remedies as provided in Section 8 hereof. The shared sanitary sewers or portions thereof shall be deemed to be at capacity for the purposes of this Agreement when the measured peak flow has a depth equal to 75% of the sanitary sewer diameter.

When either party determines by field measurements that a portion of the shared sanitary sewer is flowing at capacity, as defined herein, such party shall immediately notify the other party in writing, setting forth the capacity limits, the measured flow, and the depth of peak flow for the sanitary sewer in question.

b. MAINTENANCE GGSD and MCSD agree to maintain the portions of the shared sanitary sewers as shown on Exhibit A which lie in their jurisdiction in good condition and in at least the same manner and at the same frequency as all other comparable sanitary sewers maintained by GGSD and MCSD. Costs for routine maintenance shall be apportioned as set forth in Exhibit B. For purposes of this agreement, routine maintenance shall include anything that is within the normal scope of duties of the responsible party's employees or contractors. Any repair in excess of the normal scope of such duties shall be undertaken pursuant to paragraph 2.c.

c. REPLACEMENT OR REPAIR OF SHARED SANITARY SEWERS Both parties acknowledge and agree that the shared sanitary sewers have a finite life, and that eventually, due to damage or deterioration, all or portions of the shared sanitary sewers may need to be replaced. When either party determines that a portion of a shared sanitary sewer within its jurisdiction is in need of major repair or replacement, it shall immediately notify the other party in writing, setting forth a description and proposed schedule of repair or replacement, and the estimated cost thereof. Unless the work is required to abate a public heath hazard, it shall be scheduled so that both parities can arrange for financing. Work required to abate a public health hazard shall be commenced immediately. In the event that the non-initiating party disagrees with the necessity, projected cost, or cost apportionment of a repair or replacement, the parties agree to meet and confer to resolve the disagreement prior to scheduling construction.

The cost of repair or replacement of each shared line, and the cost of cleanup of any sewage spill on a shared line, shall be apportioned to each party as set forth in Exhibit B. The total cost shall include engineering, administration and construction expenses. Prior to starting the repair and replacement work, the initiating party shall bill the other party for such party's apportioned share. In the case of a normal repair or replacement, this bill shall be sent between sixty (60) and ninety (90) days prior to the scheduled commencement of the construction on the project. In the case of a repair to abate a public health hazard, the bill shall be sent after the repair is completed. The other party shall promptly deposit the billed amount with the initiating party. The initiating party must keep these funds in a segregated fund, and use them only for the project for which they were deposited. Upon completion of the work and payment of all costs, the initiating party shall submit a report setting forth all costs incurred together with either a bill, or a refund, for the difference between the actual apportioned cost and the deposit.

Any repair or replacement costing less that $5,000 (five thousand dollars) may be done by force account. All other repairs or replacements shall be subject to a public bidding process.

If the party receiving notice of a necessary repair as provided in this section fails to deposit the specified amount with the party giving notice within sixty (60) days after the mailing of said notice, the party giving notice may proceed with the work and recover from the delinquent party that party's proportionate share of all necessary and appropriate costs as determined after completion of repairs, plus actual damages including interest at the rate available on funds deposited in the Local Agency Investment Fund of the State of California ("LAIF" rate") all reasonable attorneys' fees, court costs, and other reasonable costs incurred in collecting said amount from the delinquent party.

3. FUTURE SANITARY SEWERS It is anticipated that future development in the tributary area may lead to a situation in which there is not adequate capacity, as defined in Section 1, in the shared sanitary sewers.

On or before October 1 of each year, each party shall determine whether the shared sanitary sewers within its jurisdiction have sufficient capacity, as defined in Section 1, to provide service without limiting connections for the next calendar year. If it appears that adequate capacity will not be available then the parties shall meet and determine within 60 days the size and estimated cost of a parallel relief sanitary sewer that, together with the existing sanitary sewer, will provide adequate capacity for ultimate planned development within the tributary area. Each party shall provide the estimated flows for their portions of tributary area.

The cost of the new parallel sanitary sewer, including engineering, administration and construction shall be apportioned between the parties equal to the ratio that each party's estimated ultimate peak flows bear to the combined ultimate peak flow.

The construction of the new line shall be scheduled by the mutual agreement of the parties, taking into account budgetary considerations, but in no event shall it be undertaken sooner than the next July 1.

Prior to commencing construction, the party within whose jurisdiction the new sanitary sewer will be located shall bill the other party for its apportioned share of the total cost. The other party shall promptly deposit the billed amount with the initiating party. The initiating party must keep these funds in a segregated fund, and use them only for the project for which they were deposited. Upon completion of the work and the payment of all costs, the initiating party shall submit a report setting forth all costs incurred together with either a bill, or a refund, for the difference between the actual apportioned cost and the deposit.

If one of the parties does not fund its apportioned share of the new parallel sanitary sewer, or relief connection, or for any other reason declines to participate, then the remaining party may, at its option, proceed to construct and finance a parallel sanitary sewer with capacity only for the tributary area within its jurisdiction. If this option is exercised, then the party choosing not to participate shall immediately cease issuance of sanitary sewer connection permits as provided for in Section 1(a). Such cessation of connection permits shall remain in effect until the non-participating party constructs sanitary sewer facilities with capacity for added flows from its tributary area, or diverts the added flow to non-shared sanitary sewers.

4. BROOKHURST STREET LINE

a. Line Improvements. Notwithstanding any other provision of this Agreement, GGSD shall, at its sole cost and expense, plan, design, and construct improvements to the existing ten-inch (10") sanitary sewer line in Brookhurst Street between Hazard Avenue and Bolsa Avenue, which are adequate to meet all foreseeable future needs of the area tributary to said sanitary sewer line shown on Exhibit "A". The timing of the improvements and the nature of the improvements shall be determined in GGSD's sole discretion, provided that the improvements shall be completed and in use no later than five (5) years from the effective date of reorganization as provided by Term No. 4 of the LAFCO Terms and Conditions. GGSD will deposit those reserve funds transferred from MCSD to GGSD, pursuant to Term No. 20 of the LAFCO Terms and Conditions, into an escrow account to be used to fund all or a portion of these improvements. Upon completion of the improvements, the improved facilities shall be owned and controlled by GGSD, subject to the shared capacity provided herein. The subject sanitary sewer line is shown on Exhibit "C" attached hereto.

b. Line Maintenance Prior to completion of the improvements described in Section 4 a., GGSD shall bear all costs and expenses for maintenance and repair of, and for cleanup of sewage spills occurring on, the 10" sanitary sewer line in Brookhurst Street and related facilities. In addition, so long as GGSD is diverting wastewater from its Hazard Street sanitary sewer line into MCSD's facilities in Bowling Green Street and Fowler Circle, GGSD shall bear all maintenance and repair costs for, and the cost of cleanup of sewage spills occurring on, those sewer lines and related facilities. Upon completion of the improvements described in Section 4 a., GGSD shall discontinue all wastewater diversions into the Bowling Green/Fowler Circle facilities and disconnect its facilities therefrom.

c. Permits MCSD agrees to cooperate with GGSD in securing any necessary permits, entitlements, or other authorizations that may be required by the City of Westminster for construction of the improvements provided for in this Section.

5. WESTMINSTER/NEWLAND AREA SHARED SANITARY SEWERS

a. LINE CAPACITY At such time as MCSD has measurements showing that the measured peak daily flow in the shared sanitary sewers serving the Westminster Avenue/Newland Street area has a depth equal to 75% of the sanitary sewer diameter, MCSD, subject to approval of GGSD with regards to consultant selection and project scope, shall undertake an engineering study to examine the causes and possible remedies for the capacity problems of these shared sanitary sewers. GGSD shall reimburse MCSD for a share of the cost

which is proportional to GGSD's actual contribution to the flow in the sanitary sewers studied. After completion of the study, the parties shall meet and confer to agree on an approach to be used to resolve the capacity problems prior to scheduling construction of the project.

b. FUNDING GGSD and MCSD mutually agree to set aside funds in restricted accounts for their respective portions of any project agreed upon as a result of a study conducted pursuant to Section 5(a) within two years of the agreement between the parties on such a project.

c. CONSTRUCTION The cost of repair or replacement of each shared line shall be apportioned on the basis of the flow attributable to the tributary sanitary sewers within the jurisdiction of each agency. The total cost shall include engineering, administration and construction expenses. Upon completion of the work and payment of all costs, the initiating party shall submit a report setting forth all costs incurred together with a bill for the actual apportioned cost.

GGSD shall reimburse MCSD for GGSD's share of all costs and expenses incurred in connection with the repair or replacement of the shared lines no later than thirty (30) days after receipt of the report and bill. If GGSD fails to reimburse MCSD within thirty (30) days, then MCSD shall be entitled to recover from GGSD, in addition to GGSD's share of costs, actual damages including interest at the LAIF rate, plus all attorneys' fees, court costs, and other expenses incurred in collecting said amount.

d. MAINTENANCE, REPLACEMENT AND REPAIR The shared sanitary sewers serving the Westminster/Newland area shall be subject to the maintenance, replacement and repair terms stated in Section 2 of this agreement.

6. KNOTT STREET/GARDEN GROVE BOULEVARD AREA MCSD and GGSD mutually agree that MCSD shall provide sanitary sewer services to those areas of GGSD lying North of Garden Grove Boulevard, South of State Highway 22, and West of Knott Street. GGSD agrees to pay to MCSD an amount equal to the then current MCSD annual sanitary sewer assessment for each parcel served under this section. The sanitary sewers in this area shall be subject to the same cost-sharing provisions regarding maintenance, repair and replacement as the shared sanitary sewers discussed in Section 2.

7. NOTICES Any notices hereunder shall conclusively be deemed to have been given upon the date it is enclosed in a sealed envelope addressed to the party to whom it is intended, and deposited in the United States Mail with adequate postage, delivered to the office of intended party, or sent through other commercially reasonable means, such as overnight delivery by a reputable

courier company.

The addresses of the respective parties for all notices shall be:

For GGSD:

City Engineer
City of Garden Grove
11222 Acacia Parkway
Garden Grove, CA 92840

For MCSD:

General Manager
Midway City Sanitary District
14451 Cedarwood Avenue
Westminster, CA 92683

8. REMEDIES In addition to any other remedies provided elsewhere in this Agreement and by law, the parties shall be entitled to specific performance. The parties acknowledge that monetary damages are not an adequate remedy in the event of a breach by either party to this Agreement with respect to the obligations to construct or repair facilities and to discontinue wastewater flows. The parties agree that said construction, repair or discontinuance obligations shall be specially enforceable by any court of competent jurisdiction.

9. AMENDMENT. This Agreement may be amended from time-to-time by the written agreement of both parties.

10. LAFCO TERMS AND CONDITIONS. This Agreement is intended to, and shall be construed to be consistent with and implement the Terms and Conditions imposed by LAFCO on Garden Grove Reorganization No. 141, a copy of which is attached hereto as Exhibit "E" and incorporated by reference. The terms of this Agreement shall be subject to the LAFCO Terms and Conditions as they exist on the date hereof and to any future amendments and modifications thereto. This agreement constitutes the entire agreement between the parties relative to joint use sanitary sewers and shall supersede all prior agreements.

11. ATTORNEY'S FEES. In the event that litigation becomes necessary for the resolution of any dispute arising under the terms of this agreement, the prevailing party shall be entitled to its reasonable attorney's fees from the other party.

IN WITNESS THEREOF, the parties have executed this Agreement on the day and year first referenced herein.

GARDEN GROVE SANITARY DISTRICT

ATTEST:

City Clerk

By:

President

APPROVED AS TO FORM:

Special Counsel

MIDWAY CITY SANITARY DISTRICT

ATTEST:

Secretary

President

APPROVED AS TO FORM:

Special Counsel

EXHIBIT A

TRIBUTARY AREAS INTO
SHARED SANITARY SEWER FACILITIES

AREA 4E PAGE 1 OF 3

EXHIBIT A

TRIBUTARY AREAS INTO
SHARED SANITARY SEWER FACILITIES

AREA 4F PAGE 2 OF 3

EXHIBIT A

TRIBUTARY AREAS INTO
SHARED SANITARY SEWER FACILITIES

AREAS 5A AND 5C PAGE 3 OF 3

LOCATION	MAINTENANCE SHARE MCSD	GGSD	LENGTH, FT
1) SEWERLINE TO HOOVER TRUNK SEWER (SEE EXHIBIT A, PARCEL 4E)			
WESTMINSTER AV./ NEWLAND - BEACH BL. (JACKSON TO 15TH)	45%	55%	2,600
15TH ST/ E/O BEACH- PACIFIC AND S/O PACIFIC	70	30	1,300
14TH ST./ PACIFIC - HOOVER	80	20	2,000
2) SEWERLINE TO BROOKHURST ST. TRUNK SEWER (SEE EX. A. PARCEL 4F)			
YAWL/ HENDERSON - MELRIC	20%	80%	600
MELRIC/ YAWL - WARD	15	85	650
WARD/ MELRIC - DAVIT (CUNNINGHAM)	10	90	600
WARD/ DAVIT - TAMPION (NOTTINGHAM)	80	20	500
McFADDEN/ WARD - YORKSHIRE	60	40	800
McFADDEN/ YORKSHIRE - BROOKHURST	75	25	1,800
3) SEWERLINE TO BOLSA AV. TRUNK SEWER (SEE EX. A, PARCEL 5C)			
BROOKHURST/ NEWCASTLE - PREMIER	5%	95%	800
BROOKHURST/ PREMIER - BOLSA	30	70	500

EXHIBIT B - CONTINUED

LOCATION	MAINTENANCE SHARE MCSD	GGSD	LENGTH. FT
4) SEWERLINE TO BOLSA AV. TRUNK SEWER (SEE EX. A, PARCEL 5C)			
SHEFFIELD/ HAZARD - ASHFORD	20	80	400
ASHFORD/ WAKEFIELD - SHEFFIELD	45	55	700
WAKEFIELD/ ASHFORD - SABRE	80	20	400
SABRE/ DONEGAL - WAKEFIELD	45	55	600
DONEGAL/ SABRE - MADISON	60	40	500
DONEGAL/ MADISON - LEXINGTON	45	55	500
LEXINGTON (GGSD LIMITS)	50	50	600
ALLEY/ SO. OF LEXINGTON - BOLSA TRUNK SEWER	60	40	600
5) SEWERLINE TO MAGNOLIA ST. TRUNK SEWER (SEE EX. A, PARCEL 5A)			
BUSHARD/ N/O SUTHERLAND - OASIS	40%	60%	900
OASIS / MAGNOLIA - BUSHARD	85	15	2,700

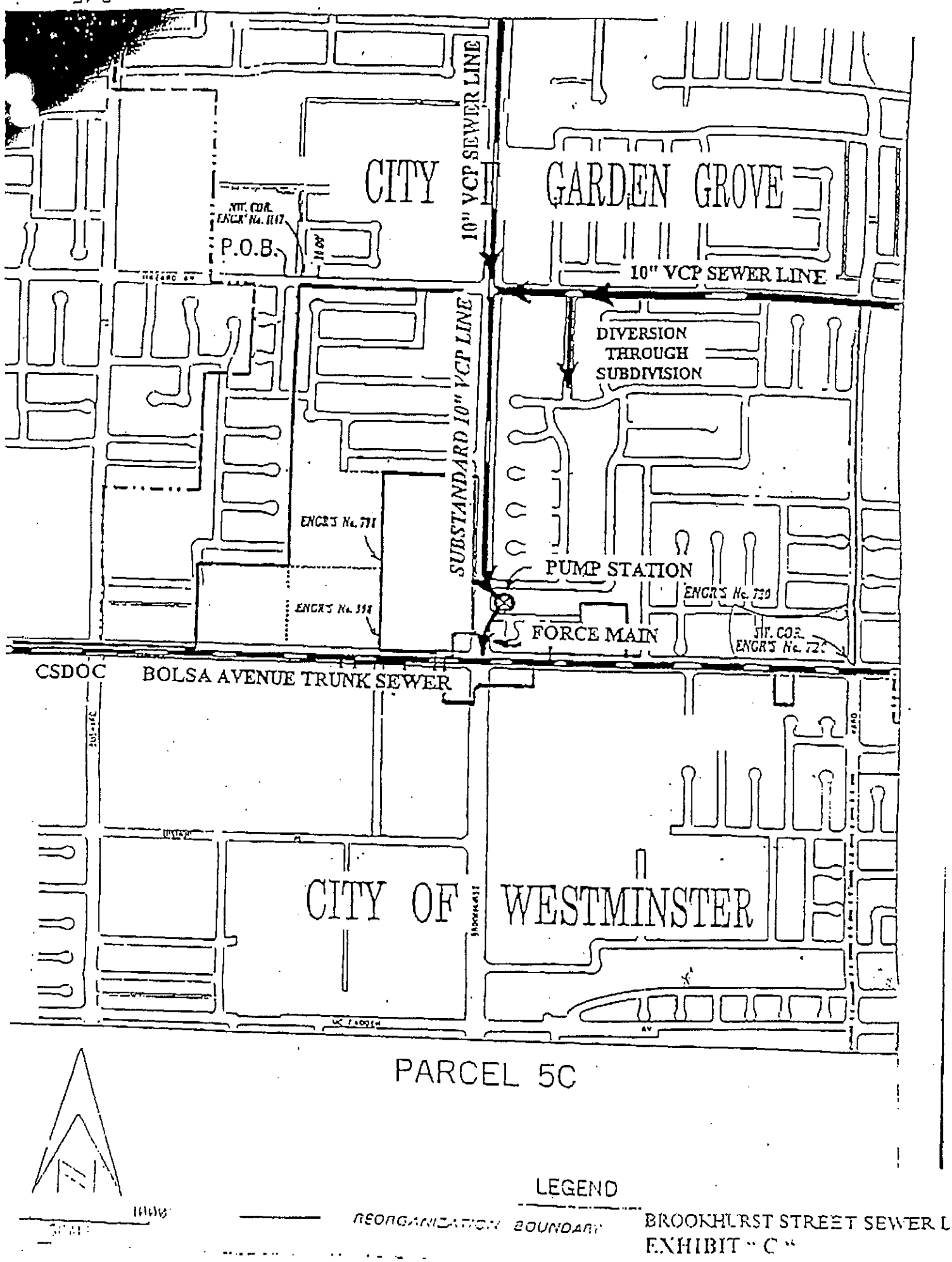

BROOKHURST STREET SEWER LIN
EXHIBIT "C"

EXHIBIT D

RECOMMENDED

TERMS AND CONDITIONS

1. The City Council of Garden Grove, acting as the future Board of Directors for the Garden Grove Subsidiary District, shall submit a plan to LAFCO for the establishment of a Sanitary District Advisory Commission. The five member commission shall advise the Board of Directors of the District concerning administrative, legal, operational, maintenance, and financial matters. The Board of Directors of the Garden Grove Sanitary District (GGSD), seated at the time the certificate of completion for this reorganization is issued, shall be offered the opportunity to become members of the new advisory commission. Their appointment shall run until their existing GGSD terms expire. The advisory commission shall include one resident of the unincorporated area and one member appointed by the Second District County Supervisor. In addition to these two appointments, one alternate for each position shall also be appointed [G.C. 56844(k)(v)].

2. The GGSD, as a subsidiary district of the City of Garden Grove, shall assume a proportionate share of the bonded indebtedness associated with the acquisition of capital equipment of the Midway City Sanitary District (MCSD) which is to be rendered surplus to MCSD by this reorganization. The City of Garden Grove's newly created subsidiary district will take, in kind, the surplus equipment. The City of Garden Grove and Midway City Sanitary District shall file an agreement with LAFCO, which describes the disposition of the surplus equipment and certificate of participation funding. Notice that the agreement for equipment funding has been reviewed by the bond counsel shall be submitted to LAFCO by the City of Garden Grove, acting as successor agency [G.C. 56844(c)].

3. The GGSD, as a subsidiary district of the City of Garden Grove, shall accept all system facilities transferred from MCSD in an "as is" condition, without any payment or repair obligation from MCSD [G.C. 56844(h)].

4. The City Council of Garden Grove, acting as the future Board of Directors for the Garden Grove Subsidiary District, shall execute an agreement with the Midway City SanitaryDistrict, to upgrade the GGSD sewer line in Brookhurst Street between Hazard Avenue and the pump station to the trunk line in Bolsa Avenue, at their sole cost and discretion. The agreement shall provide that the upgrading be completed no later than 5 years from the effective date of this reorganization or as mutually agreed by the two parties. Any maintenance and repair incurred before replacement of these facilities shall be at the City of Garden Grove's Subsidiary District's expense. The upgraded facilities shall remain the property of the City of Garden Grove's Subsidiary District. Upon replacement of these facilities, operation and maintenance expenses will be shared per the agreement of the two districts [G.C.56844(h)].

5. The City Council of Garden Grove, acting as the future Board of Directors for the Garden Grove Subsidiary District, shall execute a maintenance, operation and capacity rights agreement with the Midway City Sanitary District for the use of the sewer lines serving

parcel 4E and for correction of capacity problems in those lines within 5 years or as mutually agreed upon by both agencies. Both agencies shall also include in the agreement a provision that the costs of construction shall be based upon the proportionate amount of sewage being generated by each respective agency. Garden Grove's Subsidiary District agrees to set aside funding each year in a restricted account for its share of the costs. If construction of a sanitary diversion line to the Orange County Sanitation District trunk line in Magnolia Street is less expensive than other alternative, then both parties may mutually agree to select this alternative at the time the decision is made to construct the relief line [G.C. 56844(h)].

6. The GGSD, as a subsidiary district of the City of Garden Grove, shall assume all joint use flow agreements and maintenance agreements [G.C. 56844(j)(r)].

7. Agreement shall be reached between MCSD and the City Council of Garden Grove, acting as the future Board of Directors for the Garden Grove Subsidiary District, to continue sewer service to Parcels 4C and 4D within the City of Garden Grove [G.C. 56844(r)(v)].

8. The City Council of Garden Grove, acting as the future Board of Directors for the Garden Grove Subsidiary District, shall execute amendments of existing agreements with the respective contract solid waste franchisees serving the areas to be reorganized, and shall be completed to address those changes in service areas [G.C. 56844(r)(v)].

9. An agreement shall be reached between the City Council of Garden Grove, acting as the future Board of Directors for the Garden Grove Subsidiary District, and the Midway City Sanitary District which provides that the City's subsidiary district shall be responsible for costs incurred by MCSD for public information efforts taken by MCSD to advise the affected residents of the changes in billing process, the cost of trash collection, and other service changes. Such costs shall not exceed $5,000. As an alternative, Garden Grove may, in lieu of payment, provide notice in a form which is acceptable to MCSD [G.C. 56844(v)].

10. The City Council shall file a notice with LAFCO that the reorganization shall not adversely affect or impair the status of any employee of the District or City. As of the effective date of this reorganization, all employees of the Garden Grove Sanitary District shall become City employees. Current rates of pay, accrued vacation and sick leave, vacation and sick leave accrual rates, employee rights, seniority rights, insurance, retirement benefits, and all other benefits and programs now provided them shall continue at a level not less than that currently enjoyed [G.C.56844(l)].

11. All lands, buildings, real and personal property, and appurtenances held by the Midway City Sanitary District and within the City of Garden Grove served by the Midway City Sanitary District, as of the effective date of this reorganization, shall be transferred to the subsidiary district [G.C. 56844(h)].

Terms & Conditions
Garden Grove Reorganization No. 141
August 26, 1996

12. All lands, buildings, real and personal property, and appurtenances held by the Garden Grove Sanitary District and within the City of Westminster served by the Garden Grove Sanitary District, as of the effective date of this reorganization, shall be transferred to the Midway City Sanitary District [G.C. 56844(h)].

13. The City Council of Garden Grove, acting as the future Board of Directors for the Garden Grove Subsidiary District, is authorized but not required to continue to impose and collect all charges, fees, assessments and/or taxes previously authorized and imposed by the Midway City Sanitary District in the territory which is to be detached from Midway City Sanitary District annexed to the Garden Grove Subsidiary District. Nothing in this provision shall be deemed to limit the discretion of the Board of Directors of the Garden Grove Subsidiary District to establish and levy charges, fees, assessments and/or taxes as it determines to be necessary and appropriate [G.C. 56844(t)].

14. The Midway City Sanitary District is authorized but not required to continue to impose and collect all charges, fees, assessments and/or taxes previously authorized and imposed by the Garden Grove Sanitary District in the territory which is to be detached from the Garden Grove Sanitary District and annexed to the Midway City Sanitary. Nothing in this provision shall be deemed to limit the discretion of the Board of Directors of the Midway City Sanitary District to establish and levy charges, fees, assessments and/or taxes as it determines to be necessary and appropriate [G.C. 56844(t)].

15. The City Council of Garden Grove, acting as the future Board of Directors for the Garden Grove Subsidiary District, and Midway City Sanitary District shall provide evidence to LAFCO that all sewer flow agreements affected by this reorganization have been modified to consider the reorganized boundaries, as appropriate [G.C. 56844(j)(r)].

16. The City of Garden Grove shall assist the two surplus MCSD automated trash collection truck operators to obtain employment with the subsidiary district's private trash hauler [G.C. 56844(l)(v)].

17. Areas being annexed to the City of Garden Grove shall be subject to the City of Garden Grove's Paramedic Property Tax Override and shall become part of the Garden Grove Landscaping and Lighting Assessment District [G.C. 56844(t)].

18. The formation of Improvement District No. 1 within the Garden Grove Sanitary District is to include all territory annexing into Garden Grove Sanitary District and detaching from the Midway City Sanitary District. These areas are shown as Parcels 4 A-F on the map referenced in the LAFCO staff report. The Improvement District shall continue the existing rate structure from the Midway City Sanitary District [G.C.56844(e)].

19. The effective date of this reorganization shall be the date of recordation. In any case the effective date shall not be later than nine months after the date of the election, if required, in which a majority voted in favor of the reorganization [G.C. 56844(p) and 57202(2)].

Terms & Conditions
Garden Grove Reorganization No. 141
August 26, 1996

20. A pro rata share of the reserve funds/cash balance contained in the Recycling Reserve, Contingency Reserve, Automated Equipment Fund and Capital Reserve Fund of the Midway City Sanitary District, reflecting a balance not less than that contained in those accounts on May 31, 1996 plus any additional funds collected in the transferred areas for these funds, shall be placed in an escrow account and used for repair/upgrading of the Newland and Brookhurst lines or held in reserve for debt service. The pro rata share shall be determined by multiplying the applicable fund balances by the ratio of net transferred residential trash accounts to the total of such accounts in the Midway City Sanitary District. The ratio is approximately 17% and the amount to be transferred is approximately $415,000. The final ratio and amount will be determined by LAFCO prior to the recordation date [G.C. 56884(I)].

21. The City Council of Garden Grove agrees to defend, indemnify and hold harmless LAFCO and/or its agents, officers or employees from any claim, action or proceeding against LAFCO and/or its agents, officers and employees to attack, set aside, void or annul the approval of LAFCO concerning the proposal or any action relating to or arising out of such approval when such action is brought within the applicable statute of limitations [G.C. 56884(o)].

22. The Local Agency Formation Commission shall retain jurisdiction prior to issuance of the certificate of completion to hear and amend, if necessary, any term or condition that requires agreement between parties.

Appendix C-8

City of Santa Ana Agreement

A-8596

AGREEMENT

FOR

JOINT USE OF SEWERAGE FACILITIES

This agreement, made and entered into this 5th day of August, 19 85, between the City of Santa Ana, a municipal corporation, hereinafter referred to as "CITY", and the Garden Grove Sanitary District of Orange County, California, a sanitary district organized under the Sanitary District Act of 1923, hereinafter referred to as "DISTRICT".

W I T N E S S E T H

WHEREAS, Orange County District Reorganization No. 66 will detach approximately 1,000 acres from the DISTRICT, of which approximately 906 acres are located within CITY; and,

WHEREAS, Reorganization No. 66 will transfer to CITY the fixed assets of the detached portion of DISTRICT that are within CITY; and

WHEREAS, said Reorganization provides for DISTRICT to retain capacity rights in certain DISTRICT sewerage facilities to be transferred to CITY which will be needed by DISTRICT to transport wastewater from remaining areas of DISTRICT to the Orange County Sanitation District facilities; and,

WHEREAS, sewers transferred to CITY will remain connected to sewers retained by DISTRICT, and CITY will need capacity rights in these sewers to transport wastewater from the detached area within CITY to downstream portions of the same sewer transferred to CITY; and,

WHEREAS, a report prepared by Boyle Engineering Corporation for the City of Santa Ana entitled "Addendum to the June 1979 Engineering Report Update on Sewerage Facilities" dated July 27, 1984 indicates that certain shared sewers

within CITY or DISTRICT will not have adequate capacity for the wastewater from the planned ultimate development of the areas within DISTRICT and CITY tributary to said certain facilities; and,

WHEREAS, because capacity rights in certain sewerage facilities will be shared by DISTRICT and CITY, it is in the best interests of DISTRICT and CITY to enter into an agreement to provide for the cost sharing of maintenance of sewers in which DISTRICT and CITY will share capacity rights and to provide for funding of the construction of future sewers within CITY or DISTRICT that may be necessary to provide sufficient capacity to transport the combined ultimate wastewater flows from portions of DISTRICT and CITY to the Orange County Sanitation District facilities; and,

NOW, THEREFORE, in consideration of the payments herein provided and the several obligations hereof, the parties agree:

1. Shared Sewers

(a) CITY hereby grants to DISTRICT and DISTRICT hereby grants to CITY capacity rights so long as capacity is available in the shared sewers, the locations of which are shown on Exhibit A attached hereto and described in Exhibit B attached hereto. DISTRICT and CITY agree to use said shared sewers only to transport wastewater from those portions of DISTRICT or CITY within the tributary area as shown on said Exhibit A. The shared sewers, or portions thereof, shall be deemed to be at capacity when the measured peak flow has a depth equal to 75% of the sewer diameter.

When either party determines by field measurements that a portion of a shared sewer is flowing at capacity, as defined herein, they shall immediately notify the other party in writing, setting forth the limits, the measured flow, and the depth of the peak flow.

Upon determination and notification that a sewer is at capacity, both parties shall immediately cease issuance of any additional sewer connection permits to any tributary sewer. The cessation of issuance of sewer connection permits shall continue in force until additional sewer capacity has been constructed as provided for herein.

(b) CITY and DISTRICT agree to maintain their respective portions of the shared sewers as shown on Exhibit A in the same manner and at the same frequency as all other sewers maintained by CITY or DISTRICT.

(c) Replacement or Repair of Shared Sewers

Both parties agree that the shared sewers have a finite life and eventually, due to damage or deterioration, all or portions of the shared sewers may need to be replaced. When either party determines that a portion of a shared sewer within its jurisdiction is in need of major replacement, it shall immediately notify the other party in writing, setting forth a description and schedule of repair or replacement and the estimated cost thereof. Unless the work is required to abate a public health problem it shall be scheduled so that both parties can arrange for financing in the next following fiscal year. Work required to abate a public health problem shall be commenced immediately.

The cost of repair or replacement of each shared line shall be apportioned to each party as set forth in Exhibit B. The total cost shall include engineering, administration and construction expenses. Prior to starting the repair or replacement work, the initiating party shall bill the other party for their apportioned share. The other party shall promptly deposit the billed amount. Upon completion of the work and payment of all costs, the initiating party shall submit a report setting forth all costs incurred together with either a bill, or a refund for the difference between the actual apportioned cost and the deposit.

Any repair or replacement costing less than $5,000.00 may be done by force account. Repairs or replacements costing in excess of $5,000.00 shall be subject to a public bidding process.

If, within 30 days after notification, the notified party disagrees with the necessity or estimated cost or apportionment of the cost of the repair or replacement, they shall so notify the other party in writing. If the parties are unable to agree upon the need or cost of the repair or replacement, the matter may be submitted to arbitration as set forth in Section 4.

2. Future Sewers

It is anticipated that, as the tributary area to the shared sewers continues to develop, there will not be adequate capacity, as defined in Section 1, in some of the shared sewers. Exhibit C attached hereto shows the sizes and locations of parallel sewers and relief connections to Orange County Sanitation District facilities that are anticipated will be required in the future to provide capacity for ultimate planned development.

On or before October 1st of each year, each party shall determine whether the shared sewers within their jurisdication have sufficient capacity, as defined in Section 1, to provide service without limiting connections for the next calendar year. If it appears that adequate capacity will not be available, then the parties shall meet and determine within 60 days the size and estimated cost of a parallel relief sewer that, together with the existing sewer, will provide adequate capacity for ultimate planned development within the tributary area. Each party shall provide the estimated ultimate flows for their portion of the tributary area.

The cost of the new parallel sewer, including engineering, administration and construction shall be apportioned between the parties equal to

the ratio that each party's estimated ultimate peak flows bears to the combined ultimate peak flow.

The construction of the new line shall be scheduled to start after the next July 1st in order to permit both parties to budget the required funds.

Prior to commencing construction, the party within whose jurisdiction the new sewer will be located shall bill the other party for their apportioned share of the total cost. The other party shall promptly deposit the billed amount. Upon completion of the work, and payment of all costs, the initiating party shall submit a report setting forth all costs incurred together with either a bill or a refund for the difference between the actual apportioned cost and the deposit.

If one of the parties does not finance their apportioned share of the new parallel sewer, or relief connection, or for any other reason declines to participate, then the remaining party at their option may proceed to construct and finance a parallel sewer with capacity only for the tributary area within their jurisdiction. If this option is exercised, then the party choosing not to participate shall immediately cease issuance of sewer connection permits as provided for in Section 1(a). Such cessation of connection permits shall remain in effect until the non-participating party constructs sewer facilities with capacity for added flows from their tributary area or diverts the added flow to non-shared sewers.

3. Modifications

A pumping station in Fountain Valley now discharges sewage into the shared line in Edinger Avenue. In the event that the flow from this pumping station is discharged elsewhere, this agreement shall be modified as necessary to reflect the changed condition.

4. Arbitration

If the parties are unable to agree on the necessity, cost, or apportionment of repair or replacement of shared sewers, the matter may be submitted to arbitration before a 3-man arbitration board in the following manner:

Either party may, within 60 days after the date of the notification of the need for a repair or replacement, appoint one member of said arbitration board, giving notice thereof to the party making the first appointment to said board. The third member shall be appointed by the first two members. All members of said board shall be registered Civil Engineers in the State of California.

5. Notice

Any notice hereunder shall conclusively be deemed to have been given upon the date it is enclosed in a sealed envelope addressed to the party to whom intended at the following address:

If to the CITY: City of Santa Ana

Attention: Chief Engineer
Utilities Agency

If to the DISTRICT: Garden Grove Sanitary District

Attention: President, Board of Directors

6. Termination

The term of this agreement shall commence upon approval and execution of this document by both parties, and shall continue for so long as is necessary to carry out the purposes of this agreement.

This agreement may be terminated or amended at any time by the consent of both parties.

EXHIBIT B

Shared Sewer Location	Sewer Diameter	Located within	Apportionment[1] of Repair or Replacement Cost	
			District	City
Marty - Lewis to Siemon	8"	District	0%	100%
Marty - Lewis west to City Boundary	8"	District	44%	56%
Marty - City Boundary west to Laird	8"	City	44%	56%
Marty - Siemon to Lewis	8"	District	0%	100%
Laird - Marty to Trask	10"	City	31%	69%
Trask - Laird to Fairview	10"	City	28%	72%
Cotter - Downie to Marty	8"	City	67%	33%
Marty - Cotter to Fairview	8"	City	75%	25%
Fairview - Marty to Trask	8"	City	75%	25%
Westminster - Buena to Roxey	10"	District	0%	100%
Westminster - Roxey to Clinton	12"	District	37%	63%
Westminster - Clinton to Harper	12"	City	48%	52%
Westminster - Harper to Laurel	12"	City	42%	58%
Westminster - Laurel to Enterprise	12"	City	44%	56%
Westminster - Enterprise to Nautilus	12"	City	48%	52%
Westminster - Nautilus to east of Harbor	12"	City	51%	49%
Westminster - East of Harbor to Harbor	12"	City	54%	46%
Harbor - Westminster to Century	15"	City	39%	61%
Harbor - Century to Washington	15"	City	36%	64%
Harbor - Washington to Hazard	15"	City	25%	75%

EXHIBIT B

Shared Sewer Location	Sewer Diameter	Located within	Apportionment[1] of Repair or Replacement Cost District	City
Harbor - Hazard to 5th	15"	City	23%	77%
Harbor - 5th to 1st	15"	City	22%	78%
Harbor - Edinger to City Boundary	10"	District	0%	100%
Westminster - East of Newhope	10"	City	75%	25%
Westminster - East of Newhope to Newhope	10"	City	74%	26%
Westminster - Newhope west to City Boundary	10"	City	76%	24%
Westminster - City Boundary to Parsons	10"	District	78%	22%
Westminster - Parsons west to City Boundary	10"	District	79%	21%
Westminster - City Boundary to Rosita	10"	City	79%	21%
Westminster - Rosita to La Bonita	10"	City	79%	21%
Westminster - La Bonita to Anita	10"	City	80%	20%
Westminster - Anita to Euclid	10"	City	92%	8%
Euclid - Westminster to Juarez	15"	City	91%	9%
Euclid - Juarez to Hazard	15"	City	83%	17%
Euclid - Hazard to 5th	15"	City	67%	33%
Euclid - 5th to 1st	15"	City	62%	38%
Edinger - Harbor to 2280' east of Newhope	12"	District	35%	65%
Edinger - 2280' east to 1950' east of Newhope	12"	District	36%	64%

EXHIBIT B

Shared Sewer Location	Sewer Diameter	Located within	Apportionment[1] of Repair or Replacement Cost District	City
Edinger - 1950' east to 1620' east of Newhope	12"	District	37%	63%
Edinger - 1620' east of Newhope to City Boundary	12"	District	39%	61%
Edinger - City Boundary to Newhope	12"	City	39%	61%
Edinger - Harmon to Euclid	12"	City	33%	67%

(1) Apportionment based on ultimate average flows per report prepared by Boyle Engineering Corporation for the City of Santa Ana entitled "Addendum to the June 1979 Engineering Report Update on Sewerage Facilities" dated July 27, 1984.

·LEGEND·

CITY OF SANTA ANA BOUNDRY.

BOUNDRY OF AREA TRIBUTARY TO SHARED SEWERS.

ORANGE COUNTY SANITATION DIST. TRUNK SEWERS.

FUTURE PARALLEL SEWERS WITHIN DISTRICT.

FUTURE PARALLEL SEWERS WITHIN CITY.

FUTURE FLOW DIVERSION CONNECTION.

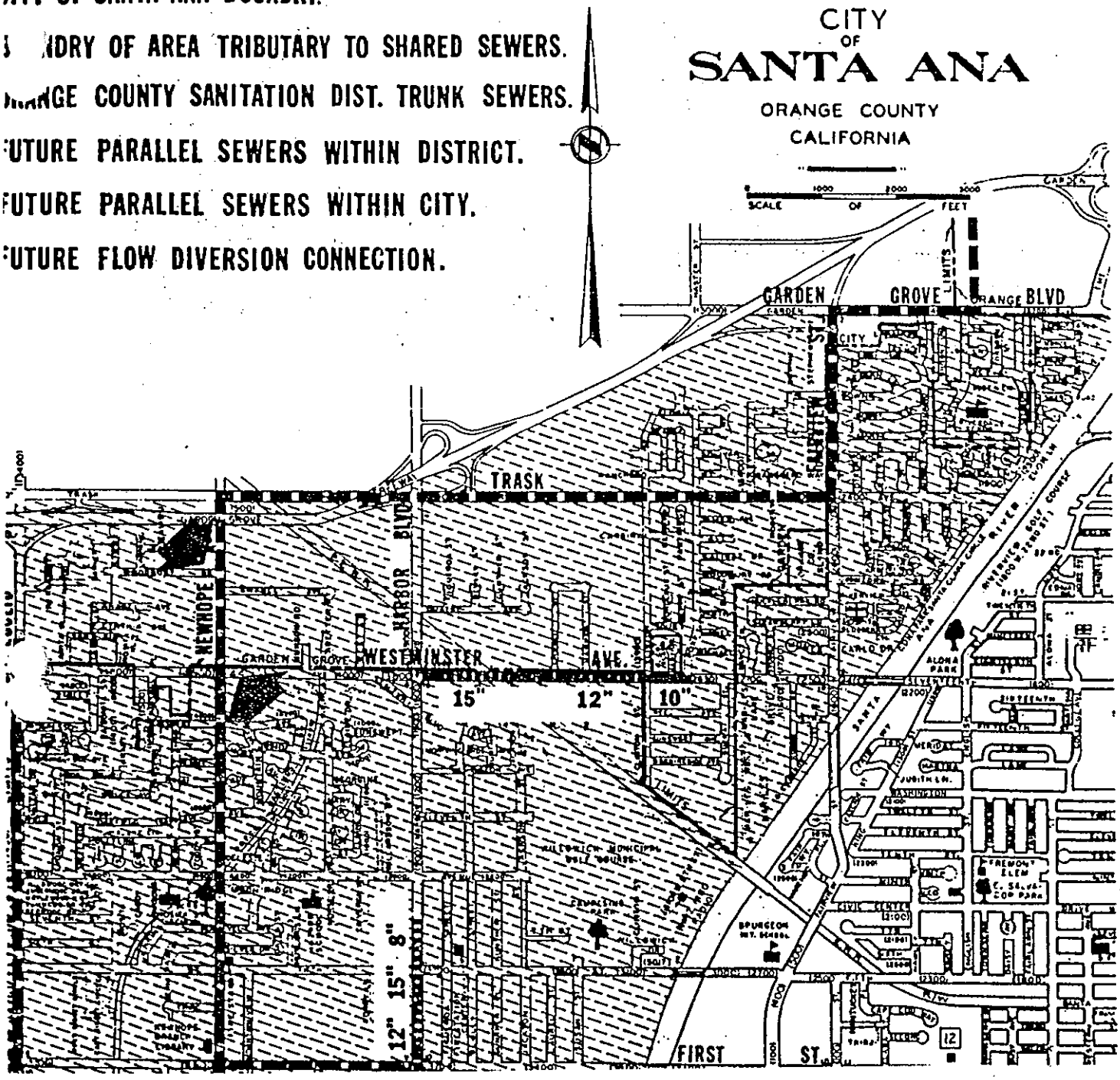

A-85-96

AGREEMENT

FOR

JOINT USE OF SEWERAGE FACILITIES

This agreement, made and entered into this 5th day of August, 19 85, between the City of Santa Ana, a municipal corporation, hereinafter referred to as "CITY", and the Garden Grove Sanitary District of Orange County, California, a sanitary district organized under the Sanitary District Act of 1923, hereinafter referred to as "DISTRICT".

W I T N E S S E T H

WHEREAS, Orange County District Reorganization No. 66 will detach approximately 1,000 acres from the DISTRICT, of which approximately 906 acres are located within CITY; and,

WHEREAS, Reorganization No. 66 will transfer to CITY the fixed assets of the detached portion of DISTRICT that are within CITY; and

WHEREAS, said Reorganization provides for DISTRICT to retain capacity rights in certain DISTRICT sewerage facilities to be transferred to CITY which will be needed by DISTRICT to transport wastewater from remaining areas of DISTRICT to the Orange County Sanitation District facilities; and,

WHEREAS, sewers transferred to CITY will remain connected to sewers retained by DISTRICT, and CITY will need capacity rights in these sewers to transport wastewater from the detached area within CITY to downstream portions of the same sewer transferred to CITY; and,

WHEREAS, a report prepared by Boyle Engineering Corporation for the City of Santa Ana entitled "Addendum to the June 1979 Engineering Report Update on Sewerage Facilities" dated July 27, 1984 indicates that certain shared sewers

Upon determination and notification that a sewer is at capacity, both parties shall immediately cease issuance of any additional sewer connection permits to any tributary sewer. The cessation of issuance of sewer connection permits shall continue in force until additional sewer capacity has been constructed as provided for herein.

(b) CITY and DISTRICT agree to maintain their respective portions of the shared sewers as shown on Exhibit A in the same manner and at the same frequency as all other sewers maintained by CITY or DISTRICT.

(c) Replacement or Repair of Shared Sewers

Both parties agree that the shared sewers have a finite life and eventually, due to damage or deterioration, all or portions of the shared sewers may need to be replaced. When either party determines that a portion of a shared sewer within its jurisdiction is in need of major replacement, it shall immediately notify the other party in writing, setting forth a description and schedule of repair or replacement and the estimated cost thereof. Unless the work is required to abate a public health problem it shall be scheduled so that both parties can arrange for financing in the next following fiscal year. Work required to abate a public health problem shall be commenced immediately.

The cost of repair or replacement of each shared line shall be apportioned to each party as set forth in Exhibit B. The total cost shall include engineering, administration and construction expenses. Prior to starting the repair or replacement work, the initiating party shall bill the other party for their apportioned share. The other party shall promptly deposit the billed amount. Upon completion of the work and payment of all costs, the initiating party shall submit a report setting forth all costs incurred together with either a bill, or a refund for the difference between the actual apportioned cost and the deposit.

the ratio that each party's estimated ultimate peak flows bears to the combined ultimate peak flow.

The construction of the new line shall be scheduled to start after the next July 1st in order to permit both parties to budget the required funds.

Prior to commencing construction, the party within whose jurisdiction the new sewer will be located shall bill the other party for their apportioned share of the total cost. The other party shall promptly deposit the billed amount. Upon completion of the work, and payment of all costs, the initiating party shall submit a report setting forth all costs incurred together with either a bill or a refund for the difference between the actual apportioned cost and the deposit.

If one of the parties does not finance their apportioned share of the new parallel sewer, or relief connection, or for any other reason declines to participate, then the remaining party at their option may proceed to construct and finance a parallel sewer with capacity only for the tributary area within their jurisdiction. If this option is exercised, then the party choosing not to participate shall immediately cease issuance of sewer connection permits as provided for in Section 1(a). Such cessation of connection permits shall remain in effect until the non-participating party constructs sewer facilities with capacity for added flows from their tributary area or diverts the added flow to non-shared sewers.

3. Modifications

A pumping station in Fountain Valley now discharges sewage into the shared line in Edinger Avenue. In the event that the flow from this pumping station is discharged elsewhere, this agreement shall be modified as necessary to reflect the changed condition.

IN WITNESS WHEREOF, the parties hereto have caused this Agreement to be executed by their respective officers, duly authorized, the provisions of which Agreement are effective as of the date first above written.

CITY OF SANTA ANA,
A Municipal Corporation

By _____
Mayor

ATTEST:

By _____
City Clerk

APPROVED AS TO FORM:

By _____
City Attorney

APPROVED AS TO CONTENT:

By _____
City Manager

GARDEN GROVE SANITARY DISTRICT,
a Sanitary District

By _____
Chairman

ATTEST:

By _____
Secretary

APPROVED AS TO FORM:

By _____
Counsel

EXHIBIT 'A'

LEGEND

- CITY OF SANTA ANA BOUNDRY.
- BOUNDRY OF AREA TRIBUTARY TO SHARED SEWERS.
- ORANGE COUNTY SANITATION DIST. TRUNK SEWERS.
- BOUNDRY OF AREA WITHIN CITY DETACHED FROM GARDEN GROVE SANITARY DISTRICT.
- SHARED SEWERS & DIAMETER TO BE MAINTAINED BY CITY.
- SHARED SEWERS & DIAMETER TO BE MAINTAINED BY DISTRICT.

CITY
OF
SANTA ANA
ORANGE COUNTY
CALIFORNIA

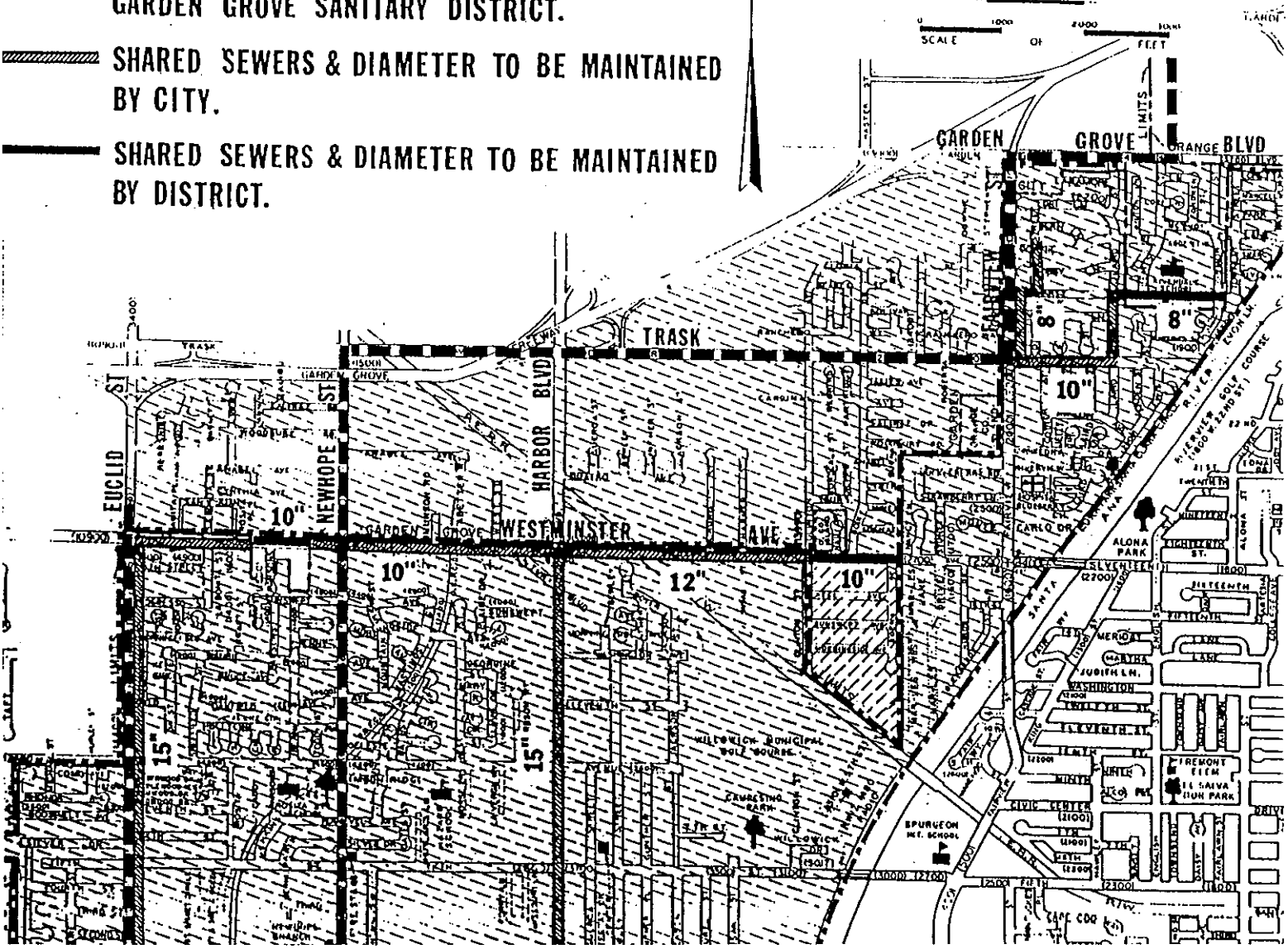

EXHIBIT B

Shared Sewer Location	Sewer Diameter	Located within	Apportionment[1] of Repair or Replacement Cost District	City
Marty - Lewis to Siemon	8"	District	0%	100%
Marty - Lewis west to City Boundary	8"	District	44%	56%
Marty - City Boundary west to Laird	8"	City	44%	56%
Marty - Siemon to Lewis	8"	District	0%	100%
Laird - Marty to Trask	10"	City	31%	69%
Trask - Laird to Fairview	10"	City	28%	72%
Cotter - Downie to Marty	8"	City	67%	33%
Marty - Cotter to Fairview	8"	City	75%	25%
Fairview - Marty to Trask	8"	City	75%	25%
Westminster - Buena to Roxey	10"	District	0%	100%
Westminster - Roxey to Clinton	12"	District	37%	63%
Westminster - Clinton to Harper	12"	City	48%	52%
Westminster - Harper to Laurel	12"	City	42%	58%
Westminster - Laurel to Enterprise	12"	City	44%	56%
Westminster - Enterprise to Nautilus	12"	City	48%	52%
Westminster - Nautilus to east of Harbor	12"	City	51%	49%
Westminster - East of Harbor to Harbor	12"	City	54%	46%
Harbor - Westminster to Century	15"	City	39%	61%
Harbor - Century to Washington	15"	City	36%	64%
Harbor - Washington to Hazard	15"	City	25%	75%

EXHIBIT B

Shared Sewer Location	Sewer Diameter	Located within	Apportionment of Repair or Replacement Cost (1) District	City
Edinger - 1950' east to 1620' east of Newhope	12"	District	37%	63%
Edinger - 1620' east of Newhope to City Boundary	12"	District	39%	61%
Edinger - City Boundary to Newhope	12"	City	39%	61%
Edinger - Harmon to Euclid	12"	City	33%	67%

(1) Apportionment based on ultimate average flows per report prepared by Boyle Engineering Corporation for the City of Santa Ana entitled "Addendum to the June 1979 Engineering Report Update on Sewerage Facilities" dated July 27, 1984.

A-85-96

AGREEMENT

FOR

JOINT USE OF SEWERAGE FACILITIES

This agreement, made and entered into this 5th day of August, 19 85, between the City of Santa Ana, a municipal corporation, hereinafter referred to as "CITY", and the Garden Grove Sanitary District of Orange County, California, a sanitary district organized under the Sanitary District Act of 1923, hereinafter referred to as "DISTRICT".

W I T N E S S E T H

WHEREAS, Orange County District Reorganization No. 66 will detach approximately 1,000 acres from the DISTRICT, of which approximately 906 acres are located within CITY; and,

WHEREAS, Reorganization No. 66 will transfer to CITY the fixed assets of the detached portion of DISTRICT that are within CITY; and

WHEREAS, said Reorganization provides for DISTRICT to retain capacity rights in certain DISTRICT sewerage facilities to be transferred to CITY which will be needed by DISTRICT to transport wastewater from remaining areas of DISTRICT to the Orange County Sanitation District facilities; and,

WHEREAS, sewers transferred to CITY will remain connected to sewers retained by DISTRICT, and CITY will need capacity rights in these sewers to transport wastewater from the detached area within CITY to downstream portions of the same sewer transferred to CITY; and,

WHEREAS, a report prepared by Boyle Engineering Corporation for the City of Santa Ana entitled "Addendum to the June 1979 Engineering Report Update on Sewerage Facilities" dated July 27, 1984 indicates that certain shared sewers

within CITY or DISTRICT will not have adequate capacity for the wastewater from the planned ultimate development of the areas within DISTRICT and CITY tributary to said certain facilities; and,

WHEREAS, because capacity rights in certain sewerage facilities will be shared by DISTRICT and CITY, it is in the best interests of DISTRICT and CITY to enter into an agreement to provide for the cost sharing of maintenance of sewers in which DISTRICT and CITY will share capacity rights and to provide for funding of the construction of future sewers within CITY or DISTRICT that may be necessary to provide sufficient capacity to transport the combined ultimate wastewater flows from portions of DISTRICT and CITY to the Orange County Sanitation District facilities; and,

NOW, THEREFORE, in consideration of the payments herein provided and the several obligations hereof, the parties agree:

1. Shared Sewers

(a) CITY hereby grants to DISTRICT and DISTRICT hereby grants to CITY capacity rights so long as capacity is available in the shared sewers, the locations of which are shown on Exhibit A attached hereto and described in Exhibit B attached hereto. DISTRICT and CITY agree to use said shared sewers only to transport wastewater from those portions of DISTRICT or CITY within the tributary area as shown on said Exhibit A. The shared sewers, or portions thereof, shall be deemed to be at capacity when the measured peak flow has a depth equal to 75% of the sewer diameter.

When either party determines by field measurements that a portion of a shared sewer is flowing at capacity, as defined herein, they shall immediately notify the other party in writing, setting forth the limits, the measured flow, and the depth of the peak flow.

Upon determination and notification that a sewer is at capacity, both parties shall immediately cease issuance of any additional sewer connection permits to any tributary sewer. The cessation of issuance of sewer connection permits shall continue in force until additional sewer capacity has been constructed as provided for herein.

(b) CITY and DISTRICT agree to maintain their respective portions of the shared sewers as shown on Exhibit A in the same manner and at the same frequency as all other sewers maintained by CITY or DISTRICT.

(c) Replacement or Repair of Shared Sewers

Both parties agree that the shared sewers have a finite life and eventually, due to damage or deterioration, all or portions of the shared sewers may need to be replaced. When either party determines that a portion of a shared sewer within its jurisdiction is in need of major replacement, it shall immediately notify the other party in writing, setting forth a description and schedule of repair or replacement and the estimated cost thereof. Unless the work is required to abate a public health problem it shall be scheduled so that both parties can arrange for financing in the next following fiscal year. Work required to abate a public health problem shall be commenced immediately.

The cost of repair or replacement of each shared line shall be apportioned to each party as set forth in Exhibit B. The total cost shall include engineering, administration and construction expenses. Prior to starting the repair or replacement work, the initiating party shall bill the other party for their apportioned share. The other party shall promptly deposit the billed amount. Upon completion of the work and payment of all costs, the initiating party shall submit a report setting forth all costs incurred together with either a bill, or a refund for the difference between the actual apportioned cost and the deposit.

Any repair or replacement costing less than $5,000.00 may be done by force account. Repairs or replacements costing in excess of $5,000.00 shall be subject to a public bidding process.

If, within 30 days after notification, the notified party disagrees with the necessity or estimated cost or apportionment of the cost of the repair or replacement, they shall so notify the other party in writing. If the parties are unable to agree upon the need or cost of the repair or replacement, the matter may be submitted to arbitration as set forth in Section 4.

2. Future Sewers

It is anticipated that, as the tributary area to the shared sewers continues to develop, there will not be adequate capacity, as defined in Section 1, in some of the shared sewers. Exhibit C attached hereto shows the sizes and locations of parallel sewers and relief connections to Orange County Sanitation District facilities that are anticipated will be required in the future to provide capacity for ultimate planned development.

On or before October 1st of each year, each party shall determine whether the shared sewers within their jurisdication have sufficient capacity, as defined in Section 1, to provide service without limiting connections for the next calendar year. If it appears that adequate capacity will not be available, then the parties shall meet and determine within 60 days the size and estimated cost of a parallel relief sewer that, together with the existing sewer, will provide adequate capacity for ultimate planned development within the tributary area. Each party shall provide the estimated ultimate flows for their portion of the tributary area.

The cost of the new parallel sewer, including engineering, administration and construction shall be apportioned between the parties equal to

the ratio that each party's estimated ultimate peak flows bears to the combined ultimate peak flow.

The construction of the new line shall be scheduled to start after the next July 1st in order to permit both parties to budget the required funds.

Prior to commencing construction, the party within whose jurisdiction the new sewer will be located shall bill the other party for their apportioned share of the total cost. The other party shall promptly deposit the billed amount. Upon completion of the work, and payment of all costs, the initiating party shall submit a report setting forth all costs incurred together with either a bill or a refund for the difference between the actual apportioned cost and the deposit.

If one of the parties does not finance their apportioned share of the new parallel sewer, or relief connection, or for any other reason declines to participate, then the remaining party at their option may proceed to construct and finance a parallel sewer with capacity only for the tributary area within their jurisdiction. If this option is exercised, then the party choosing not to participate shall immediately cease issuance of sewer connection permits as provided for in Section 1(a). Such cessation of connection permits shall remain in effect until the non-participating party constructs sewer facilities with capacity for added flows from their tributary area or diverts the added flow to non-shared sewers.

3. Modifications

A pumping station in Fountain Valley now discharges sewage into the shared line in Edinger Avenue. In the event that the flow from this pumping station is discharged elsewhere, this agreement shall be modified as necessary to reflect the changed condition.

4. Arbitration

If the parties are unable to agree on the necessity, cost, or apportionment of repair or replacement of shared sewers, the matter may be submitted to arbitration before a 3-man arbitration board in the following manner:

Either party may, within 60 days after the date of the notification of the need for a repair or replacement, appoint one member of said arbitration board, giving notice thereof to the party making the first appointment to said board. The third member shall be appointed by the first two members. All members of said board shall be registered Civil Engineers in the State of California.

5. Notice

Any notice hereunder shall conclusively be deemed to have been given upon the date it is enclosed in a sealed envelope addressed to the party to whom intended at the following address:

If to the CITY: City of Santa Ana

Attention: Chief Engineer
Utilities Agency

If to the DISTRICT: Garden Grove Sanitary District

Attention: President, Board of Directors

6. Termination

The term of this agreement shall commence upon approval and execution of this document by both parties, and shall continue for so long as is necessary to carry out the purposes of this agreement.

This agreement may be terminated or amended at any time by the consent of both parties.

IN WITNESS WHEREOF, the parties hereto have caused this Agreement to be executed by their respective officers, duly authorized, the provisions of which Agreement are effective as of the date first above written.

CITY OF SANTA ANA,
A Municipal Corporation

By _____
Mayor

ATTEST:

By _____
City Clerk

APPROVED AS TO FORM:

By _____
City Attorney

APPROVED AS TO CONTENT:

By _____
City Manager

GARDEN GROVE SANITARY DISTRICT,
a Sanitary District

By _____
Chairman

ATTEST:

By _____
Secretary

APPROVED AS TO FORM:

By _____
Counsel

EXHIBIT B

Shared Sewer Location	Sewer Diameter	Located within	Apportionment[1] of Repair or Replacement Cost District	City
Marty - Lewis to Siemon	8"	District	0%	100%
Marty - Lewis west to City Boundary	8"	District	44%	56%
Marty - City Boundary west to Laird	8"	City	44%	56%
Marty - Siemon to Lewis	8"	District	0%	100%
Laird - Marty to Trask	10"	City	31%	69%
Trask - Laird to Fairview	10"	City	28%	72%
Cotter - Downie to Marty	8"	City	67%	33%
Marty - Cotter to Fairview	8"	City	75%	25%
Fairview - Marty to Trask	8"	City	75%	25%
Westminster - Buena to Roxey	10"	District	0%	100%
Westminster - Roxey to Clinton	12"	District	37%	63%
Westminster - Clinton to Harper	12"	City	48%	52%
Westminster - Harper to Laurel	12"	City	42%	58%
Westminster - Laurel to Enterprise	12"	City	44%	56%
Westminster - Enterprise to Nautilus	12"	City	48%	52%
Westminster - Nautilus to east of Harbor	12"	City	51%	49%
Westminster - East of Harbor to Harbor	12"	City	54%	46%
Harbor - Westminster to Century	15"	City	39%	61%
Harbor - Century to Washington	15"	City	36%	64%
Harbor - Washington to Hazard	15"	City	25%	75%

EXHIBIT B

Shared Sewer Location	Sewer Diameter	Located within	Apportionment[1] of Repair or Replacement Cost District	City
Harbor - Hazard to 5th	15"	City	23%	77%
Harbor - 5th to 1st	15"	City	22%	78%
Harbor - Edinger to City Boundary	10"	District	0%	100%
Westminster - East of Newhope	10"	City	75%	25%
Westminster - East of Newhope to Newhope	10"	City	74%	26%
Westminster - Newhope west to City Boundary	10"	City	76%	24%
Westminster - City Boundary to Parsons	10"	District	78%	22%
Westminster - Parsons west to City Boundary	10"	District	79%	21%
Westminster - City Boundary to Rosita	10"	City	79%	21%
Westminster - Rosita to La Bonita	10"	City	79%	21%
Westminster - La Bonita to Anita	10"	City	80%	20%
Westminster - Anita to Euclid	10"	City	92%	8%
Euclid - Westminster to Juarez	15"	City	91%	9%
Euclid - Juarez to Hazard	15"	City	83%	17%
Euclid - Hazard to 5th	15"	City	67%	33%
Euclid - 5th to 1st	15"	City	62%	38%
Edinger - Harbor to 2280' east of Newhope	12"	District	35%	65%
Edinger - 2280' east to 1950' east of Newhope	12"	District	36%	64%

34

EXHIBIT B

Shared Sewer Location	Sewer Diameter	Located within	Apportionment[1] of Repair or Replacement Cost District	City
Edinger - 1950' east to 1620' east of Newhope	12"	District	37%	63%
Edinger - 1620' east of Newhope to City Boundary	12"	District	39%	61%
Edinger - City Boundary to Newhope	12"	City	39%	61%
Edinger - Harmon to Euclid	12"	City	33%	67%

(1) Apportionment based on ultimate average flows per report prepared by Boyle Engineering Corporation for the City of Santa Ana entitled "Addendum to the June 1979 Engineering Report Update on Sewerage Facilities" dated July 27, 1984.

EXHIBIT C

·LEGEND·

CITY OF SANTA ANA BOUNDRY.

BOUNDRY OF AREA TRIBUTARY TO SHARED SEWERS.

ORANGE COUNTY SANITATION DIST. TRUNK SEWERS.

FUTURE PARALLEL SEWERS WITHIN DISTRICT.

FUTURE PARALLEL SEWERS WITHIN CITY.

FUTURE FLOW DIVERSION CONNECTION.

CITY OF SANTA ANA
ORANGE COUNTY
CALIFORNIA

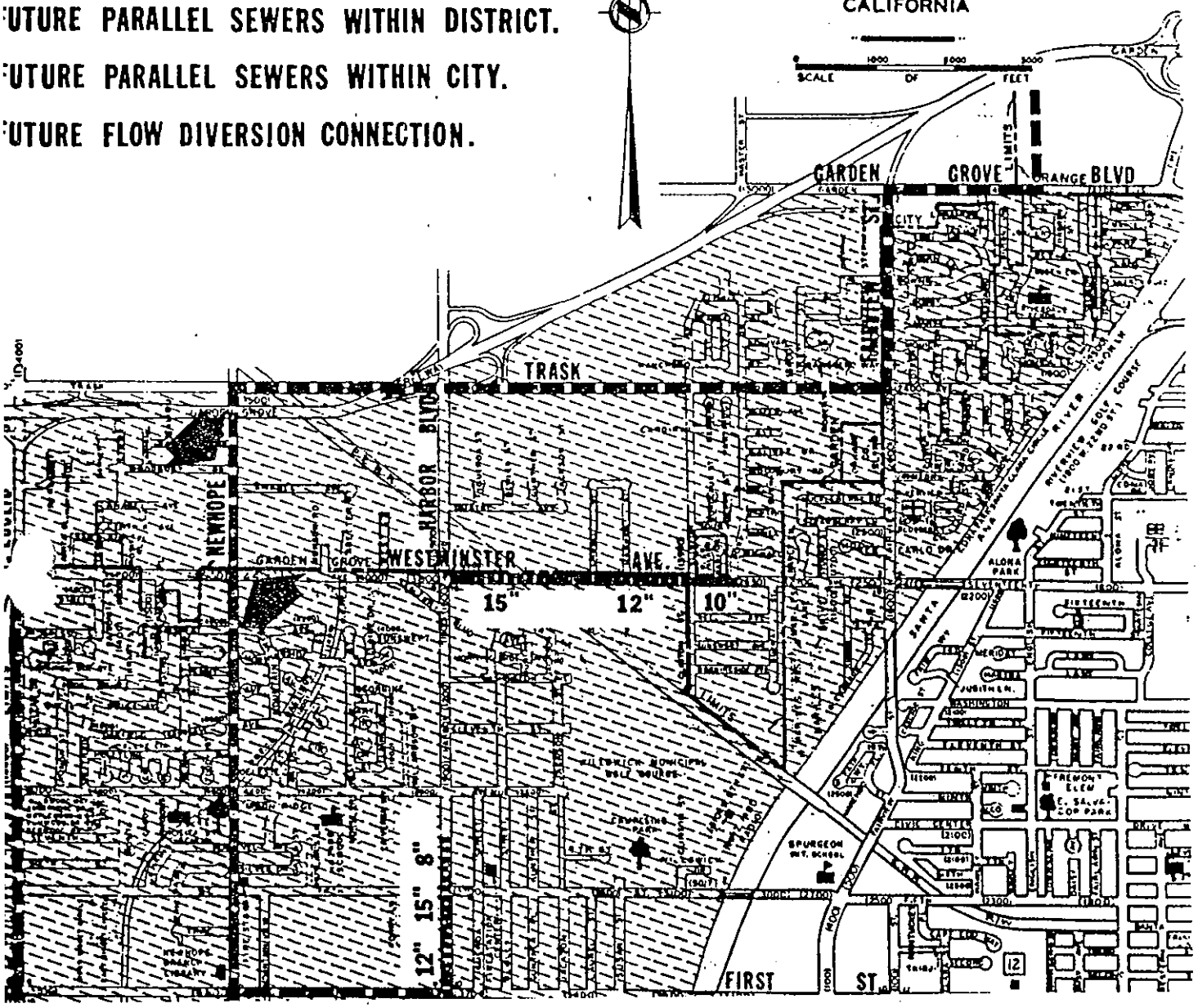

AGREEMENT

This Agreement is entered into this 12th day of January, 1988, by and between the CITY OF STANTON, hereinafter referred to as "City", a municipal corporation and GARDEN GROVE SANITARY DISTRICT, hereinafter referred to as "GGSD", a special district of the State of California.

R E C I T A L S

WHEREAS, the boundaries of the territory of the STANTON COUNTY WATER DISTRICT ("SCWD") include territory in the City of Stanton, the city of Garden Grove and a small portion of County of Orange territory along Knott Avenue, hereinafter referred to as the "KNOTT area"); and

WHEREAS, The City of Stanton is in the process of detaching all of the territory of the STANTON COUNTY WATER DISTRICT located within the boundaries of the CITY OF STANTON and all of the territory of the GGSD lying within the boundaries of the CITY OF STANTON; and

WHEREAS, said detachment will eliminate virtually all of the territory served by the SCWD except for an area of approximately 99 acres located in the CITY OF GARDEN GROVE lying south of Katella Avenue and east of Dale Avenue as shown on the Map attached hereto marked "Exhibit A" ("the 99 acres"); and

WHEREAS, it is not feasible for SCWD to remain in existence for the purpose of serving such a small area, and

WHEREAS, it is not feasible for the CITY OF STANTON to serve the 99 acre area, and

WHEREAS, GGSD has commenced proceedings to annex the 99 acres into its district boundaries on the basis that the CITY OF STANTON will compensate the GGSD as provided herein; and

WHEREAS, GGSD did commence said annexation in reliance upon said compensation agreement; and

WHEREAS, the reason for the CITY'S agreement to compensate GGSD is that there are no tax revenues flowing from the 99 acre area to support the services to be rendered and GGSD cannot afford to undertake the maintenance and service obligation without additional funds; and

WHEREAS, it would be unreasonable burden upon GGSD to undertake to service said territory without adequate revenues to pay for service.

NOW, THEREFORE, IT IS AGREED AS FOLLOWS:

1. The obligations and responsibilities of this agreement shall become effective only if the CITY OF STANTON's detachment proceeding is successfully concluded and only if the GARDEN GROVE SANITARY DISTRICT annexation of territory is also successfully concluded.

2. Upon successful completion thereof, the parties agree to proceed as follows:

a. The CITY shall clean or arrange for the cleaning of all of the lines within the 99 ACRES within three months prior to the date of commencement of service by GGSD.

b. The parties shall cooperate to complete the transfer of assets from SCWD to CITY and to GGSD in a manner such that GGSD shall receive four and two-thirds percent (4-2/3%) of the

total assets of the SCWD.

c. At such time as the assets of SCWD are transferred to CITY and to GGSD, CITY shall also either transfer the sum of $35,000.00 in cash to GGSD or commence payment of the sum of $428.50 per month on the first day of each and every month for a term of 120 consecutive months.

d. All manholes in the 99 Acre area shall be brought up to grade or payment of a sum sufficient to cause the same to be done shall be made by CITY to SCWD.

3. Immediately after execution of this agreement the parties shall complete discussions and negotiations and prepare an agreement with respect to sewer capacity rights in the lines currently under the jurisdiction of each party.

CITY OF STANTON

By _____
MAYOR

GARDEN GROVE SANITARY DIST.

By _____
PRESIDENT

By _____
SECRETARY

ATTEST:

_____
CITY CLERK

Block 5947
Module 74,75
83,84,85,
93,94,95

EXHIBIT A

LEGAL DESCRIPTION
REORGANIZATION 101
GARDEN GROVE SANITARY DISTRICT
(Detachment of territory from the Stanton County Water District and Annexation of same to the Garden Grove Sanitary District)

That portion of the Northeast Quarter of Section 25, Township 4 South, Range 11 West, as shown on a map recorded in Book 51, Page 11 of Miscelloneous Maps, Records of the County of Orange, State of California, in the City of Garden Grove, of said county, more particularily described as follows:

Beginning at a point in the existing boundary line of the Garden Grove Sanitary District as established by "Engineers No. 656-59", said point being the Southwest corner of said "Engineers No. 656-59", said point also being the intersection of the centerline of Orangewood Avenue with the centerline of Magnolia Street, as shown on a map of Tract No. 3342, recorded in Book 113, pages 15 and 16, of Miscellaneous Maps, in the office of the County Recorder of said County and State;

Thence leaving said existing boundary line, North 89° 55'50" West along said centerline of Orangewood Avenue, also being the boundary line of the Stanton County Water district a distance of 308.83 feet to the Northeasterly line of the Pacific Electric Railway Right of Way (100.00 feet wide) as shown on said map of Tract No. 3342;

Thence North 53° 18'20" West along said Northeasterly line and along said boundary line a distance of 2998.88 feet to the Westerly right-of way line of Dale Street, also being the boundary line of the City of Garden Grove, as established by Northwest Annexation No. 1 to the City of Garden Grove.

Thence North 00° 32'15" West along said boundary line of the City of Garden Grove a distance of 919.17 to the Northerly right-of-way line of Katella Avenue, also being the Northerly boundary line of the City of Garden Grove.

Thence North 89° 14'45" East along said boundary line a distance of 1329.28 feet to a point in said existing boundary line of the Garden Grove Sanitary District, as established by "Engineers No. 244", said point being in the Westerly line of said "Engineers No. 244";

Thence South 00° 12'02" West along said existing boundary line a distance of 40.00 feet to the Southwest Corner of said Engineers No. 244

Thence North 89° 14'45" East along said existing boundary line and said centerline of Katella Avenue a distance of 246.00 feet to an angle point in said existing boundary line;

Block 5947
Module 74,75
83,84,85
93,94,95

EXHIBIT A

LEGAL DESCRIPTION
REORGANIZATION 101
GARDEN GROVE SANITARY DISTRICT
(Detachment of Territory from Stanton County Water District and Annexation of same to Garden Grove Sanitary District)

Thence leaving said existing boundary line North 89° 14'45" East along said centerline of Katella Avenue a distance of 98.86 feet to a point in said existing boundary line as established by said "Engineers No. 244", said point being distant North 89° 14'45" East 344.86 feet from the Southwest corner of said "Engineers No. 244";

Thence continuing along said existing boundary line as established by said "Engineer's No. 244", "Engineers No. 790" and Engineers No. 969-62" the following courses:

North 89° 14'45" East a distance of 491.98 feet to the Southeast corner of said "Engineers No. 790";

South 00° 46'50" West a distance of 330.00 feet to the Southwest corner of said "Engineers No. 969-62";

Thence leaving said existing boundary line, continuing South 00 46'50" West along said Stanton County Water District boundary a distance of 170.00 feet;

Thence North 89° 14'45" East along said boundary a distance of 234.46 feet to an angle point in said existing boundary line of the Garden Grove Sanitary District as established by "Engineers No. 1062-63", said point being the Northwest corner of said "Engineers No. 1062-63";

Thence along said existing boundary line as established by said "Engineers No. 1062-63", "Engineers No. 210", "Engineers No. 394" and "Engineers No. 294" the following courses:

South 00° 46'50" East a distance of 174.00 feet;

North 89° 24'16" East a distance of 279.94 feet;

South 00° 46'50" East a distance of 270.78 feet;

South 89° 33'46" West a distance of 540.00 feet;

South 00° 46'50" East a distance of 764.00 feet;

North 89° 33'46" East a distance of 540.01 feet;

South 00° 46'50" East a distance of 210.78 feet to an angle point in said existing boundary line, said point being distant South 00° 46'50" East 434.16 feet from the Northwest corner of said "Engineers No. 294";

Block 5947
Module 74,75,83,84
85,93,94,95

EXHIBIT A

LEGAL DESCRIPTION
REORGANIZATION 101
GARDEN GROVE SANITARY DISTRICT

(Detachment of territory from the Stanton County Water District and Annexation of same to the Garden Grove Sanitary District)

Thence leaving said existing boundary line, continuing South 00°46'50" East along the centerline of Magnolia Street a distance of 100.00 feet to a point in said existing boundary line as established by "Engineers No. 1197-65", said point being the Northwest corner of said "Engineers No. 1197-65";

Thence continuing South 00°46'50" East along said existing boundary line as established by said "Engineers No. 1197-65", "Engineers No. 965-62" and "Engineers No. 656-59" a distance of 635.00 feet to the Point of Beginning.

The above described land contains 99.85 acres, more or less and is contiguous to the existing Garden Grove Sanitary District boundary.

All as more particularly shown on a map designated as "Exhibit B", attached hereto and by reference made a part hereof.

Prepared by:

BSI CONSULTANTS, INC.

J. Thomas Baine

J. Thomas Baine, RCE 15795

REGISTERED PROFESSIONAL ENGINEER
JOHN THOMAS BAINE
EXPIRES 6-30-89
No. 15795
CIVIL
STATE OF CALIFORNIA

This proposal does meet the approval of the Orange County Surveyors Office
C.R. Nelson, County Surveyor

By: _____
Deputy County Surveyor

Date: AUGUST 13, 1987

Appendix D-1

Sewer and Storm Drain Map

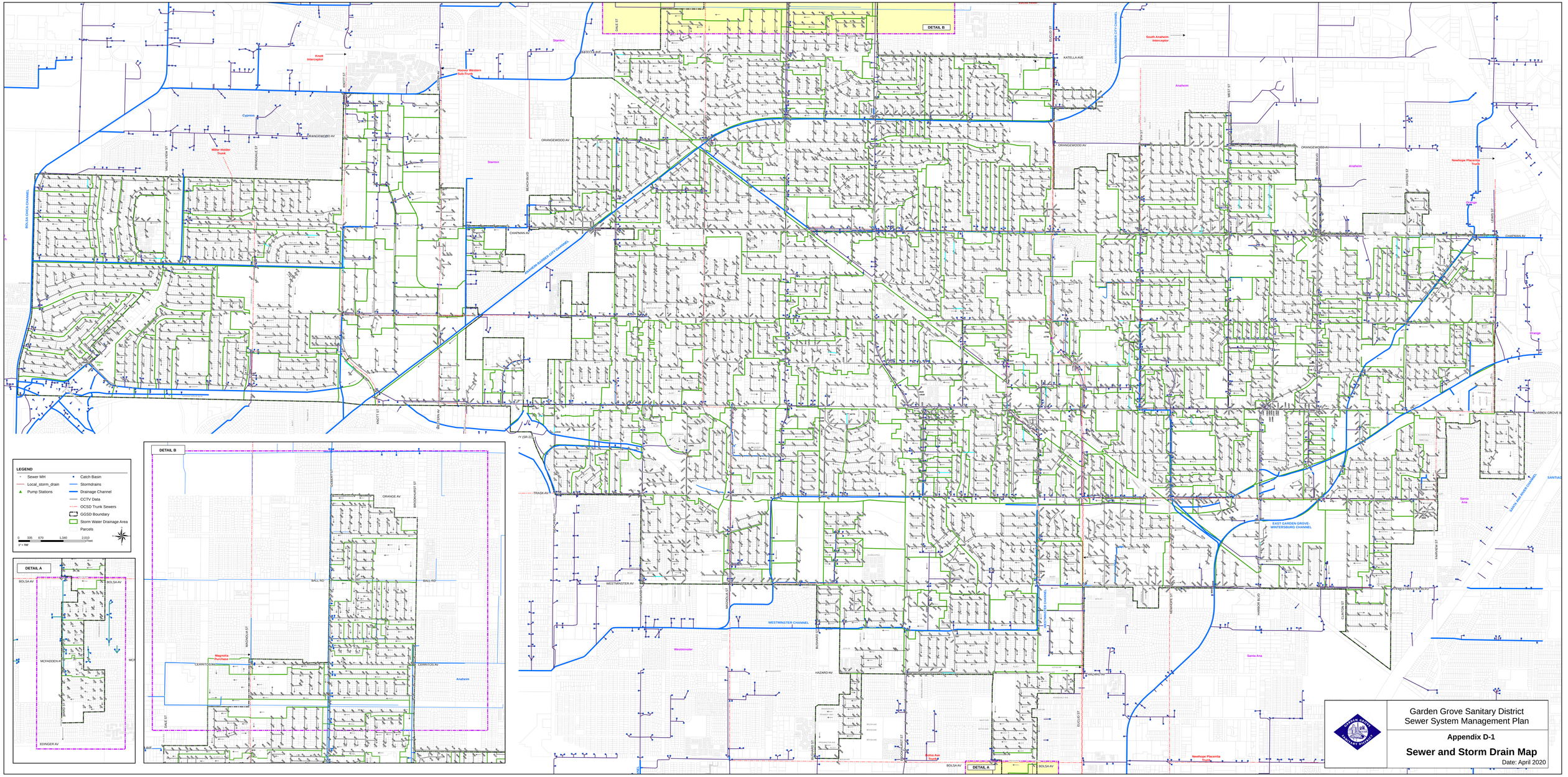
LEGEND
Sewer MH
Local_storm_drain
Pump Stations
Catch Basin
Stormdrains
Drainage Channel
CCTV Data
OCSD Trunk Sewers
GGSD Boundary
Storm Water Drainage Area
Parcels
0 335 670 1,340 2,010 Feet
1" = 700'
DETAIL A
DETAIL B
BOLSA AV
MCFADDEN AV
EDINGER AV
ORANGE AV
BALL RD
CERRITOS AV
Magnolia Purchase
Anaheim
Westminster
Santa Ana
Stanton
Cypress
Knott Interceptor
Hoover Western Sub-Trunk
Miller Holder Trunk
South Anaheim Interceptor
Newhope Placentia Trunk
Bolsa Ave Trunk
ORANGEWOOD AV
CHAPMAN AV
TRASK AV
WESTMINSTER AV
HAZARD AV
KATELLA AVE
BOLSA CHICA CHANNEL
ANAHEIM-BARBER CITY CHANNEL
WESTMINSTER CHANNEL
EAST GARDEN GROVE-WINTERSBURG CHANNEL
SANTA ANA RIVER CHANNEL
GARDEN GROVE BL
KNOTT ST
BEACH BLVD
DALE ST
EUCLID ST
HARBOR BLVD
MAGNOLIA ST
BROOKHURST ST
NEWHOPE ST
CLINTON ST
FAIRVIEW ST
LEWIS ST
MASTER ST
WEST ST
SPRINGDALE ST
VALLEY VIEW ST
BUSHARD ST
Garden Grove Sanitary District
Sewer System Management Plan
Appendix D-1
Sewer and Storm Drain Map
Date: April 2020

Appendix D-2

Pump Station Description

APPENDIX D-2

PUMP STATION DESCRIPTION

D2-1 Belgrave Pump Station

The Belgrave Sewage Pump Station is submersible pump station located adjacent to and behind 5856 Belgrave Avenue, Garden Grove, CA. The pump station is located within a Montessori school parking lot, just north of Belgrave Channel, an Orange County Flood Control District facility. The station was originally constructed in the early 1960's by the Midway City Sanitary District and upgraded/rebuilt in 2013 by the Garden Grove Sanitary District. The ground elevation at the pump station site is 29.0 ft amsl.

Belgrave Pump Station serves a 277.8 acre tributary area consisting of mostly low density residential, as well as some medium density, community residential, and light commercial areas.

Pumps

Belgrave Pump Station has two (2) WEMCO Hydrostal submersible pumps (Model F6K-M) with screw-centrifugal impellers. The pumps are driven by 60 HP motors. Per the certified pump testing curves, the pump deliver 1,400 gpm at a total dynamic head of 86 to 89 feet when operating at 1750 rpm. The Garden Grove Sanitary District has an identical spare pump, which can be installed at the facility if one pump has to be removed for service.

Wet Well

The wet well is a reinforced concrete, T-Lock lined rectangular structure with dimensions 7' by 11.17', and 19.83' high. The bottom of the structure is located at elevation 8.0 ft. amsl.

Forcemain

The wastewater tributary to the Belgrave Pump Station is pumped through approximately 3,700 ft of 12 inch diameter DR 14 PVC forcemain piping. The forcemain was constructed in 1999. It extends from the south side of the dry well, towards the Belgrave Channel, and east along the north side of the channel past Valley View, to the OCSD's Miller-Holder Trunk Sewer located in Springdale Street.

D2-2 Tiffany Pump Station

The Tiffany Sewage Pump Station is submersible pump station located at 12775 Valley View St. Garden Grove, CA. It has a ground surface elevation of 24.74 ft amsl. The station sits at the southwest corner of an office complex parking lot located on the south west corner of Valley View St and Tiffany Ave. The station was originally constructed in the early 1960's by the Midway City Sanitary District and transferred to the Garden Grove Sanitary District in 1997. The Garden Grove Sanitary District constructed the new Tiffany Pump Station in 2010.

Tiffany Pump Station serves a 222.2 acre tributary area consisting of mostly low density residential with some light commercial areas.

Pumps

Tiffany Pump Station has two (2) WEMCO Hydrostal submersible pumps (Model F6K-H) with screw-centrifugal impellers. The pumps are driven by 75 HP motors. Per the certified pump curves, the pumps deliver 1,560 gpm at a total dynamic head of 104 feet when operating at 1785 rpm.

Wet Well

The wet well is a reinforced concrete, T-Lock lined rectangular structure with overall inside dimensions of 19.67' wide, 29' long, and 29' high at the operational wet well. The bottom elevation is -5.26 ft. amsl. The wet well is divided onto an operational storage section which is 12' long, and an emergency storage section which is 16' long. The emergency storage is separated from the pump operational storage by a 1' thick and 7' high weir structure (top elevation of 8.21 feet amsl).

Forcemain

The wastewater tributary to the Tiffany Pump Station is pumped through approximately 5,370 ft of 12 inch diameter PVC pipe. The forcemain extends from the north-east side of the dry well. It then extends south-east on the north side of the Garden Grove Freeway off ramp at Valley View Street, and east on the north side of the Garden Grove Freeway to the OCSD's Miller-Holder Trunk Sewer located in Springdale Street.

D2-3 Partridge Pump Station

The Partridge Sewage Pump Station is submersible facility located to the east of Partridge Street cul-de-sac north of the Thunderbird Mobile home Park, south of Garden Grove Boulevard. The station was completed in 2010.

Tiffany Pump Station serves a 14.0 acre tributary area consisting of mostly low medium density residential, office professional, and open space.

Pumps

Partridge Pump Station has two submersible pumps with 120 gpm capacity at 17' total dynamic head.

Wet Well

The wet will is an 8-foot diameter precast concrete structure that is 19.75' tall. The bottom elevation is 88 feet amsl.

Forcemain

The wastewater tributary to the Partridge Pump Station is pumped through approximately 410 ft of 4 inch diameter PVC forcemain. The forcemain extends north from the pump station along Partridge Street to the gravity sewer at Partridge and Garden Grove Boulevard.

Appendix D-3

CCTV Database

Appendix D-3

| Phase | Priority | Ranking | Repair Completion Date | 2018_Project | Contractor | Tape No. | DVD No. | Inspection No. | Reversal Tape No. | Reversal DVD No. | Reversal Inspec. No. | DVD Watched?(Y) | Location | Street Name | CCTV Date | Existing MH ID Start | Existing MH ID End | Previous MH ID Start | Previous MH ID End | Direction of Camera | Pipe Existing Sewer ID | Pipe Previous Sewer I.D. | Pipe Size (in) | Pipe Material | Pipe Joint Length (ft) | Pipe GIS Comment | Length (ft) | CCTV Length (ft) | Structural Defect Coding: Crack C L | C | M | S | H | Fracture F L | C | M | S | H | Broken B SV | VV | Hole H SV | VV | Joint J O S | M | L | S | M | L | A | V | Deformed D | Collapsed Pipe X | H | P | Surface Damage S | Lining Failure LF | Point Repair RP | Sags WL | S | PACP Quick Struct Rating | Total Structural Defects | Total Structural Defect Score | Structural Defect Index | Operational and Maintenance: Deposits AGS | AE B | % | L | AE % | Other Z | % | Roots (R) Fine (F) B | L | J | C | Tap (T) B | L | J | C | Medium (M) B | L | J | C | Ball (B) B | L | J | C | Infiltration I | Obstacles OB | Other Z | % | Vermin C | R | PACP Quick Maint Rating | Total O&M Defects | Total O&M Defect Score | O&M Defect Index | Construction Features: Tap (Lateral) T FD | FL | BI | BD | Line L D | L | U | R | LD | RD | Intruding Seal Material IS SRH | SRB | SRL | Z | Miscellaneous M SA | CU | MO | Total Construction Features | Reasons for Survey Aband | GIS Identified Abandoned | Repair Description | Comments | Recommendations |
|---|---|---

Appendix D-3

| Phase | Priority | Ranking | Repair Completion Date | 2018_Project | Contractor | Tape No. | DVD No. | Inspection No. | Reversal Tape No. | Reversal DVD No. | Reversal Inspec. No. | DVD Watched? (Y) | Location | Street Name | CCTV Date | Existing MH ID Start | Existing MH ID End | Previous MH ID Start | Previous MH ID End | Direction of Camera | Pipe Existing Sewer ID | Pipe Previous Sewer I.D. | Pipe Size (in) | Pipe Material | Pipe Joint Length (ft) | Pipe GIS Comment | Pipe Length (ft) | Pipe CCTV Length (ft) | Structural Defect Coding: Crack C | Crack M | Crack S | Crack H | Fracture F | Fracture L | Fracture C | Fracture M | Fracture S | Fracture H | Broken B | Broken SV | Hole H | Joint VV | Joint SV | Joint VV | Joint O | Joint S | Joint M | Joint L | Joint S | Joint M | Joint L | Joint A | Joint V | Joint H | Joint P | Deformed D | Collapsed Pipe X | Surface Damage S | Lining Failure LF | Point Repair RP | Slope S | WL | PACP Quick Struct Rating | Total Structural Defects | Total Structural Defect Score | Structural Defect Index | Operational and Maintenance: Deposits AGS | Deposits AE B | Deposits AE % | Deposits AE L | Deposits AE % | Deposits Other Z | Deposits Other % | Roots (R) Fine (F) B | Roots (R) Fine (F) L | Roots (R) Fine (F) J | Roots (R) Tap (T) C | Roots (R) Tap (T) B | Roots (R) Tap (T) L | Roots (R) Tap (T) J | Roots (R) Medium (M) C | Roots (R) Medium (M) B | Roots (R) Medium (M) L | Roots (R) Medium (M) J | Roots (R) Ball (B) C | Roots (R) Ball (B) B | Roots (R) Ball (B) L | Roots (R) Ball (B) J | Infiltration I | Obstacles OB | Obstacles Other C | Obstacles Other Z | Obstacles Other % | Vermin C | Vermin R | PACP Quick Maint Rating | Total O&M Defects | Total O&M Defect Score | O&M Defect Index | Construction Features: Tap (Lateral) T FD | Tap (Lateral) T FL | Tap (Lateral) T BI | Tap (Lateral) T BD | Line D | Line L | Line I | Line U | Line R | Line LD | Intruding Seal Material IS RD | IS SRH | IS SRB | IS SRL | IS Z | Miscellaneous M SA | M CU | M MC | Total Construction Feature | Reasons for Survey Aband | GIS Identified Abandoned | Repair Description | Comments | Recommendations |
|---|---|---

Appendix D-3

| Phase | Priority | Ranking | Repair Completion Date | 2018_Project | General: Contractor | Tape No. | DVD No. | Inspection No. | Reversal Tape No. | Reversal DVD No. | Reversal Inspec. No. | DVD Watched? (Y) | Location: Street Name | CCTV Date | Existing MH ID: Start | Existing MH ID: End | Previous MH ID: Start | Previous MH ID: End | Direction of Camera | Pipe: Existing Sewer ID | Pipe: Previous Sewer ID | Pipe: Size (in) | Pipe: Material | Pipe: Joint Length (ft) | Pipe: GIS Comment | Length (ft) | CCTV Length (ft) | Structural Defect Coding: Crack C | Fracture F | Broken B | Hole H | Joint J | Deformed D | Collapsed Pipe X | Surface Damage S | Lining Failure LF | Point Repair RP | Sags WL | PACP Quick Struct Rating | Total Structural Defects | Total Structural Defect Score | Structural Defect Index | Operational and Maintenance: Deposits AGS | Deposits AE B | Deposits AE % | Deposits AE L | Deposits AE % | Deposits Other Z | Deposits Other % | Roots (R) Fine (F) B | Roots (R) Fine (F) L | Roots (R) Fine (F) J | Roots (R) Tap (T) C | Roots (R) Tap (T) B | Roots (R) Tap (T) L | Roots (R) Tap (T) J | Roots (R) Tap (T) C | Roots (R) Medium (M) B | Roots (R) Medium (M) L | Roots (R) Medium (M) J | Roots (R) Ball (B) C | Roots (R) Ball (B) B | Roots (R) Ball (B) L | Roots (R) Ball (B) J | Roots (R) Ball (B) C | Infiltration I | Obstacles O | Obstacles Other C | Obstacles Other Z | Obstacles Other % | Vermin V C | Vermin V R | PACP Quick Maint Rating | Total O&M Defects | Total O&M Defect Score | O&M Defect Index | Construction Features: Tap (Lateral) T FD | T FL | T BI | T BD | Line L D | L L | L U | L R | L LD | Intruding Seal Material IS RD | IS SRH | IS SRB | IS SRL | IS Z | Miscellaneous M SA | M CU | M MC | Total Construction Feature | Reasons for Survey Aborted | GIS Identified Abandoned | Repair Description | Comments | Recommendations |
|---|---|---

Appendix D-3

| Phase | Priority | Ranking | Repair Completion Date | 2018_Project | Contractor | Tape No. | DVD No. | Inspection No. | Reversal Tape No. | Reversal DVD No. | Reversal Inspec. No. | DVD Watched? (Y) | Location | Street Name | CCTV Date | Existing MH ID Start | Existing MH ID End | Previous MH ID Start | Previous MH ID End | Direction of Camera | Existing Sewer ID | Previous Sewer ID | Size (in) | Material | Joint Length (ft) | GIS Comment | Length (ft) | CCTV Length (ft) | Crack L | Crack C | Crack M | Crack S | Crack H | Fracture L | Fracture C | Fracture M | Fracture S | Fracture H | Broken SV | Broken VV | Hole SV | Hole VV | Joint O | Joint S | Joint M | Joint L | Joint S | Joint M | Joint L | Joint A | Deformed D | Deformed V | Collapsed/ Pipe H | Collapsed/ Pipe P | Surface Damage S | Lining Failure LF | Point Repair RP | Sags S | Sags WL | PACP Quick Struct Rating | Total Structural Defects | Total Structural Defect Score | Structural Defect Index | AGS | Deposits AE B | Deposits AE % | Deposits AE L | Deposits AE % | Deposits Other Z | Deposits Other % | Roots (R) Fine (F) B | Roots (R) Fine (F) L | Roots (R) Tap (T) J | Roots (R) Tap (T) C | Roots (R) Tap (T) B | Roots (R) Medium (M) L | Roots (R) Medium (M) J | Roots (R) Medium (M) C | Roots (R) Ball (B) B | Roots (R) Ball (B) L | Roots (R) Ball (B) J | Roots (R) Ball (B) C | Infiltration I | Obstacles OB | Obstacles Other O | Obstacles Other Z | Obstacles Other % | Vermin C | Vermin R | PACP Quick Maint Rating | Total O&M Defects | Total O&M Defect Score | O&M Defect Index | Tap (Lateral) T FD | Tap (Lateral) T FL | Tap (Lateral) T BI | Tap (Lateral) T BD | Line L D | Line L L | Line L U | Line L R | Line L LD | Intruding Seal Material IS RD | Intruding Seal Material IS SRH | Intruding Seal Material IS SRB | Intruding Seal Material IS SRL | Intruding Seal Material IS Z | Miscellaneous M SA | Miscellaneous M CU | Miscellaneous M MC | Total Construction Feature | Reasons for Survey Aborted | GIS Identified Abandoned | Repair Description | Comments | Recommendations |
|---|---|---

Appendix D-3

| Phase | Priority | Ranking | Repair Completion Date | 2018_Project | Contractor | Tape No. | DVD No. | Inspection No. | Reversal Tape No. | Reversal DVD No. | Reversal Inspec. No. | DVD Watched? (Y) | Location | Street Name | CCTV Date | Existing MH ID Start | Existing MH ID End | Previous MH ID Start | Previous MH ID End | Direction of Camera | Pipe Existing Sewer ID | Pipe Previous Sewer I.D. | Pipe Size (in) | Pipe Material | Pipe Joint Length (ft) | GIS Comment | Length (ft) | CCTV Length (ft) | Structural Defect Coding: Crack C L | C M | S H | Fracture F L | C M | S H | Broken B SV | Hole H VV | Joint SV VV | O S | J M | L S | M L | A | Deformed D V | Collapsed Pipe X H | Surface Damage P | S | Lining Failure LF | Point Repair RP | Sags WL S | PACP Quick Struct Rating | Total Structural Defects | Total Structural Defect Score | Structural Defect Index | Operational and Maintenance: Deposits AGS | Roots (R) AE B | AE % | AE L | Other % | Other Z | Other % | Fine (F) B | Tap (T) L | Medium (M) J | Ball (B) C | Infiltration I | Obstacles OB C | Other Z | Other % | Vermin V C | Vermin R | PACP Quick Maint Rating | Total O&M Defects | Total O&M Defect Score | O&M Defect Index | Construction Features: Tap (Lateral) T FD | T FL | T BI | T BD | Line L D | L L | L U | L R | L LD | Intruding Seal Material IS RD | IS SRH | IS SRB | IS SRL | IS Z | Miscellaneous M SA | M CU | M MC | Total Construction Features | Reasons for Survey Aborted | GIS Identified Abandoned | Repair Description | Comments | Recommendations |
|---|---|---

Appendix D-3

Phase	Priority	Ranking	Repair Completion Date	2018_Project	Contractor	Tape No.	DVD No.	Inspection No.	Reversal Tape No.	Reversal DVD No.	Reversal Inspec. No.	DVD Watched? (Y)	Location	Street Name	CCTV Date	Existing MH ID Start	Existing MH ID End	Previous MH ID Start	Previous MH ID End	Direction of Camera	Existing Sewer ID	Previous Sewer ID	Size (in)	Material	Joint Length (ft)	GIS Comment	Length (ft)	CCTV Length (ft)	PACP Quick Struct Rating	Total Structural Defects	Total Structural Defect Score	Structural Defect Index	PACP Quick Maint Rating	Total O&M Defects	Total O&M Defect Score	O&M Defect Index	Repair Description	Comments	Recommendations
4	3_Moderate	50					6	2252				Y	ANTIGUA		8/2/2006	9185	9184	MHM010024	MHM010022	U/S	4396	SPM010007	8	VCP			310	589.8		3	4	1.33		234	456	1.95			0			
1	3_Moderate	51			X		27		11				x	12755 Gilbert St.		3/22/2004	8455	8456	MHL120002	MHL120003	DS	3114	SPL120003	8	VCP	3		333	330		31	1.15			21	2.63			Replace pipe
2	3_Moderate	51					R045	7				Y	HARBOR BLVD		10/27/2005	12116	12117	MHS090001	MHS100011	D/S	5778	SPS090017	8	VCP			383	381.5		18	53			16	32					
3	3_Moderate	51			GGSD		P COU NTY 3 A	3					REGAL		10/14/2007	10361	10360	MHK040004	MHK040002	D/S	4773	SPK040009	8	VCP			267	268		12	18	1.50		2	2	1.00			
4	3_Moderate	51					6	2252				Y	ANTIGUA		8/2/2006	9186	9185	MHM010024	MHM010022	U/S	4490	SPM010008	8	VCP			284	589.8		3	4	1.33		234	456	1.95			0			
1	3_Moderate	52	2017-07-27			14		17				x	10000 Russell Ave.		3/2/2004	10717	11317	MHN140034	MHN140035	DS	3086	SPN140039	6	VCP	2		355	195		30	2.73			0	0.00			Removed 4" break in tap and installed 6" x 4" wye.		Replace pipe
2	3_Moderate	52					R005	3				Y	MACNAB ST		8/1/2005	10310	10315	MHK080015	MHK080020	D/S	5891	SPK080019	8	VCP			345	341.5		20	52			99	197					
3	3_Moderate	52			GGSD		P COU NTY 3 A	4					MAC MURRAY		10/14/2007	10361	10362	MHK040004	MHK040005	U/S	4771	SPK040006	8	VCP			280	278		8	17	2.13		0	0	0.00				
4	3_Moderate	52					4	2213				Y	CLEARBROOK		6/27/2006	9315	8986	MHM000014	MHM000024	U/S	4525	SPM000016	8	VCP			266	263.8		2	6	3.00		106	205	1.93		Multiple reaches were evaluated with one inspection. Several small to medium joint offsets	Pipe is in good condition. Very small trib area. No immediate action
1	3_Moderate	53				18		20				x	13342 Deanann		3/9/2004	11301	11302	MHN140019	MHN140020	DS	2900	SPN140008	8	VCP	3		301	294		30	2.14			8	0.13			Reline
2	3_Moderate	53					G022	6				Y	WAVERLY DR		8/16/2005	12953	12920	MHP080026	MHP090020	D/S	6235	SPP080020	8	VCP			332	316.3		21	51			4	9			314.2' (D/SL) JOM, LINE= DOWN AND RIGHT	
3	3_Moderate	53			GGSD		P COU NTY 3C	6					MAC		10/13/2007	10364	10358	MHK040006	MHK040001	D/S	4777	SPK040008	8	VCP			256	253		4	5	1.25		0	0	0.00				
4	3_Moderate	53					13	2383				Y	CANTON		10/26/2006	8974	8973	MHM040008	MHM040015	U/S	4413	SPM040039	8	VCP			285	589.9		3	6	2.00		180	356	1.98		Multiple reaches were evaluated with one inspection.		
2	3_Moderate	54					G035	6				Y	REXFORD RD		9/6/2005	12840	12810	MHQ100018	MHQ100019	D/S	6462	SPQ100044	8	VCP			340	347.1		19	49			51	100			CONTINUOUS FRACTURE CIRCUMFERENTIAL		
3	3_Moderate	54			GGSD		P COU NTY 3B	1					KATELLA		10/24/2007	10356	10355	MHK050047	MHK050048	D/S	4780	SPK050049	8	VCP			380	373		3	6	2.00		52	104	2.00				
4	3_Moderate	54					13	2383				Y	CANTON		10/26/2006	8965	8974	MHM040008	MHM040015	U/S	4414	SPM040040	8	VCP			285	589.9		3	6	2.00		180	356	1.98		Multiple reaches were evaluated with one inspection.		
1	3_Moderate	55		X		20		1				x	12571 Leroy Ave.		3/9/2004	8478	8479	MHL110036	MHL110037	DS	3140	SPL110033	8	VCP	3		370	372		29	2.23			45	2.07	1			Replace pipe
2	3_Moderate	55					R049	5				Y	BANNER DR		11/2/2005	11980	11985	MHR140027	MHR140029	D/S	3861	SPR140029	8	VCP			280	280.9		23	49			3	7					
3	3_Moderate	55			GGSD		P COU NTY 3B	1					KATELLA		10/24/2007	10355	10370	MHK050048	MHK050049	D/S	4779	SPK050050	8	VCP			370	370		16	29	1.81		73	146	2.00				
4	3_Moderate	55					10	2327				Y	HARLE		9/25/2006	8952	8951	MHM030028	MHM030027	U/S	3663	SPM030039	8	VCP			375	375.4		1	2	2.00		101	222	2.20			0	
1	3_Moderate	56		X		8		19				x	12551 Fletcher Dr.		2/18/2004	10690	10691	MHN110027	MHN110028	DS	2625	SPN110034	8	VCP	3		330	327		28	3.50			3	0.74				Replace pipe
2	3_Moderate	56					G038	5					DORADA AV		9/12/2005	11713	11720	MHQ110004	MHQ110011	D/S	6283	SPQ110037	8	VCP			255	264.9		21	48			0	0			CONTINUOUS FRACTURE CIRCUMFERENTIAL		
3	3_Moderate	56			PPT		21	5					BLANCHE		6/28/2007	8526	8527	MHK090020	MHK090021	D/S	2015	SPK090031	8	VCP			300	285		1	4	4.00		0	0	0.00				
4	3_Moderate	56					MIXE D 3	2470				Y	RUSTIC		1/15/2007	9636	9639	MHL040022	MHL040026	U/S	5525	SPL040026	8	VCP			256	256.7		1	1	1.00		20	39	1.95			0	
1	3_Moderate	57		X		34		11				x	12845 Adelle St.		4/5/2004	8425	8426	MHK120027	MHK120028	DS	3403	SPK120029	8	VCP	3.5		343	336		28	2.55			3	0.08				Reline, Clear deposit
2	3_Moderate	57					G006	11					MACNAB ST		7/19/2005	7992	7993	MHK070016	MHK070017	D/S	1848	SPK070015	8	VCP			310	316.8		17	48			1	2					
3	3_Moderate	57			PPT		20	42					AMY		6/26/2007	8592	8030	MHK090026	MHK090025	U/S	1883	SPK090022	8	VCP			160	157		1	3	3.00		0	0	0.00				
4	3_Moderate	57					MIXE D 3	2468				Y	REGAL		1/15/2007	9636	9643	MHL040022	MHL040021	U/S	5520	SPL040021	8	VCP			318	316.2		6	10	1.67		10	22	2.20			0	
1	3_Moderate	58		X		38		5				x	13332 Wilson St.		4/12/2004	7688	7689	MHK140038	MHK140039	DS	719	SPK140035	8	VCP	3		370	372		28	2.15			37	0.99				Reline, Cut roots
3	3_Moderate	58			PPT		20	39					AMY		6/26/2007	8532	8533	MHK090029	MHK090030	D/S	1802	SPK090037	8	VCP			265	252		3	11	3.67		0	0	0.00				
4	3_Moderate	58					12	2358				Y	CRESTWOOD		10/10/2006	8961	8960	MHM040006	MHM040004	U/S	3671	SPM040028	8	VCP			285	572.6		4	8	2.00		86	180	2.09		Multiple reaches were evaluated with one inspection.		
1	3_Moderate	59					19		8				x	9721 Stanford Ave.		3/8/2004	11550	12030	MHM120018	MHM120020	DS	2736	SPM120018	8	VCP	3		346	341		28	2.15			17	1.54	1			Replace pipe
2	3_Moderate	59					M005	13					VONS DR		8/10/2005	10837	10840	MHL060032	MHL060035	D/S	5231	SPL060036	8	VCP			332	331.8		21	47			8	9					
3	3_Moderate	59			PPT		23	25					LAMPSON		7/7/2007	9097	9098	MHK110034	MHK110035	D/S	3241	SPK110017	12	VCP			120	304		4	10	2.50		0	0	0.00				
4	3_Moderate	59					7	2280				Y	PERDIDO		8/22/2006	9183	9182	MHM020005	MHM010021	U/S	4395	SPM020006	8	VCP			380	620.2		3	5	1.67		272	528	1.94		Multiple reaches were evaluated with one inspection.		
1	3_Moderate	60					12	11				x	13311 Adland St.		2/27/2004	11203	11204	MHO140014	MHO140015	DS	2528	SPO140052	8	VCP	3		316	318		28	2.33			5	0.03				Reline, Clear D&R
2	3_Moderate	60					R029	4				Y	9TH ST		9/20/2005	12478	12479	MHQ120003	MHQ120004	D/S	6543	SPQ120007	8	VCP			316	315.1		17	47			112	225			HIGH FLOW		
3	3_Moderate	60			PPT		23	27					LAMPSON		7/7/2007	9099	9105	MHK110036	MHK110037	D/S	3243	SPK110019	12	VCP			120	172		3	8	2.67		0	0	0.00				
4	3_Moderate	60					7	2280				Y	PERDIDO		8/22/2006	9205	9183	MHM020005	MHM010021	U/S	4512	SPM020014	8	VCP			240	620.2		3	5	1.67		272	528	1.94		Multiple reaches were evaluated with one inspection.		
1	3_Moderate	61				26		5				x	9352 Imperial		3/19/2004	12070	12071	MHM140008	MHL140016	DS	2509	SPM140032	8	VCP	3		245	248		27	1.42			166	1.19				Reline, Cut roots
4	3_Moderate	61					6	2264				Y	GUINIDA		8/11/2006	9200	9139	MHM010032	MHM010037	U/S	3638	SPM010023	8	VCP			249	494.6		17	34	2.00		141	288	2.04	1		2	
1	3_Moderate	62	2017-05-30	X		14		20	14		21	x	10232 Dakota		3/2/2004	11312	11314	MHN140029	MHN140031	DS	2910	SPN140018	6	VCP	2		365	370		27	3.00	77		54	3.00		3 1	2	Camera roller, JOS	Cut out section of 6" VCP sewer main to remove camera that was stuck.		Replace pipe
2	3_Moderate	62					G034	3				Y	ROBERT LN		9/2/2005	12824	12825	MHQ090015	MHQ090016	D/S	6421	SPQ090051	8	VCP			295	295.9		24	46		78 30 5.00 1 10.00		1	10	2	113	227			OBZ=OBJ (OBSTACLE IN JOINT), SAG		
4	3_Moderate	62					6	2264				Y	GUINIDA		8/11/2006	9201	9200	MHM010032	MHM010037	U/S	4503	SPM010020	8	VCP			110	494.6		17	34	2.00		141	288	2.04	1		2	
1	3_Moderate	63		X		27		19				x	9213 Garden Grove Blvd.		3/23/2004	8477	9383	MHL130006	MHL130007	DS	3137	SPL130005	8	VCP	3		170	168		27	2.08			0	0.00				Reline, Clear deposit
2	3_Moderate	63					G029	11				Y	HASTER ST		8/26/2005	13007	13008	MHS080005	MHS080006	D/S	6096	SPS080003	10	VCP			330	330.8		17	45		1 18 5.00	1	10.00		5	25	46				
4	3_Moderate	63					6	2264				Y	GUINIDA		8/11/2006	9195	9201	MHM010032	MHM010037	U/S	4504	SPM010021	8	VCP			138	494.6		17	34	2.00		141	288	2.04	1		2	
1	3_Moderate	64			X		3	14				x	12252 Halelani St.		2/6/2004	11216	11217	MNW13029	MNW13030	DS	2393	SPO100021	8	VCP	3		265	279		26	2.89			27	0.52				Reline
2	3_Moderate	64					G023	1					NORMA LN		8/17/2005	12227	12228	MHQ070015	MHQ070016	D/S	6440	SPQ070010	8	VCP			285	287.6		15	45		3		1	5.00		4	9					
3	3_Moderate	64			PPT		51	29					LOMAY ALLEY		12/26/2007	7003	7600	MHK160032	MHK160001	D/S	335	SPK160026	8	VCP			260	255		2	6	3.00		0	0	0.00				
4	3_Moderate	64					11	2351				Y	CRESTWOOD		10/5/2006	8962	8961	MHL040005	MHM040006	U/S	3672	SPM040029	8	VCP			285	577.6		1	2	2.00		138	270	1.96		Multiple reaches were evaluated with one inspection.		
1	3_Moderate	65		X		43		17				x	9052 Stanford Ave.		4/22/2004	8486	8487	MHL120022	MHL120023	DS	3147	SPL120021	8	VCP	3		345	344		25	3.13			39	0.54				Reline, Cut roots
2	3_Moderate	65					R059	6				Y	EASEMENT		11/21/2005	12323	11826	MHP140023	MHP140024	D/S	4439	SPP140047	8	VCP			180	168.7		21	45			4	6					
4	3_Moderate	65					11	2351				Y	CRESTWOOD		10/5/2006	8963	8962	MHL040005	MHM040006	U/S	3673	SPM040030	8	VCP			285	577.6		1	2	2.00		138	270	1.96		Multiple reaches were evaluated with one inspection.		
1	3_Moderate	66		X		37		24				x	8372 Central Ave.		4/12/2004	7679	7684	MHK140035	MHK140036	DS	763	SPK140033	8	VCP	3		330	330		25	2.27			55	1.13	2			Replace pipe
2	3_Moderate	66					R063	7				Y	PALOMA AV		12/1/2005	11463	11464	MHQ140003	MHQ140004	D/S	3822	SPQ140007	8	VCP			290	299.1		22	44			44	89					
3	3_Moderate	66			PPT		49	33					GILBERT		11/8/2007	13905	13904	MHL080001	MHL080002	D/S	7495	SPL080001	10	VCP			212	161		1	3	3.00		0	0	0.00	1		1		MSA = JOM		
4	3_Moderate	66					10	2330				Y	CHAMBERLAIN		9/26/2006	9231	9230	MHM030005	MHM030013	U/S	3600	SPM030016	8	VCP			145	486.3		8	18	2.25	62 29				1	97	188	1.94		Multiple reaches were evaluated with one inspection.		
2	3_Moderate	67					M011	8					GAIL LN		8/25/2005	12217	12224	MHQ080016	MHQ080028	D/S	6430	SPQ080015	8	VCP			310	316.1		20	44		97					97	194					
3	3_Moderate	67			PPT		49	45					SKYLARK		10/22/2007	10130	10131	MHL080009	MHL080010	D/S	5183	SPL080009	8	VCP			375	372		5	13	2.60		0	0	0.00				
4	3_Moderate	67					10	2330				Y	CHAMBERLAIN		9/26/2006	9227	9231	MHM030005	MHM030013	U/S	3601	SPM030017	8	VCP			335	486.3		8	18	2.25	62 29				1	97	188	1.94		Multiple reaches were evaluated with one inspection.		
1	3_Moderate	68		X		34		9				x	12871 Lorna St.		4/2/2004	8413	8414	MHK120018	MHK120039	DS	3391	SPK120024	8	VCP	3		130	326		25	2.08			27	0.17				Reline, Cut roots
2	3_Moderate	68					M002	8					BOWLES AV		8/5/2005	0	0	MHK060040	MHL060040	D/S	4229	SPK060002	8	VCP			195	195.4		17	43			0	0					
3	3_Moderate	68			PPT		20	25					CORVETTE		6/26/2007	9039	9040	MHL100008	MHL100009	D/S	3506	SPL100020	8	VCP			221	225		1	2	2.00		0	0	0.00				
4	3_Moderate	68					7	2277				Y	PALAIS		8/21/2006	9267	9140	MHM020046	MHM020044	U/S	3639	SPM020029	8	VCP			99	453.4		2	6	3.00	141 60		36		1	2	240	513	2.14		Multiple reaches were evaluated with one inspection.		
1	3_Moderate	69				46		7				x	12552 Edieth Dr.		5/6/2004	9483	9482	MHM110007	MHM110006	US	3570	SPM110010	8	VCP	3		300	302		24	2.67			138	3.00				Replace pipe
2	3_Moderate	69					R011	13					DELLA LN		8/12/2005	12973	12956	MHP080008	MHP090025	D/S	6256	SPP080033	8	VCP			305	303.1		15	43			1	2		1			
4	3_Moderate	69					7	2277				Y	PALAIS		8/21/2006	9202	9267	MHM020046	MHM020044	U/S	4506	SPM020008	8	VCP			345	453.4		2	6	3.00	141 60		36		1	2	240	513	2.14		Multiple reaches were evaluated with one inspection.		
1	3_Moderate	70		X		27		16				x	9340 Nicholas Dr.		3/23/2004	8474	8475	MHL130003	MHL130004	DS	3134	SPL130002	8	VCP	3		212	212		23	2.88			0	0.00				Reline, Clear deposit
2	3_Moderate	70					R034	4				Y	SUNGROVE ST		9/26/2005	12738	12739	MHS090026	MHS090027	D/S	6550	SPS090013	8	VCP			301	298.5		16	42		16 5.00 1 20.00					62	83					
4	3_Moderate	70					12	2366				Y	KATELLA		10/20/2006	9015	9014	MHL050052	MHL050051	U/S	4066	SPL050019	12	VCP			370	382.7		9	20	2.22	75		70				145	360	2.48		3		9	Atlas indicates 15-inch pipe.		
1	3_Moderate	71					7					x	12912 Shackelford Ln.		3/22/2004	9382	9383	MHL120018	MHL130007	DS	3138	SPL120018	8	VCP	3		295	289		23	2.09			3	0.05				Reline
2	3_Moderate	71					G012	12					MACKAY ST		7/27/2005	8056	8006	MHK080031	MHK080030	U/S	2410	SPK080053	8	VCP			293	203.2		15	42		2			1	3	5					
4	3_Moderate	71					17	2478				Y	GILBERT		1/18/2007	9280	9279	MHL990003	MHL990002	U/S	3680	SPL990003	8	VCP			372	373.9		8	15	1.88	100				2	102	202	1.98			0			
1	3_Moderate	72		X		17		5				x	9770 Halekulani Dr.		3/5/2004	10750	11551	MHM110035	MHM110039	DS	2668	SPM110024	8	VCP	3		250	259		22	3.14			56	1.74				Reline, Cut roots
2	3_Moderate	72	2016-02-17				G052	3					SANDRA PL		11/16/2005	11899	11900	MHP130034	MHP140004	D/S	4966	SPP130025	12	VCP			650	653.7		16	41			17	31			Removed saddle and cleared roots from saddle and 4" lateral and re-installed saddle and lateral with new 1/8th bend.		
3	3_Moderate	72			PPT		22	15					MARLENE		7/3/2007	9051	9052	MHL100020	MHL100021	D/S	3518	SPL100032	8	VCP			50	45		1	2	2.00		0	0	0.00				
4	3_Moderate	72					1	1896				Y	ROSEBAY		4/1/2006	9159	9158	MHM990021	MHM990020	U/S	4376	SPM990004	8	VCP			335	330.8		8	15	1.88	83 47				1	138	268	1.94			0			
1	3_Moderate	73	2019-12-18			46		19				x	12512 Pleasant Pl.		5/7/2004	9487	9488	MHM110014	MHM110015	DS	3573	SPM110015	8	VCP	3		398	397		22	2.44			4	0.25			Replaced 2 8" x 4" VCP wyes and 8' of 8" VCP main.		Replace pipe
2	3_Moderate	73					R003	9				Y	MAGNOLIA ST		7/27/2005	10799	10800	MHL080027	MHL080028	D/S	4342	SPL080027	8	VCP			255	250.1		16	41		4			7		12	16					

Appendix D-3

| Phase | Priority | Ranking | Repair Completion Date | 2018_Project | Contractor | Tape No. | DVD No. | Inspection No. | Reversal Tape No. | Reversal DVD No. | Reversal Inspec. No. | DVD Watched? (Y) | Location | Street Name | CCTV Date | Existing MH ID Start | Existing MH ID End | Previous MH ID Start | Previous MH ID End | Direction of Camera | Existing Sewer ID | Previous Sewer ID | Size (in) | Material | Joint Length (ft) | GIS Comment | Length (ft) | CCTV Length (ft) | Crack C | Fracture F | Broken B | Hole H | Joint J | Deformed D | Collapsed Pipe X | Surface Damage S | Lining Failure LF | Point Repair RP | Sags WL | PACP Quick Struct Rating | Total Structural Defects | Total Structural Defect Score | Structural Defect Index | Deposits D | Roots (R) | Fine (F) | Tap (T) | Medium (M) | Ball (B) | Infiltration I | Obstacles OB | Vermin V | PACP Quick Maint Rating | Total O&M Defects | Total O&M Defect Score | O&M Defect Index | Tap (Lateral) T | Line L | Intruding Seal Material IS | Miscellaneous M | Total Construction Features | Reasons for Survey Aborted | GIS Identified Abandoned | Repair Description | Comments | Recommendations |
|---|---|---

Appendix D-3

Phase	Priority	Ranking	Repair Completion Date	2018_Project	General: Contractor	Tape No.	DVD No.	Inspection No.	Reversal Tape No.	Reversal DVD No.	Reversal Inspec. No.	DVD Watched? (Y)	Location: Street Name	CCTV Date	Existing MH ID: Start	Existing MH ID: End	Previous MH ID: Start	Previous MH ID: End	Direction of Camera	Pipe: Existing Sewer ID	Pipe: Previous Sewer ID	Pipe: Size (in)	Pipe: Material	Pipe: Joint Length (ft)	Pipe: GIS Comment	Length (ft)	CCTV Length (ft)
4	3_Moderate	98					2	2000				Y	PARADE	4/18/2006	9296	9291	MHM990027	MHM990022	D/S	3452	SPM990030	8	VCP			300	296.6
1	3_Moderate	99				9		5				x	12635 Main St.	2/19/2004			MHO110004	MHO110003-A	U/S		SPO110003-A	8	VCP	3		112	112
2	3_Moderate	99					G004	1				Y	EASEMENT	7/15/2005	8033	8034	MHK060002	MHK060003	D/S	1886	SPK060026	8	VCP			285	295.6
3	3_Moderate	99	2017-03-15		PPT		36	39					VONS	8/28/2007	10104	10105	MHM060039	MHM060040	D/S	4700	SPM060040	8	VCP			325	334
4	3_Moderate	99					P-COUNTY 3C	9				Y	GILBERT	10/12/2007	8942	9343	MHL030040	MHL030037	U/S	4060	SPL030007	10	VCP			300	328.3
1	3_Moderate	100				12		13				x	13421 Adland St.	2/27/2004	11205	11204	MHO140016	MHO140015	U/S	2529	SPO140053	8	VCP	3		305	306
2	3_Moderate	100					R022	1				Y	ZETA ST	9/6/2005	12605	12606	MHQ100028	MHQ100027	D/S	5582	SPQ100002	8	VCP			320	321.5
3	3_Moderate	100	2017-01-24		PPT		38	3					FLAMINGO ALLEY	8/29/2007	10268	10269	MHM070001	MHM080007	D/S	4551	SPM080007	8	VCP			310	321
4	3_Moderate	100					13	2369				Y	KATELLA	10/20/2006	9631	9632	MHL050054	MHL050056	D/S	4071	SPL050029	12	VCP			236	430.3
1	3_Moderate	101		X		5		9				x	12362 Mc Leod St.	2/9/2004	11209	11210	MHO100018	MHO100019	DS	2386	SPO100019	8	VCP	3		273	274
2	3_Moderate	101					G032	10					NIETA DR	8/31/2005	13061	13062	MHQ090040	MHQ090041	D/S	6267	SPQ090036	8	VCP			15	354.3
3	3_Moderate	101			PPT		38	9					FLAMINGO	8/30/2007	10275	10276	MHM070002	MHM080013	D/S	4648	SPM080015	8	VCP			540	540
4	3_Moderate	101					13	2369				Y	KATELLA	10/20/2006	9632	9633	MHL050054	MHL050056	D/S	4072	SPL050030	12	VCP			185	430.3
1	3_Moderate	102				26		2					13311 Ontario Dr.	3/19/2004	12081	12082	MHM140017	MHM140018	DS	2518	SPM140041	8	VCP			320	322
2	3_Moderate	102					G026	7					DEBBIE LN	8/22/2005	13083	13082	MHR080014	MHR080013	U/S	5710	SPR080022	8	VCP			109	108.8
3	3_Moderate	102			PPT		38	1				Y	FLAMINGO ALLEY	8/29/2007	9624	9625	MHM070006	MHM070007	D/S	5044	SPM070010	8	VCP			304	306
4	3_Moderate	102					1	1936				Y	STONYBROOK	4/11/2006	9291	9159	MHM990022	MHM990021	U/S	5028	SPM990033	8	VCP			280	294.0
2	3_Moderate	103					G018	16				Y	ADAH ST	8/4/2005	7975	7976	MHK050038	MHK050039	D/S	1831	SPK050018	8	VCP			360	362.3
3	3_Moderate	103	2017-08-09		PPT		38	2					FLAMINGO ALLEY	8/29/2007	9625	10268	MHM070007	MHM070001	D/S	3697	SPM070037	8	VCP			295	299
4	3_Moderate	103					17	2486				Y	GILBERT	1/25/2007	9285	9286	MHL000003	MHL000004	D/S	3437	SPL000003	8	VCP			290	302.7
1	3_Moderate	104		X		42		13				x	8803 Garden Grove Blvd.	4/19/2004	8401	8402	MHK130003	MHK130004	DS	3377	SPK130006	8	VCP	3		347	347
2	3_Moderate	104					G028	9					CHAPMAN AV	8/25/2005	12920	12921	MHP090020	MHP090021	D/S	6259	SPP090022	12	VCP			155	152.1
3	3_Moderate	104	2017-06-20		PPT		38	8					FLAMINGO	8/30/2007	9626	10275	MHM070008	MHM070002	D/S	5045	SPM070011	8	VCP			255	265
4	3_Moderate	104					13	2368				Y	KATELLA	10/20/2006	9631	8333	MHL050054	MHL050053	U/S	4075	SPL050035	12	VCP			415	431.7
2	3_Moderate	105					M018	14				Y	COLLEGE AV	9/12/2005	12516	12519	MHQ110031	MHQ110034	D/S	4137	SPQ110013	8	VCP			410	401.5
3	3_Moderate	105	2017-08-16		PPT		37	35					SHANNON	8/30/2007	10086	10087	MHM070049	MHM070050	D/S	4682	SPM070056	8	VCP			295	297
4	3_Moderate	105					2	2057				Y	ROSEBAY	5/1/2006	9156	9155	MHM990019	MHM980002	U/S	4373	SPM990001	8	VCP			293	502.3
2	3_Moderate	106					G031	1					JACALENE LN	8/30/2005	12828	12829	MHQ090021	MHQ090022	D/S	6455	SPQ090054	8	VCP			225	235.7
3	3_Moderate	106	2017-08-29		PPT		39	16					SHANNON	9/6/2007	10088	10087	MHM080014	MHM070051	U/S	4683	SPM070057	8	VCP			295	298
4	3_Moderate	106					2	2057				Y	ROSEBAY	5/1/2006	9157	9156	MHM990019	MHM980002	U/S	4374	SPM990002	8	VCP			214	502.3
1	3_Moderate	107		X		4		8				x	12422 Lee Ln.	2/6/2004	11860	11029	MNE14021	MNE13010	DS	3796	SPP100023	8	VCP	3		265	266
2	3_Moderate	107					G046	8				Y	WILLOWOOD AV	10/10/2005	12720	12721	MHS100034	MHS100035	DS	6498	SPS100016	8	VCP			285	288.6
3	3_Moderate	107			PPT		37	38					ORANGEWOOD	8/30/2007	10098	10099	MHM070069	MHM070070	D/S	4693	SPM070060	8	VCP			315	332
4	3_Moderate	107					1	1800				Y	GREENWICH	3/29/2006	9166	9172	MHM990007	MHM990013	U/S	4388	SPM990016	8	VCP			312	308.5
1	3_Moderate	108		X				18					8841 Woolley Ln.	4/1/2004	8388	8389	MHK120003	MHK120004	DS	3362	SPK120006	8	VCP			271	269
2	3_Moderate	108				32	M004	4				Y	HOMEWAY DR	8/8/2005	10835	10827	MHL060017	MHL070034	D/S	5227	SPL060032	8	VCP			205	204.0
3	3_Moderate	108			PPT		37	39					ORANGEWOOD	8/30/2007	10099	10075	MHM070070	MHL070045	D/S	4694	SPM070061	8	VCP			345	332
4	3_Moderate	108					10	2328				Y	HARLE	9/26/2006	8952	8953	MHM030028	MHM030037	D/S	3664	SPM030040	8	VCP			350	694.4
1	3_Moderate	109		X		31		4					13211 Hazel St.	3/30/2004	11568	11569	MHL130040	MHL140005	DS	3105	SPL140029	8	VCP			342	340
2	3_Moderate	109					G017	3					LA GRAND AV	8/3/2005	0	0	MHK050010	MHK050011	D/S	5939	SPK050041	8	VCP			300	300.8
3	3_Moderate	109	2017-09-06		PPT		38	11					CANARY	8/30/2007	9606	9607	MHM080014	MHM080015	D/S	4651	SPM080017	8	VCP			250	270
4	3_Moderate	109					10	2328				Y	HARLE	9/26/2006	8953	8942	MHM030028	MHM030037	D/S	3665	SPL030006	8	VCP			340	694.4
1	3_Moderate	110		X		29		27				x	8782 Dakota Ave.	3/29/2004	11578	11609	MHK140006	MHK140007	DS	2800	SPK140023	8	VCP	3		267	270
2	3_Moderate	110					G038	2				Y	KATHY LN	9/12/2005	11718	11719	MHQ110009	MHQ110010	D/S	6289	SPQ110043	8	VCP			305	301.3
3	3_Moderate	110	2017-09-07		PPT		38	13					HUMMINGBIRD	8/30/2007	9607	9608	MHM080015	MHM080016	D/S	4652	SPM080018	8	VCP			210	208
4	3_Moderate	110					3	2200				Y	STONYBROOK	6/16/2006	9292	9293	MHM990023	MHL990005	D/S	3442	SPM990022	8	VCP			290	568.6
1	3_Moderate	111				1		3				x	12082 Shady Acre St.	2/3/2004	11151	11152	MNW24026	MNW24027	DS	2570	SPO090033	8	VCP	3		310	316
2	3_Moderate	111					R009	1				Y	MURLINE DR	8/9/2005	10115	10116	MHL050019	MHL050020	D/S	4704	SPL050039	8	VCP			292	292.7
3	3_Moderate	111	2017-09-19		PPT		51	41					BLUEJAY	12/27/2007	9614	9610	MHM080020	MHM080018	U/S	4655	SPM080021	8	VCP			235	251
4	3_Moderate	111					3	2200				Y	STONYBROOK	6/16/2006	9162	9157	MHM990023	MHL990005	D/S	4378	SPM990006	8	VCP			190	568.6
1	3_Moderate	112				3		21				x	10552 Mahalo Wy.	2/6/2004	11224	11225	MNW13037	MNW13038	DS	2559	SPO100026	8	VCP	3		265	263
2	3_Moderate	112					R051	4					HARBOR BLVD	11/2/2005	12743	12744	MHS110001	MHS100001	D/S	5652	SPS110012	8	VCP			334	330.0
3	3_Moderate	112			PPT		35	2					CHAPMAN SHOP CENTER	8/16/2007	9621	9622	MHM080035	MHM080036	D/S	5040	SPM080031	8	VCP			375	51
4	3_Moderate	112					MIXED P COUNTY 2	6				Y	RUSTIC	11/3/2007	9637	14601	MHL040023	MHL050055	D/S	8361	SPL040023	8	VCP			219	204.0
1	3_Moderate	113				43		5					8504 Garden Grove Blvd.	4/21/2004	7670	7716	MHK130034	MHJ130001	DS	827	SPJ130019	8	VCP			331	331
2	3_Moderate	113					R029	8					9TH ST	9/20/2005	12528	12529	MHP110025	MHP110026	D/S	6052	SPP110003	8	VCP			310	318.8
3	3_Moderate	113			PPT		51	37					CHAPMAN	12/27/2007	10049	10048	MHM090021	MHM090020	U/S	4189	SPM090022	8	VCP			160	157
4	3_Moderate	113					MIXED P COUNTY 2	6				Y	RUSTIC	11/3/2007	14601	9632	MHL040023	MHL050055	D/S	8363	SPL040023	8	VCP			45	204.0
2	3_Moderate	114					G024	9					9TH ST	8/18/2005	12995	12996	MHP070025	MHP070026	D/S	6318	SPP070004	8	VCP			125	134.1
3	3_Moderate	114	2017-11-01		GGSD		24	785				Y	MALLARD	10/5/2004	10537	10536	MHM150010	MHM150008	U/S	2027	SPM150005	8	VCP			330	324
4	3_Moderate	114					9	2314				Y	CHANTICLEER	9/19/2006	9205	9206	MHM020005	MHM020008	D/S	4510	SPM020012	8	VCP			140	598.3
1	3_Moderate	115		X		13		12				x	10791 Acacia Pkwy.	3/1/2004	11837	11838	MHO120010	MHO120011	DS	5399	SPO120009	6	VCP	2		140	145
2	3_Moderate	115					R064	2				Y	EASEMENT	12/5/2005	6695	14605	MHS130019	MHS130020	D/S	8375	SPS130005	8	VCP			313	314.9
3	3_Moderate	115	2018-01-11		GGSD		24	808					WOODBURY	10/14/2004	10546	10582	MHM150021	MHM150020	U/S	2454	SPM150023	8	VCP/PVC			318	315
4	3_Moderate	115					9	2314				Y	CHANTICLEER	9/19/2006	9206	9207	MHM020005	MHM020008	D/S	4511	SPM020013	8	VCP			150	598.3
1	3_Moderate	116		X		25		7					9211 Stanford Ave.	3/18/2004	9385	8485	MHL120020	MHL120021	DS	3145	SPL120019	8	VCP			316	317
2	3_Moderate	116					M010	2				Y	MORGAN LN	8/22/2005	13135	13136	MHQ080037	MHQ080038	D/S	5846	SPQ080046	8	VCP			330	330.4
3	3_Moderate	116			GGSD		24	824					BLAKE	10/19/2004	10549	10583	MHM160008	MHM160007	U/S	2455	SPM160019	8	PVC/VCP			319	316
4	3_Moderate	116					9	2314				Y	CHANTICLEER	9/19/2006	9207	9344	MHM020005	MHM020008	D/S	5034	SPM020045	8	VCP			295	598.3
2	3_Moderate	117					G034	8				Y	FREDRICK DR	9/2/2005	12825	12826	MHQ090016	MHQ090017	D/S	6453	SPQ090052	8	VCP			385	385.6
3	3_Moderate	117			GGSD		25	841					ERIN	10/26/2004	10549	10552	MHM160008	MHM160012	D/S	2196	SPM160004	8	VCP/PVC			280	280
4	3_Moderate	117					3	2145	3	2193	Y	HILLVIEW	5/4/2006	9302	9301	MHM990033	MHM990032	U/S	3451	SPM990029	8	VCP			184	184.0
1	3_Moderate	118		X		16		5				x	13341 Westlake St.	3/3/2004	11107	11109	MHO140036	MHO140038	DS	2358	SPO140023	8	VCP	3		395	393
2	3_Moderate	118					R003	8					MAGNOLIA ST	7/27/2005	10817	10799	MHL070010	MHL080027	D/S	4832	SPL080038	8	VCP			375	368.7

Phase	Priority	Structural Defect Coding: Crack C (L C M S H)	Crack F (L C M S H)	Broken B	Hole H	Joint O (S M L)	Joint S (S M L)	Joint J (S M L)	Joint A	Deformed D	Collapsed Pipe X (V H P)	Surface Damage S	Lining Failure LF	Point Repair RP	Sags WL	PACP Quick Struct Rating	Total Structural Defects	Total Structural Defect Score	Structural Defect Index
4	3_Moderate	2 4															6	16	2.67
1	3_Moderate		1 1 2															15	3.00
2	3_Moderate	1 1 1				1									13		17	35	
3	3_Moderate		1														1	2	2.00
4	3_Moderate	4 2															6	10	1.67
1	3_Moderate	1 2	1 1															15	2.14
2	3_Moderate	1 2	1												13		16	34	
3	3_Moderate		1 2														3	11	3.67
4	3_Moderate	5 1 1															7	14	2.00
1	3_Moderate	2 3	2															15	2.50
2	3_Moderate	3 2	10 1														16	33	
3	3_Moderate		2 1														3	8	2.67
4	3_Moderate	5 1 1															7	14	2.00
1	3_Moderate	3 5	1															14	2.33
2	3_Moderate		13			1											16	33	
3	3_Moderate	1 1															2	3	3.00
4	3_Moderate	8 1															9	17	1.89
2	3_Moderate	2 5 4	1 2 1			1											12	24	
3	3_Moderate		1														1	3	3.00
4	3_Moderate	1 2	1 2														6	8	1.33
1	3_Moderate	1 2	1 2														14	1.75	
2	3_Moderate		1 13 1														15	33	
3	3_Moderate		1														1	2	2.00
4	3_Moderate	3 4 6															13	28	2.15
2	3_Moderate	1 1 9	1														12	33	
3	3_Moderate		1														1	2	2.00
4	3_Moderate	8 1 2															11	23	2.09
1	3_Moderate	4	1 1														14	2.80	
2	3_Moderate	4 4	8														16	32	
3	3_Moderate		1														2	3	1.50
4	3_Moderate	1 1															2	3	1.50
1	3_Moderate	2	1														14	2.33	
2	3_Moderate	1 4 3	1 3 2														14	32	
3	3_Moderate		1														1	2	2.00
4	3_Moderate	2 1															3	5	1.67
1	3_Moderate	1 1 3	1															14	2.33
2	3_Moderate	3 9	1														13	32	
3	3_Moderate		1														1	2	2.00
4	3_Moderate	2 1															3	5	1.67
1	3_Moderate	4	1 1														14	2.80	
2	3_Moderate	4 4	8														16	32	
3	3_Moderate		1														2	3	1.50
4	3_Moderate	1 1															2	3	1.50
1	3_Moderate	2	1														14	2.33	
2	3_Moderate	1 4 3	1 3 2														14

Appendix D-3

| Phase | Priority | Ranking | Repair Completion Date | 2018_Project | General: Contractor | Tape No. | DVD No. | Inspection No. | Reversal Tape No. | Reversal DVD No. | Reversal Inspec. No. | DVD Watched? (Y) | Location: Street Name | CCTV Date | Existing MH ID: Start | Existing MH ID: End | Previous MH ID: Start | Previous MH ID: End | Direction of Camera | Pipe: Existing Sewer ID | Pipe: Previous Sewer ID | Pipe: Size (in) | Pipe: Material | Pipe: Joint Length (ft) | GIS Comment | Length (ft) | CCTV Length (ft) | Structural Defect Coding: Crack C | Fracture F | Broken B | Hole H | Joint O | Joint J | Deformed D | Collapsed Pipe X | Surface Damage S | Lining Failure LF | Point Repair RP | Sags WL | PACP Quick Struct Rating | Total Structural Defects | Total Structural Defect Score | Structural Defect Index | Operational and Maintenance: Deposits AGS | Deposits AE B | Deposits AE % | Deposits AE L | Deposits AE % | Deposits Other Z | Deposits Other % | Roots (R) Fine (F) B | Roots (R) Fine (F) L | Roots (R) Fine (F) J | Roots (R) Tap (T) C | Roots (R) Tap (T) B | Roots (R) Tap (T) L | Roots (R) Tap (T) J | Roots (R) Tap (T) C | Roots (R) Medium (M) B | Roots (R) Medium (M) L | Roots (R) Medium (M) J | Roots (R) Medium (M) C | Roots (R) Ball (B) B | Roots (R) Ball (B) L | Roots (R) Ball (B) J | Roots (R) Ball (B) C | Infiltration I G | Infiltration I D | Infiltration I R | Infiltration I W | Obstacles OB C | Obstacles OB Z | Obstacles OB % | Vermin V C | Vermin V R | PACP Quick Maint Rating | Total O&M Defects | Total O&M Defect Score | O&M Defect Index | Construction Features: Tap (Lateral) T FD | T FL | T BI | T BD | Line L D | L U | L R | L LD | L RD | Intruding Seal Material IS SRH | IS SRB | IS SRL | IS Z | Miscellaneous M SA | M CU | M MC | Total Construction Feature | Reasons for Survey Aborted | GIS Identified Abandoned | Repair Description | Comments | Recommendations |
|---|---|---

Appendix D-3

Phase	Priority	Ranking	Repair Completion Date	2018_Project	General: Contractor	Tape No.	DVD No.	Inspection No.	Reversal Tape No.	Reversal DVD No.	Reversal Inspec. No.	DVD Watched? (Y)	Location: Street Name	CCTV Date	Existing MH ID: Start	Existing MH ID: End	Previous MH ID: Start	Previous MH ID: End	Direction of Camera	Pipe: Existing Sewer ID	Pipe: Previous Sewer ID	Pipe: Size (in)	Pipe: Material	Pipe: Joint Length (ft)	Pipe: GIS Comment	Length (ft)	CCTV Length (ft)
5	3_Moderate	139			PPT		MAP 2 July 3	7				Y	MEADE STREET	6/26/2012	9600	9601	MHL100034	MHL100035	D/S	3324	SPL100016	8	VCP			368	371.6
1	3_Moderate	140				17		1				x	9922 Stanford Ave.	3/4/2004	10729	11329	MHM120007	MHM120001	DS	2732	SPM120017	8	VCP	3		385	364
2	3_Moderate	140					R012	12					WAVERLY DR	8/15/2005	12947	12949	MHP080018	MHP080021	D/S	6198	SPP080014	8	VCP			288	289.0
3	3_Moderate	140			PPT		32	20					GERALDINE	8/9/2007	10200	9674	MHN070025	CON070003	U/S	4226	SPN070050	8	VCP			156	151
4	3_Moderate	140					MIXED 2	2462				Y	GARZA	1/9/2006	8335	8334	MHL040013	MHL040011	U/S	4924	SPL040011	8	VCP			307	607.8
5	3_Moderate	140		X	PPT		MAP 2 July-3	14				Y	JOSEPHINE STREET	6/28/2012	8390	8393	MHK120005	MHK120008	D/S	3364	SPK120008	8	Clay Tile			332	330.1
1	3_Moderate	141					G007	11				Y	DALE ST	7/20/2005	8513	8514	MHK070043	MHK070044	D/S	1999	SPK070046	8	VCP			365	368.0
3	3_Moderate	141			PPT		35	7					GARDEN	8/16/2007	10201	10202	MHN070026	MHN070027	D/S	5390	SPN070029	8	VCP			250	262
4	3_Moderate	141					MIXED 2	2462				Y	GARZA	1/9/2006	8336	8335	MHL040013	MHL040011	U/S	5018	SPL040012	8	VCP			307	607.8
5	3_Moderate	141		X	PPT		MAP 2 July 4	2				Y	LOUISE STREET	6/28/2012	8429	8430	MHK120031	MHK120032	D/S	3407	SPK120033	8	Clay Tile			332	321.9
2	3_Moderate	142					M015	1					BECK AV	9/6/2005	12185	12186	MHR100032	MHR100033	D/S	5922	SPR100024	8	VCP			311	313.9
3	3_Moderate	142			PPT		35	6					GARDEN	8/16/2007	10202	10203	MHN070027	MHN070028	D/S	5484	SPN070030	8	VCP			250	247
4	3_Moderate	142					6	2262				Y	HERTHA LN	8/11/2006	9200	9199	MHM010038	MHM010036	U/S	4505	SPM010022	8	VCP			300	318.1
5	3_Moderate	142			PPT		MAP 3-B3-2	25					COMSTOCK ROAD	8/8/2012	11683	12807	MHQ100014	MHQ100015	U/S	6461	SPQ100043	8	VCP			380	380.3
1	3_Moderate	143		X		3		15				x	10541 Halelani St.	2/6/2004	11217	11218	MNW13030	MNW13031	DS	2394	SPO100022	8	VCP	3		265	264
2	3_Moderate	143					R048	14				Y	ROCKINGHORSE RD	11/1/2005	10910	10911	MHQ130031	MHQ130032	D/S	4466	SPQ130031	8	VCP		13	226.6	
3	3_Moderate	143			PPT		35	3					HILL	8/16/2007	10203	10204	MHN070028	MHN070029	D/S	5485	SPN070031	8	VCP			285	287
4	3_Moderate	143					MIXED P COU NTY 2	2				Y	POONA ALLEY	11/3/2007	9270	9271	MHM020037	MHM020038	D/S	4366	SPM020004	8	VCP			230	227.9
1	3_Moderate	144				23		17				x	12872 Hazel Ave.	3/17/2004	8496	8497	MHL120030	MHL120031	DS	3156	SPL120029	8	VCP	3		303	304
2	3_Moderate	144					G040	5				Y	9TH ST	9/14/2005	12539	12540	MHP090001	MHP100035	D/S	6055	SPP100001	10	VCP		13	314.6	
3	3_Moderate	144			PPT		35	4					HILL	8/16/2007	10204	10205	MHN070029	MHN070030	D/S	5486	SPN070032	8	VCP			243	244
4	3_Moderate	144					5	2235				Y	MILENBURG	7/18/2006	9336	9337	MHM010012	MHM010014	DS	3482	SPM010033	8	VCP			260	522.9
5	3_Moderate	144		X	PPT		MAP 3-6	15				Y	ACACIA PARKWAY	7/26/2012	11838	13491	MHO120011	MHO120012	D/S	5400	SPO120010	8	Clay Tile		1	355	513.8
1	3_Moderate	145		X		3		19				x	12271 Moana St.	2/6/2004	11221	11222	MNW13034	MNW13035	DS	2398	SPO100023	8	VCP	3		290	325
2	3_Moderate	145					G031	9				Y	JOHN AV	8/30/2005	12473	12567	MHQ090026	MHQ090029	D/S	4766	SPQ090030	8	VCP		13	288.6	
3	3_Moderate	145	2018-10-31		PPT		49	47					GERALDINE	10/24/2007	10209	10210	MHN070033	MHN070034	D/S	4036	SPN070038	8	VCP			249	245
4	3_Moderate	145					5	2235				Y	MILENBURG	7/18/2006	9335	9336	MHM010012	MHM010014	D/S	3483	SPM010034	8	VCP			240	522.9
5	3_Moderate	145		X	PPT		MAP 3-6	13				Y	MAIN STREET	7/27/2012	11749	11750	MHO120001	MHP120037	D/S	4404	SPO120001	10	Clay Tile			335	332.4
1	3_Moderate	146		X		25		10					12686 Lucille Ave.	3/18/2004	9369	8485	MHL110047	MHL120021	DS	3206	SPL110049	8	VCP			253	242
2	3_Moderate	146					R039	9				Y	ALLEY	9/30/2005	12663	12664	MHT100045	MHT100046	D/S	3924	SPT100041	8	VCP		13	400	400.3
3	3_Moderate	146	2019-01-29		PPT		31	39					McMICHAEL	8/8/2007	10217	10218	MHN070036	MHN070037	D/S	4039	SPN070041	8	VCP			328	330
4	3_Moderate	146					5	2230				Y	GUINIDA	7/17/2006	9330	9331	MHM010005	MHM010006	D/S	3475	SPM010027	8	VCP			328	295.4
5	3_Moderate	146			PPT		MAP 3-B3-5	6				Y	COLLEGE AVENUE	8/31/2012	11649	11650	MHR110013	MHR110014	D/S	6083	SPR110030	8	VCP			325	332.6
1	3_Moderate	147				35		26					13230 Coast St.	4/13/2004	7108	13416	MHJ140005	MHJ140030	DS	6836	SPJ140031	10	VCP			280	281
2	3_Moderate	147					R046	14				Y	PEARCE AV	10/28/2005	12770	12771	MHR140005	MHR140006	D/S	6479	SPR140006	8	VCP		13	310	310.4
3	3_Moderate	148	2019-07-30		PPT		30	9					FAYE	8/1/2007	9851	9853	MHN080005	MHN080007	D/S	4147	SPN080005	8	VCP			300	302
4	3_Moderate	148					2	1963				Y	PARADE	4/18/2006	9295	9294	MHM990026	MHM990025	U/S	3446	SPM990024	8	VCP			287	284.8
5	3_Moderate	148			PPT		MAP 3-B3-2	11				Y	DEANANN PLACE	8/10/2012	11300	11301	MHN140018	MHN140019	D/S	2899	SPN140007	8	VCP			300	300.1
1	3_Moderate	149				20		10					12642 Lucille Ave.	3/10/2004	9367	9368	MHL110045	MHL110046	DS	3204	SPL110047	8	VCP			300	301
2	3_Moderate	149					G016	10					WASCO RD	8/2/2005	8050	7973	MHK050030	MHK050031	D/S	2428	SPK050046	8	VCP			285	300.8
3	3_Moderate	149	2019-06-04		PPT		37	25					SEACREST	8/29/2007	9867	9847	MHN080025	MHN090009	D/S	5881	SPN080025	8	VCP			325	310
4	3_Moderate	149					P COU NTY	5				Y	CAMPUS	10/11/2007	9170	9169	MHM990006	MHM990010	U/S	4385	SPM990013	8	VCP		9	99	419.2
5	3_Moderate	149		X	PPT		MAP 2-1-4	15				Y	FAYE AVE	7/17/2012	11273	11274	MHN090018	MHN090019	D/S	2557	SPN090016	8	VCP			286	292.2
1	3_Moderate	150		X			7A	12					11082 Walnut	2/19/2004	11785	11766	MHP100034	MHP110016	DS	5117	SPP100041	6	VCP			270	268
2	3_Moderate	150					M014	7					TWINTREE AV	9/2/2005	12115	12171	MHR100025	MHR100022	D/S	6033	SPR100034	8	VCP			135	134.4
3	3_Moderate	150			PPT		32	3					EDGEWOOD	8/8/2007	9967	9966	MHN080030	MHN080029	U/S	5371	SPN080030	8	VCP			290	291
4	3_Moderate	150					P COU NTY	5				Y	CAMPUS	10/11/2007	9165	9170	MHM990006	MHM990010	U/S	4386	SPM990014	8	VCP		9	323	419.2
5	3_Moderate	150		X	PPT		MAP 3-5	12				Y	MCLEOD STREET	7/24/2012	11210	11147	MHO100019	MHO110030	D/S	2387	SPO100020	8	Clay Tile			270	267.1
1	3_Moderate	151				19		9				x	12041 Melody Dr.	3/8/2004	8448	8449	MHM120029	MHM120030	DS	3108	SPM120030	8	VCP	3		180	181
2	3_Moderate	151					G058	10				Y	HASTER ST	12/13/2005	13009	13004	MHS080007	MHT090039	D/S	6098	SPT080008	10	VCP			305	310.9
3	3_Moderate	151			PPT		32	5					EDGEWOOD	8/8/2007	9970	9971	MHN080034	MHN080035	D/S	5375	SPN080034	8	VCP			345	353
4	3_Moderate	151					17	2479				Y	GILBERT	1/18/2007	9281	9282	MHL990004	MHL990005	D/S	3682	SPL990005	8	VCP			255	251.8
5	3_Moderate	151			PPT		MAP 2 July 2	5				Y	BIXBY AVE	6/25/2012	9024	9026	MHL090022	MHL090024	D/S	3337	SPL090020	8	VCP			282	283.9
1	3_Moderate	152				51		2					12401 Jerome St.	5/20/2004	9595	9566	MHL100029	MHL110006	DS	3319	SPL100011	8	VCP			334	327
2	3_Moderate	152					R047	9				Y	ALLEY	10/31/2005	10902	11421	MHQ130022	COQ130002	U/S	3708	SPQ130001	8	VCP			140	136.1
3	3_Moderate	152			PPT		37	26					MELODY PARK	8/30/2007	9978	9979	MHN080042	MHN080043	D/S	5383	SPN080042	8	VCP			210	214
4	3_Moderate	152					1	1722				Y	COLONY	3/15/2006	9168	9167	MHM990009	MHM990008	U/S	4383	SPM990011	8	VCP			98	97.0
1	3_Moderate	153				17		9				x	12681 Lanakila Ln.	3/5/2004	10753	11551	MHM110038	MHM110039	DS	2671	SPM110027	8	VCP	3		192	191
2	3_Moderate	153					R001	7				Y	FERRIS LN	7/25/2005	10141	10793	MHL080019	MHL080021	D/S	5942	SPL080039	8	VCP			305	297.4
3	3_Moderate	153			PPT		45	51					CHAPMAN	10/8/2007	9845	9846	MHN090007	MHN090008	D/S	4178	SPN090010	15	VCP			252	253
4	3_Moderate	153					5	2236				Y	MILENBURG	7/19/2006	9337	9328	MHM010014	MHM010003	D/S	3484	SPM010035	8	VCP			270	266.9
5	3_Moderate	153		X	PPT		MAP 2-2-1	2					LARSON AVENUE	7/5/2012	7673	7676	MHK130037	MHK130040	D/S	710	SPK130038	8	Clay Tile			260	254.3
1	3_Moderate	154		X		37		5					8262 Stanford Ave.	4/8/2004	7712	7713	MHJ120025	MHJ120026	DS	745	SPJ120017	8	VCP			132	141
2	3_Moderate	154					R060	2				Y	HAVENWOOD DR	11/28/2005	11908	11909	MHP140010	MHP140011	D/S	4813	SPP140009	8	VCP		11	291	291.9
3	3_Moderate	154	2019-05-08		PPT		22	34					BONSER	7/5/2007	9422	9447	MHN100015	MHN100025	D/S	3500	SPN100051	8	VCP			350	359
4	3_Moderate	154					MIXED P COU NTY 1	9				Y	GILBERT	11/6/2007	8943	8944	MHL030038	MHL030039	D/S	3656	SPL030004	10	VCP			337	332.0
1	3_Moderate	155		X		40		29					13401 Wilson St.	4/16/2004	7689	7690	MHK140039	MHK150011	DS	720	SPK140036	8	VCP			380	378
2	3_Moderate	155					R015	4					CLIFFWOOD AV	8/22/2005	13046	13097	MHR070021	MHR070022	D/S	6019	SPR070028	8	VCP		11	323	320.4
3	3_Moderate	155			PPT		25	36					TYHURST	7/17/2007	9430	9446	MHN100023	MHN100024	D/S	3501	SPN100052	8	VCP			320	333
4	3_Moderate	155					5	2230				Y	GUINIDA	7/17/2006	9331	9326	MHM010006	MHL010005	D/S	3476	SPL010007	8	VCP			261	247.8
1	3_Moderate	156		X		19		4					9632 Tantalo Ave.	3/8/2004	12029	12046	MHM120019	MHM110044	US	2497	SPM110049	8	VCP			335	344
2	3_Moderate	156	2016-05-18				M003	4					GILL DR	8/8/2005	10169	10170	MHL060014	MHL060015	D/S	3731	SPL060018	8	VCP			282	284.6
3	3_Moderate	156	2019-05-14		PPT		25	37					TYHURST	7/17/2007	9446	9447	MHN100024	MHN100025	D/S	3181	SPN100035	8	VCP			160	151
4	3_Moderate	156					4	2219				Y	HARVEST	7/5/2006	9309	9318	MHM000007	MHM000017	D/S	3469	SPM000011	8	VCP			328	325.0

Structural Defect Coding: Crack: C	Fracture: F	Broken: B	Hole: H	Joint: O	Joint: J	Deformed: D	Collapsed Pipe: X	Surface Damage: S	Lining Failure: L	Point Repair: P	Sags: S	WL	PACP Quick Struct Rating	Total Structural Defects	Total Structural Defect Score	Structural Defect Index
	L C M S H	L C M S H	B SV VV SV VV	S M L S M L A	V H P	S	LF	RP	S	WL					
	8 27 19 1 2	6 7									473C	70	153	2.19
	1 3 1	1										10	2.50	
	1									12		13	27	
		1										1	4	4.00
	6 3											9	15	1.67
	2 4 21	1 1 2 7									473C	38	113	2.97
	2 2 4	4										12	26	
		2 2 1										5	14	2.80
	6 3											9	15	1.67
	2 4 8	2 7									473B	23	64	2.78
	2 3 5	1										11	26	
		1										1	2	2.00
	2 1											3	5	1.67
	1 2 4	7									473A	14	44	3.14
	1 3											10	2.50	
										13		13	26	
		1 3										4	15	3.75
	9 1											10	19	1.90
	2 1	1										10	26	1.67
										13		13	26	
		1 3										4	15	3.75
	4 1											5	9	1.80
	3 24	1 6									463C	37	107	2.89
	2 2											10	2.50	
										13		13	26	
		1										2	3	1.50
	2 2	2 1										7	16	2.29
	13 3	19 5 6									463C	46	126	2.74
	1 3											10	2.50	
		1										13	26	
		2 1										2	3	1.50
	14 3	1 1 3 3									463S	25	71	2.84
	2	1										10	2.50	
	2 5 4	2										13	25	
		2 1										4	9	2.25
	2											4	9	2.25
	2											2	7	3.50
	2									9		11	22	2.00
	23 13 25	3 1 1 2									453D	68	168	2.47
	2											9	3.00	
	3 4	1										12	25	
		1										3	3.00	
	2									9		11	22	2.00
	11 1 15	1 5									453B	33	88	2.67
	1											9	3.00	
	1	2										11	25	
	3 2											5	8	1.60
	4 10 15	2 5 3 2									453B	41	99	2.41
	1	1 1										9	3.00	
	7 2	1										11	25	
		1										1	2	2.00
	3	1 1										9	3.00	
	5	1										10	25	
		1										4	4.00	
	5 1 2										463D	8	17	2.13
	12	5									453A	19	60	3.16
		1 1										9	2.25	
	2	1								11		12	25	
	1											1	2	2.00
	2	1										4	6	1.50
	1 1											9	2.25	
	1											1	3	3.00
	2	1										2	4	2.00
	1 3	1 1										6	12	2.00
	2	1 1										9	12.00	
	4 7 3											14	24	
		1										1	2	2.00
	1 4 2											7	12	1.71

Operational and Maintenance: Deposits: AGS	AE: B	AE: %	AE: L	Other: %	Other: Z	Roots (R): Fine (F): B	Fine (F): L	Fine (F): J	Tap (T): C	Tap (T): B	Medium (M): L	Medium (M): J	Ball (B): C	Ball (B): B	Ball (B): L	Ball (B): J	Infiltration: C	Infiltration: G	Infiltration: D	Infiltration: R	Infiltration: W	Obstacles: I	Other: C	Other: Z	Other: %	Vermin: C	Vermin: R	PACP Quick Maint Rating	Total O&M Defects	Total O&M Defect Score	O&M Defect Index
	24						4	1	31			4		1												2	2C12	26	50	1.92
															1													2	2.00
																												0	0	
																												0	0.00
1	30						4	1	31			4		1												2		73	118	1.62
																											0000	0	0	0.00
	105	12						2	6													1	5					126	246	1.95
	1						34	1				2		1													1100	1	1	1.00
	1																											57	1.27
												2		1														1	3	
												1																0	0	0.00
	6 4							2																		7		19	29	1.53
	8						8		6		1	1																20	0.97	
	76	91	5.00	2	40.00																					1		170	339	
																												0	0	0.00
	130						40		1	3																5		179	389	2.17
1	130						58		23			1	1	2													4233	169	327	1.93
																												82		
	3	50	5.00	1	5.00		7	1		1	1															1		55	109	
																												0	0	0.00
	130						40		1	3																5		179	389	2.17
							20																			27	312C	48	73	1.52
																												8	2.00	
	9	5	5.00	1	5.00		5																					15	30	
																												0	0	0.00
	98	14						3																		12		116	228	1.97
																												0000	0	0	0.00
								1	3																			179	389	2.17
							20																			27	312C	48	73	1.52
							5																					8	2.00	
	9	5	5.00	1	5.00																							15	30	
																												0	0	0.00
	98	14						3																		12		116	228	1.97
																												0000	0	0	0.00
								1	3																			179	389	2.17
							20																			27	312C	48	73	1.52
																												8	2.00	
	9	5	5.00	1	5.00		5																					15	30	
																												0	0	0.00
	98	14						3																		12		116	228	1.97
																												0000	0	0	0.00
	1						3																					21	34	
												1		1														0	0	0.00
							11																					21	34	
																												0	0	0.00
	2																											2	4	
	2																											0	0	0.00
	1						3																					4	8	
	1

Appendix D-3

| Phase | Priority | Ranking | Repair Completion Date | 2018_Project | General | | |

Appendix D-3

| Phase | Priority | Ranking | Repair Completion Date | 2018_Project | Contractor | Tape No. | DVD No. | Inspection No. | Reversal Tape No. | Reversal DVD No. | Reversal Inspec. No. | DVD Watched? (Y) | Location | Street Name | CCTV Date | Existing MH ID Start | Existing MH ID End | Previous MH ID Start | Previous MH ID End | Direction of Camera | Existing Sewer ID | Previous Sewer ID | Size (in) | Material | Joint Length (ft) | GIS Comment | Length (ft) | CCTV Length (ft) | Crack C | Crack L | Crack C | Crack M | Crack S | Crack H | Fracture F | Fracture L | Fracture C | Fracture M | Fracture S | Fracture H | Broken B | Broken SV | Hole H | Hole SV | Hole VV | Joint O | Joint S | Joint M | Joint L | Joint S | Joint M | Joint L | Joint A | Deformed D | Deformed V | Collapsed/ Flat H | Collapsed/ Flat P | Surface Damage S | Lining Failure LF | Point Repair RP | Sags S | Sags WL | PACP Quick Struct Rating | Total Structural Defects | Total Structural Defect Score | Structural Defect Index | Deposits AGS | Deposits AE B | Deposits AE % | Deposits AE L | Deposits AE % | Deposits Other Z | Deposits Other % | Roots (R) Fine (F) B | Roots (R) Fine (F) L | Roots (R) Fine (F) J | Roots (R) Tap (T) C | Roots (R) Tap (T) B | Roots (R) Tap (T) L | Roots (R) Tap (T) J | Roots (R) Medium (M) C | Roots (R) Medium (M) B | Roots (R) Medium (M) L | Roots (R) Medium (M) J | Roots (R) Ball (B) C | Roots (R) Ball (B) B | Roots (R) Ball (B) L | Roots (R) Ball (B) J | Infiltration I | Obstacles OB C | Obstacles OB Z | Obstacles OB Other % | Vermin V C | Vermin V R | PACP Quick Maint Rating | Total O&M Defects | Total O&M Defect Score | O&M Defect Index | Tap (Lateral) T FD | Tap (Lateral) T FL | Tap (Lateral) T BI | Tap (Lateral) T BD | Line L D | Line L L | Line L U | Line L R | Line L LD | Intruding Seal Material IS RD | Intruding Seal Material IS SRH | Intruding Seal Material IS SRB | Intruding Seal Material IS SRL | Miscellaneous M Z | Miscellaneous M SA | Miscellaneous M CU | Miscellaneous M MC | Total Construction Feature | Reasons for Survey Aborted | GIS Identified Abandoned | Repair Description | Comments | Recommendations |
|---|---|---

Phase	Priority	Ranking	Repair Completion Date	2018_Project	General: Contractor	Tape No.	DVD No.	Inspection No.	Reversal Tape No.	Reversal DVD No.	Reversal Inspec. No.	DVD Watched? (Y)	Location: Street Name	CCTV Date	Existing MH ID: Start	Existing MH ID: End	Previous MH ID: Start	Previous MH ID: End	Direction of Camera	Pipe: Existing Sewer ID	Pipe: Previous Sewer ID	Pipe: Size (in)	Pipe: Material	Pipe: Joint Length (ft)	Pipe: GIS Comment	Length (ft)	CCTV Length (ft)
2	3_Moderate	188					G033	1					JOHN AV	9/1/2005	11695	12815	MHO090003	MHQ090006	D/S	6463	SPQ090062	8	VCP			280	282.7
3	3_Moderate	188			PPT		25	19					CHAPMAN	7/16/2007	10621	10622	MHO090013	MHO090015	D/S	4172	SPO090007	15	VCP			331	333
5	3_Moderate	188		X	PPT		MAP 2-1-4	18				Y	FAYE AVE	7/18/2012	11275	11276	MHN090020	MHN090021	D/S	2877	SPN090018	8	VCP			270	281
1	3_Moderate	189		X		20		9					12571 Lucille Ave.	3/10/2004	9366	9367	MHL110044	MHL110045	DS	3203	SPL110046	8	VCP			300	300
2	3_Moderate	189					G032	4					BROOKSHIRE AV	8/31/2005	12571	12572	MHO090035	MHQ090036	D/S	4744	SPQ090017	8	VCP			365	360.9
3	3_Moderate	189			PPT		25	21					CHAPMAN	7/16/2007	9924	10668	MHO090016	MHO090017	D/S	4275	SPO090040	15	VCP			269	265
1	3_Moderate	190				49		15					9542 Charlene Cir.	5/17/2004	9539	9540	MHM100034	MHL100004	DS	3273	SPM100037	8	VCP			250	256
2	3_Moderate	190					M014	2		M014	3		THACKERY DR	9/2/2005	12170	12171	MHR100021	MHR100022	D/S	5911	SPR100010	8	VCP			381	392.1
3	3_Moderate	190			PPT		22	19					DIANE	7/3/2007	12345	12344	MHO090028	MHO090027	U/S	5428	SPO090014	8	VCP			340	369
5	3_Moderate	190			PPT		MAP 3-B2-4	1				Y	HASTER STREET	8/27/2012	13006	13007	MHS080004	MHS080005	D/S	6095	SPS080002	10	VCP			330	332.1
1	3_Moderate	191		X		20		6					12572 Barbara Ave.	3/9/2004	9362	9363	MHL110040	MHL110041	DS	3167	SPL110042	8	VCP			310	301
2	3_Moderate	191					R012	13				Y	WAVERLY DR	8/15/2005	12949	12951	MHP080021	MHP080023	D/S	6200	SPP080016	8	VCP			390	387.7
3	3_Moderate	191			PPT		27	19					LAMPSON	7/23/2007	12330	12331	MHO110026	MHO110027	D/S	4935	SPO110017	8	VCP			340	332
5	3_Moderate	191			PPT		MAP 2-2-2	23					PENTAGON STREET	7/16/2012	9091	9097	MHK100014	MHK110034	D/S	3238	SPK100014	10	Clay Tile			220	217.5
1	3_Moderate	192		X		42		9					8801 Anthony Ave.	4/19/2004	8398	8399	MHK120015	MHK120016	DS	3372	SPK120016	8	VCP			350	348
2	3_Moderate	192					M011	10				Y	GAIL LN	8/25/2005	12225	12991	MHQ080029	MHQ080052	D/S	6438	SPQ080023	8	VCP			245	234.6
3	3_Moderate	192			PPT		27	9					NELSON	7/19/2007	12331	12350	MHO110027	MHO110029	D/S	4936	SPO110018	8	VCP			50	25
1	3_Moderate	193				17		4					12652 Pleasant Pl.	3/5/2004	10750	10749	MHM110035	COM110034	US	2667	SPM110023	8	VCP			115	102
2	3_Moderate	193					M007	1				Y	JACALENE LN	8/12/2005	13199	14345	MHQ060007	ANAHEIM 1	D/S	5976	SPQ060009	8	VCP			295	208.1
3	3_Moderate	193			PPT		11	37					TAFT	5/17/2007	12285	12283	MHO130017	MHO130015	U/S	3935	SPO130014	8	VCP			450	462
5	3_Moderate	193			PPT		MAP 2-1-2	14				Y	GALWAY STREET	7/11/2012	11547	11548	MHM120013	MHM120014	D/S	2656	SPM120013	8	VCP			351	328.8
1	3_Moderate	194				27		14					9401 Nicholas Dr.	3/22/2004	8473	8458	MHL130002	MHL130001	US	3142	SPL130019	8	VCP			365	363
2	3_Moderate	194					R009	4				Y	DEWEY DR	8/9/2005	10118	10119	MHL050022	MHL050023	D/S	5177	SPL050042	8	VCP			316	317.1
3	3_Moderate	194			PPT		11	40					TAFT	5/17/2007	12282	12292	MHO140001	MHO140017	D/S	3934	SPO140002	8	VCP			275	269
5	3_Moderate	194		X	PPT		MAP 2-2-2	20				Y	JACKSON STREET	7/17/2012	7072	7073	MHJ140018	MHJ140019	D/S	811	SPJ140020	8	Clay Tile			340	318.8
1	3_Moderate	195				7A		21	7A		22		Alley	2/19/2004			MHP120023A	MHP130010	DS		SPP120027A-	6	VCP			143	143
2	3_Moderate	195					G010	15					ABERDEEN LN	7/25/2005	10294	10296	MHK070011	MHK070013	D/S	3879	SPK070011	8	VCP			165	170.3
3	3_Moderate	195			PPT		11	14					TAFT	5/15/2007	10977	10976	MHO150020	MHO150019	U/S	6002	SPO150007	8	VCP			80	61
5	3_Moderate	195			PPT		MAP 3-B3-3	24				Y	NUTWOOD STREET	8/22/2012	11231	11137	MHN100009	MHN110034	D/S	2566	SPN100009	8	VCP			265	266.7
1	3_Moderate	196		X		37		1				x	12691 Jackson St.	4/8/2004	7711	7712	MHJ110012	MHJ120025	DS	744	SPJ110008	8	VCP	3		272	269
2	3_Moderate	196					G038	8				Y	DORADA AV	9/12/2005	11725	11729	MHQ110016	MHQ110020	D/S	6296	SPQ110050	8	VCP			330	331.7
3	3_Moderate	196			PPT		8	32					TEAL	4/30/2007	10405	10406	MHO150028	MHO150029	D/S	2137	SPO150013	8	VCP			310	309
5	3_Moderate	196			PPT		MAP 2-1-1	6					LAMPSON AVE	7/6/2012	13626	9036	MHK110037	MHL110034	D/S	7147	SPK110024	12	VCP			290	240.3
1	3_Moderate	197				23		3				x	9802 Belfast Dr.	3/15/2004	10754	10755	MHM130015	MHM130016	DS	2672	SPM130005	8	VCP	3		310	311
2	3_Moderate	197					G041	4				Y	FALLINGLEAF ST	9/23/2005	12735	12734	MHS090024	MHS090023	U/S	6513	SPS090008	8	VCP			145	143.5
3	3_Moderate	197			PPT		9	1					CYPRESS	5/1/2007	10430	10431	MHO150038	MHO150039	D/S	2153	SPO150030	8	VCP			215	219
5	3_Moderate	197			PPT		MAP 3-3-5	8				Y	KENSINGTON LANE	7/25/2012	11258	11259	MHN110006	MHN110007	D/S	2544	SPN110012	8	Clay Tile			430	434.6
1	3_Moderate	198		X		36		28					12691 Wynant Dr.	4/8/2004	7708	7709	MHJ110010	MHJ120024	DS	741	SPJ110006	8	VCP			270	268
2	3_Moderate	198					G052	2				Y	SANDRA PL	11/16/2005	10876	11899	MHP130033	MHP130034	D/S	4965	SPP130024	12	VCP			646	648.6
3	3_Moderate	198			PPT		12	15					BOWEN	5/21/2007	10502	10437	MHO150038	MHO160001	U/S	2261	SPO160047	8	VCP			300	306
5	3_Moderate	198		X	PPT		MAP 3-5	10				Y	LAMPSON AVENUE	7/25/2012	11136	11137	MHO110018	MHN110034	D/S	2373	SPO110025	8	Clay Tile			300	301.5
1	3_Moderate	199				19		5					9632 Stanford Ave.	3/8/2004	12029	12030	MHM120019	MHM120020	DS	2737	SPM120019	8	VCP			100	104
2	3_Moderate	199					G036	12					GLEN ST	9/7/2005	12604	12603	MHQ100023	MHQ110038	D/S	5581	SPQ100001	8	VCP			197	198.6
3	3_Moderate	199			PPT		9	2					CYPRESS	5/1/2007	10431	10432	MHO150039	MHO150040	D/S	2154	SPO150031	8	VCP			220	221
5	3_Moderate	199			PPT		MAP 3-B3-3	6					GLENCOVE STREET	8/27/2012	11478	13181	MHO050035	MHO050036	D/S	4260	SPO050004	8	VCP		ANAHEIM	80	219.5
1	3_Moderate	200		X		25		1				x	12562 Hazel Ave.	3/17/2004	9371	9372	MHL110049	MHL110050	DS	3208	SPL110051	8	VCP	3		300	301
2	3_Moderate	200					G028	11					CHAPMAN AV	8/25/2005	12922	12923	MHP090022	MHP090023	D/S	6261	SPP090024	12	VCP			325	339.3
3	3_Moderate	200			PPT		9	3					CYPRESS	5/1/2007	10432	10502	MHO150040	MHN150038	D/S	2260	SPN150029	8	VCP			200	209
5	3_Moderate	200			PPT		June Map 2 B1	9					PERDIDO STREET	6/4/2012	9219	9220	MHM020029	MHM020030	D/S	3588	SPM020021	8	VCP			265	263.2
1	3_Moderate	201				20		3					12712 Leroy Ave.	3/9/2004	8480	9385	MHL110038	MHL120020	DS	2975	SPL120040	8	VCP			130	147
2	3_Moderate	201					G048	5				Y	CHOISSER RD	10/17/2005	12112	12756	MHS110028	MHS120031	D/S	5773	SPS120049	8	VCP			321	322.2
3	3_Moderate	201			PPT		8	23				Y	WOODBURY ST	4/30/2007	10433	10436	MHO150041	MHO150044	D/S	2155	SPO150032	8	VCP			352	355
1	3_Moderate	202				4		10					11072 Walnut	2/10/2004	11778	11780	MHP100027	MHP100029	DS	4641	SPP100034	6	VCP			275	287
2	3_Moderate	202					G034	13				Y	STRATHMORE DR	9/2/2005	12806	12809	MHQ100013	MHQ100017	D/S	6340	SPQ100030	8	VCP			288	288.1
3	3_Moderate	202			PPT		10	12				Y	BOWEN	5/7/2007	10442	10444	MHO160006	MHO160008	D/S	2164	SPO160031	8	VCP			342	346
5	3_Moderate	202			PPT		MAP 2-2-2	21					TRASK AVENUE	7/23/2012	7643	7644	MHK150005	MHK150006	D/S	999	SPK150004	8	Clay Tile			275	326.5
1	3_Moderate	203				47		25					9712 Alwood Ave.	5/12/2004	9553	9554	MHM090027	MHM090028	DS	3286	SPM090028	8	VCP			225	332
2	3_Moderate	203					R006	16					ROSANNA AV	8/4/2005	10786	10788	MHL060044	MHL060045	DS	4238	SPL060029	8	VCP			285	280.4
3	3_Moderate	203			PPT		10	39					LINNELL AVE	5/14/2007	10983	10984	MHO160025	MHO160026	D/S	6007	SPO160003	8	VCP			15	15
5	3_Moderate	203			PPT		MAP 3-1	10				Y	PATRICIA DR	7/20/2012	10640	10641	MHO080008	MHO080009	D/S	4105	SPO080008	8	VCP			346	351.6
1	3_Moderate	204		X		31		6					13341 Hazel St.	3/30/2004	11570	11571	MHL140006	MHL140007	DS	2946	SPL140031	8	VCP			343	340
2	3_Moderate	204					M014	6					ALLEY	9/2/2005	12114	12115	MHR100019	MHR100020	D/S	5775	SPR100003	8	VCP			305	310.2
3	3_Moderate	204			PPT		9	29					LINNELL	5/4/2007	10413	10465	MHO160040	MHO160041	D/S	2269	SPO160049	8	VCP			300	302
5	3_Moderate	204		X	PPT		MAP 3-5	3					NELSON STREET	7/25/2012	12270	12271	MHO110006	MHO110007	D/S	5409	SPO110007	8	Clay Tile			125	129.6
1	3_Moderate	205		X		41		1					11300 Garden Grove Blvd.	4/16/2004	11018	11022	MHP130002	MHP130003	DS	4441	SPP130004	10	VCP			331	332
2	3_Moderate	205					M009	6					EUDORA LN	8/16/2005	12208	12209	MHQ080002	MHQ080003	D/S	6327	SPQ080007	8	VCP			300	303.0
3	3_Moderate	205			PPT		9	23					RANNEY	5/4/2007	10418	10420	MHO160046	MHO160048	D/S	2147	SPO160018	8	VCP			346	349
5	3_Moderate	205			PPT		MAP 2-2-3	2					TRASK AVENUE	7/17/2012	7691	7060	MHK150012	MHJ150001	D/S	771	SPK150019	8	Clay Tile			240	228.4
1	3_Moderate	206				41		4					12931 17th St.	4/16/2004	11013	11014	MHP120011	MHP130001	DS	5131	SPP120010	6	VCP			332	332
2	3_Moderate	206					G032	9					WEST ST	8/31/2005	12576	12577	MHQ090002	MHQ090003	D/S	4749	SPQ090022	8	VCP			360	210.4
3	3_Moderate	206			PPT		5	9					LAKE	4/11/2007	6946	6947	MHO170016	MHO170017	D/S	239	SPO170024	8	VCP			392	394
5	3_Moderate	206		X	PPT		MAP 3-6	12					MAIN STREET	7/27/2012	11750	11751	MHP120037	MHP120038	D/S	4405	SPP120038	10	Clay Tile			335	329.7
1	3_Moderate	207				2		17					12282 Betty	2/5/2004	11845	11848	MNE14003	MNE14006	DS	5238	SPP100009	8	VCP			263	264
2	3_Moderate	207					G035	2					COMSTOCK RD	9/6/2005	12807	12808	MHQ100015	MHQ100016	D/S	6341	SPQ100031	8	VCP			410	395.3
3	3_Moderate	207			PPT		5	7				Y	MORNINGSIDE	4/10/2007	6884	7238	MHO170025	MHO170026	D/S	25	SPO170010	8	VCP			245	269
5	3_Moderate	207			PPT		MAP 3-B3-1	23					LAMPSON AVENUE	8/2/2012	12586	12587	MHP110021	MHP110022	D/S	5088	SPP110013	6	Clay Tile			130	126.4
1	3_Moderate	208		X		31		8					13212 Lucille St.	3/30/2004	11562	11563	MHL130038	MHL140001	DS	3097	SPL140023	8	VCP			313	313
2	3_Moderate	208					G003	12					YANA ST	7/14/2005	8041	8042	MHK060013	MHK060014	D/S	1894	SPK060034	8	VCP			182	177.6
3	3_Moderate	208			PPT		6	12					16th ST.	4/12/2007	6958	6959	MHO170034	MHO170035	D/S	246	SPO170037	8	VCP			292	295
1	3_Moderate	209				48		13					9592 Bixby Ave.	5/13/2004	9525	9526	MHM100023	MHM100024	DS	3230	SPM100026	8	VCP			280	238
2	3_Moderate	209					R004	16				Y	MACGILL ST	7/28/2005	10311	10313	MHK080016	MHK080018	D/S	5892	SPK080020	8	VCP			292	287.0
3	3_Moderate	209			PPT		7	24					BOWEN	4/25/2007	6961	6962	MHO170037	MHO170038	D/S	249	SPO170040	8	VCP			316	322
5	3_Moderate	209		X	PPT		MAP 3-B3-2	19					IMPERIAL AVENUE	8/8/2012	11186	11191	MHO140003	MHO140048	U/S	2279	SPO140038	8	VCP			145	148.3
1	3_Moderate	210				47		8					9652 Lenore Dr.	5/10/2004	9513	9411	MHM110021	COM110004	DS	3435	SPM110038	8	VCP			130	165
2	3_Moderate	210					G039	7					ORA DR	9/13/2005	12592	12593	MHP090014	MHP090015	D/S	4754	SPP090018	8	VCP			285	294.4
3	3_Moderate	210			PPT		6	19				Y	MORNINGSIDE	4/12/2007	7241	7296	MHO170046	MHO170031	D/S	382	SPO170014	8	VCP			256	259
5	3_Moderate	210			PPT		MAP 3-B3-5	20					MAGNOLIA ST	8/31/2012	10372	10371	MHK050046	MHK050050	U/S	4781	SPK050052	8	VCP			34	35.1

Structural Defect Coding: Crack: C: L	C	M	S	H	L	Fracture: F: C	M	S	H	L	Broken: B: S	V	Hole: H: S	V	Joint: J: O: S	M	L	S: M	L	A	Deformed: D	Collapsed Pipe: X	V	H	P	Surface Damage: S	Lining Failure: LF	Point Repair: RP	Sags: S	WL	PACP Quick Struct Rating	Total Structural Defects	Total Structural Defect Score	Structural Defect Index
		3				2									1																4238	22	64	2.91
		3				1																										4234	7	22	3.14
																																4233	5	17	3.40

Operational and Maintenance: Deposits: AGS	AE: B	%	AE: L	%	Other: Z	%	Roots (R): Fine (F): B	L	Tap (T): J	C	Medium (M): B	L	Ball (B): J	C	Infiltration: I: G	D	R	W	Obstacles: OB: C	Z	Other: %	Vermin: V: C	R	PACP Quick Maint Rating	Total O&M Defects	Total O&M Defect Score	O&M Defect Index
	2				1	5.00																			3	7	
							1		15																0	0	0.00
423D	61	163	2.67		6																			261B	22	29	1.32
		7	3.50				2	1																	10	0.71	
	2								2																5	9	
		2	8	4.00																					0	0	0.00
							1																		9	1.04	
	10	19																									
423B	56	115	2.05				13																4	2A14	17	30	1.76
		7	3.50				1	1		2																	
	10	19			34	5.00			1																35	69	
	1	2	2.00																						0	0	0.00
423B	23	67	2.91							1														2211	2	6	3.00
		7	3.50				2																				
	7	19			76	27	5.00																		103	206	
	2	7	3.50																						0	0	0.00
	1	2	2.00																						0	0	0.00
	7	2.33					1																		62	124	
	1	3	3.00																						0	0	0.00
423A	36	77	2.14		77				1															2N11	78	155	1.99
	7	3.50																									
	6	19					1	1															1		3	3	
	4	11	2.75																						0	0	0.00
423A	32	80	2.50						8															2A18	18	28	1.56
		7	2.33																						36	0.62	
	16	18			2																				2	4	
	1	3	3.00																						0	0	0.00
423A	24	63	2.63		85				3															2P13	88	173	1.97
		7	2.33				15	1		1	1														39	0.94	
	12	18			10	73	5.00																		83	166	
	1	4	4.00																						0	0	0.00
423A	20	49	2.45																					0000	0	0	0.00
	7	2.33					5		2		2	1		3											27	1.42	
	7	18						1	10.00				8				1								11	18	
	1	4	4.00																						0	0	0.00
423A	15	44	2.93																				1	0000	0	0	0.00
	7	2.33					34	1		4															29	1.65	
	8	17			3						1														4	9	
	3	10	3.33																						0	0	0.00
423A	19	54	2.84																					0000	0	0	1.00
	7	2.33						1	10.00	10			2												4	0.60	
	5	17			3		3	5.00																	7	17	
	1	2	2.00																						0	0	0.00
	7	2.33					2																		4	0.71	
	7	16			42	64	5.00																		106	212	
	1	2	2.00																						0	0	0.00
4236	10	30	3.00																					0000	0	0	0.00
	7	2.33					1			1															3	0.66	
	6	16																							1	2	
	1	3	3.00																						0	0	0.00
4235	28	48	1.71					1		1			1										3	4131	7	14	2.00
	7	2.33							1																3	0.55	
	10	15																							0	0	
	1	2	2.00																						0	0	0.00
4235	8	24	3.00		18																			2B00	18	36	2.00
	7	2.33																							3	1.50	
	10	15																							0	0	
	1	2	2.00																						0	0	0.00
4234	8	24	3.00																					0000	0	0	0.00
	7	2.33					1	1																	0	0.00	
	5	15			3					4													1		4	7	
	1	4	4.00																						0	0	0.00
4234	7	22	3.14																					0000	0	0	0.00
	7	2.33																							0	0.00	
	5	14			6				15																21	27	
	1	4	4.00																						0	0	0.00
4234	7	21	3.00																					0000	0	0	0.00
	6	3.00					1			1		1		1											0	0.00	
	1	2	2.00																						0	0	0.00
4233	8	23	2.88																					0000	0	0	0.00
	6	2.00																							23	0.83	
	1	2	2.00																						0	0	0.00
4233	5	17	3.40																					0000	0	0	0.00

Construction Features: Tap (Lateral): T: FD	FL	BI	BD	D	L	Line: I: U	R	LD	RD	Intruding Seal Material: IS: SRH	SRB	SRL	Z	SA	Miscellaneous: M: CU	MC	Total Construction Features	Reasons for Survey Aborted	GIS Identified Abandoned	Repair Description	Comments	Recommendations
																					DAZ=DNF 20.7' (D/SL) JOM	
																					Cracks & Fractures. Moderate Defect	Should Reline
																						Spot Repair, Cut roots
																					DSZ=DEPOSITS INGRESSES FINE (DNF)	
																						Spot Repair, Cut roots
																					377.1' MSA=PROBABLE DEPOSITS	
																						Spot Repair, Cut roots
																						Spot Repair, Cut roots
																						Spot Repair, Cut roots
																					134.6' (D/SL) & 138.3' (D/SH) JOM	
																						Spot Repair
																					66' (D/SH) JOM	
																						Replace pipe
																						Spot Repair, Cut roots
																					MHS090023 IS CLEANOUT, 3.5' & 88.4' (D/SH) JOM	
																						Spot Repair, Clear D&R
																					320' (D/SL) JOM	

Appendix D-3

| Phase | Priority | Ranking | Repair Completion Date | 2018_Project | General: Contractor | Tape No. | DVD No. | Inspection No. | Reversal Tape No. | Reversal DVD No. | Reversal Inspec. No. | DVD Watched? (Y) | Location: Street Name | Existing MH ID: Start | Existing MH ID: End | Previous MH ID: Start | Previous MH ID: End | Direction of Camera | Pipe: Existing Sewer ID | Pipe: Previous Sewer I.D. | Pipe: Size (in) | Pipe: Material | Pipe: Joint Length (ft) | Pipe: GIS Comment | Length (ft) | CCTV Length (ft) | Structural Defect Coding: Crack (C) | Fracture (F) | Broken (B) | Hole (H) | Joint (O, J) | Deformed (D) | Collapsed Pipe (X) | Surface Damage (S) | Lining Failure (LF) | Point Repair (RP) | Sags (WL) | PACP Quick Struct Rating | Total Structural Defects | Total Structural Defect Score | Structural Defect Index | Operational and Maintenance: Deposits (AGS, AE B, AE %, AE L, Other %, Other Z, Other %) | Roots (R): Fine (F) (B, L, J, C) | Roots (R): Tap (T) (B, L, J, C) | Roots (R): Medium (M) (B, L, J, C) | Roots (R): Ball (B) (B, L, J, C) | Infiltration (I) (G, D, R, W) | Obstacles (OB) (C, Z) | Obstacles (OB) Other (%, C) | Vermin (V) (R) | PACP Quick Maint Rating | Total O&M Defects | Total O&M Defect Score | O&M Defect Index | Construction Features: Tap (Lateral) (FD, FL, BI, BD) | Line: T (D, L, U, R) | Line: I (LD, RD) | Intruding Seal Material: IS (SRH, SRB, SRL) | Intruding Seal Material: IS (Z) | Miscellaneous: M (SA, CU, MO) | Total Construction Features | Reasons for Survey Aborted | GIS Identified Abandoned | Repair Description | Comments | Recommendations |
|---|---|---

Appendix D-3

Phase	Priority	Ranking	Repair Completion Date	2018_Project	Contractor	Tape No.	DVD No.	Inspection No.	Reversal Tape No.	Reversal DVD No.	Reversal Inspec. No.	DVD Watched? (Y)	Location	Street Name	CCTV Date	Existing MH ID Start	Existing MH ID End	Previous MH ID Start	Previous MH ID End	Direction of Camera	Pipe Existing Sewer ID	Pipe Previous Sewer I.D.	Pipe Size (in)	Pipe Material	Pipe Joint Length (ft)	GIS Comment	Length (ft)	CCTV Length (ft)
2	3_Moderate	233					G039	1				Y	WOODLAND LN		9/13/2005	11702	11701	MHQ120010	MHQ120009	U/S	6207	SPQ120039	6	VCP			340	367.2
3	3_Moderate	233			PPT		14	33					ANITA		6/5/2007	11960	11958	MHP160018	MHP160002	U/S	5462	SPP160016	12	VCP			90	397
5	3_Moderate	233			PPT		MAP 2 July-1	12					BROOKHURST STREET		6/20/2012	9960	9961	MHM090001	MHM090002	D/S	5366	SPM090003	8	VCP			345	350.7
1	3_Moderate	234				35		22					8172 Central Ave.		4/12/2004	7046	7047	MHJ140002	MHJ140003	D/S	675	SPJ140003	8	VCP			330	334
2	3_Moderate	234					G049	4				Y	GARDEN GROVE BLVD		10/26/2005	13248	12761	MHS130008	MHR130001	D/S	6524	SPR130013	8	VCP			240	242.1
3	3_Moderate	234			PPT		14	31					ANITA		6/5/2007	11963	11962	MHP160021	MHP160020	U/S	5328	SPP160020	6	VCP			320	335
1	3_Moderate	235		X		37		19					12622 Jackson St.		4/9/2004	7710	7711	MHJ110011	MHJ110012	D/S	743	SPJ110007	8	VCP			265	265
2	3_Moderate	235					S005	7				Y	HASTER ST		10/14/2005	12370	12426	COT110001	MHT110030	D/S	4477	SPT110037	8	VCP			120	121.4
3	3_Moderate	235			PPT		10	19					FERNWOOD		5/11/2007	10960	10962	MHP160027	MHP160028	D/S	5987	SPP160028	8	VCP			252	255
5	3_Moderate	235	2009-05-05		PPT		MAP 3-B2-5	7					FIREBRAND STREET		8/28/2012	12733	12708	MHS090022	MHS100015	D/S	6512	SPS100026	8	VCP			390	388
1	3_Moderate	236		X		41		9				x	8560 Garden Grove Blvd.		4/20/2004	8434	8443	MHK130009	MHK130010	D/S	3412	SPK130022	8	VCP	3		325	329
2	3_Moderate	236					M016	4					LEDA LN		9/8/2005	12164	12165	MHR110036	MHR110037	D/S	5094	SPR110013	6	VCP			201	73.3
3	3_Moderate	236			PPT		10	37					LINNELL AVE		5/14/2007	10972	11002	MHP160039	MHP160023	D/S	5999	SPP160040	8	VCP			194	259
5	3_Moderate	236			PPT		MAP 2-1-1	3					GILBERT STREET		7/6/2012	9286	9287A	MHL000004	MHL010006	D/S	3438	SPL000004	8	VCP			318	319.1
1	3_Moderate	237				48		20					12346 Loretta Cir.		5/14/2004	9532	9533	MHM100030	MHM100031	D/S	3237	SPM100033	8	VCP			250	255
2	3_Moderate	237					G006	2					ORANGEWOOD AV		7/19/2005	8032	7987	MHK070047	MHK070048	D/S	2406	SPK070048	8	VCP			290	293.8
3	3_Moderate	237			PPT		8	5					CORPORATE		4/27/2007	10974	10934	MHP170010	MHP180001	D/S	3900	SPP170001	8	VCP			330	332
1	3_Moderate	238	2018-10-01			51		9					12152 Meade St.		5/21/2004	9025	9026	MHL090023	MHL090024	D/S	3338	SPL090021	8	VCP			330	325
2	3_Moderate	238					R060	6				Y	NEWHOPE ST		11/28/2005	11456	11458	MHQ130010-A	MHQ130012	D/S	3815	SPQ130012	6	VCP			425	391.9
3	3_Moderate	238			PPT		8	11					CAPITAL		4/27/2007	0	0	MHP180007	MHP180008	D/S	4001	SPP180007	8	VCP			321	315
5	3_Moderate	238			PPT		MAP 3-B3-5	7				Y	DUNGAN LANE		8/31/2012	11666	11665	MHR120018	MHR120019	D/S	6159	SPR120028	8	VCP			170	172.2
1	3_Moderate	239				13		1					13302 Imperial Ave.		3/1/2004	11119	11186	MHQ140047	MHO140048	D/S	2929	SPO140055	8	VCP			332	329
2	3_Moderate	239					M018	4	M018	5			SAFFORD ST		9/12/2005	12490	12491	MHQ120023	MHQ120024	D/S	5595	SPQ120014	6	VCP			260	264.2
3	3_Moderate	239			PPT		13	13				Y	WOODBURY		5/29/2007	11483	13320	MHQ150010	MHQ150009	U/S	6712	SPQ150005	8	VCP			365	349
5	3_Moderate	239			PPT		MAP 4-B2-2	7					WESTMINSTER BOULEVARD		9/21/2012	11039	11344	MHL170018	MHL170900	D/S	2301	SPL170018	8	VCP			328	197.8
1	3_Moderate	240		X		28		26					12927 Brookhurst Wy.		3/25/2004	11333	11337	MHM120005	MHM130001	D/S	2818	SPM120005	10	VCP			300	307
2	3_Moderate	240					G014	1				Y	MAC MURRAY ST		7/29/2005	10811	10323	MHK080021	MHK080022	D/S	4730	SPK080003	8	VCP			210	203.5
3	3_Moderate	240			PPT		13	14					WOODBURY		5/29/2007	11484	11495	MHQ150011	MHQ150022	D/S	4305	SPQ150007	8	VCP			280	275
5	3_Moderate	240			PPT		MAP 4-B2-1	27					TRASK AVE		9/4/2012	14131	6681	MHT140021	MHT140026	D/S	7780	SPT140022	10	VCP			280	241.7
1	3_Moderate	241		X		33		16					12571 Josephine St.		4/1/2004	8376	8377	MHK110002	MHK110003	D/S	3347	SPK110002	8	VCP			350	351
2	3_Moderate	241					G042	9				Y	SPINNAKER ST		10/4/2005	12404	12386	MHT100034	MHT110006	D/S	3981	SPT110025	8	VCP			85	92.3
3	3_Moderate	241			PPT		13	5					LANNING		5/29/2007	11494	11493	MHQ150021	MHQ150020	U/S	4314	SPQ150016	8	VCP			275	275
5	3_Moderate	241			PPT		MAP 3-B3-5	4				Y	ALLEY		8/31/2012	11631	12205	MHR100039	MHR100005	D/S	5777	SPR100005	8	VCP			330	326.8
1	3_Moderate	242		X		8		13					12621 Groveview St.		2/17/2004	10687	10688	MHN110024	MHN110025	DS	2622	SPN110031	8	VCP			316	311
2	3_Moderate	242					M009	4				Y	GAIL LN		8/16/2005	12207	12210	MHQ070004	MHQ080004	D/S	6326	SPQ070008	8	VCP			250	252.8
3	3_Moderate	242			PPT		52	29					TRASK EASEMENT		12/28/2007	10917	10916	MHQ150030	MHQ150029	U/S	4848	SPQ150029	8	VCP			305	65
5	3_Moderate	242		X	PPT		MAP 2-2-1	22					WYNANT DRIVE		7/3/2012	7695	7696	MHJ120007	MHJ120008	D/S	728	SPJ120008	8	PVC			300	296.3
1	3_Moderate	243		X		38		6					13292 Jefferson St.		4/13/2004	7092	7063	MHJ140009	MHJ140011	DS	801	SPJ140010	8	VCP			285	285
2	3_Moderate	243					G045	6				Y	HASTER ST		10/7/2005	12658	12644	MHT100040	MHT100004	D/S	3919	SPT100035	8	VCP			183	182.7
3	3_Moderate	243			PPT		20	1					CARDINAL		6/25/2007	10920	10880	MHQ150033	MHR150009	U/S	4957	SPR150020	8	VCP			275	264
5	3_Moderate	243			PPT		MAP 3-5	17					EASY WAY		7/23/2012	9800	9801	MHO080038	MHO080039	D/S	5208	SPO080042	8	Clay Tile			335	324.7
1	3_Moderate	244				8		11					12561 Groveview St.		2/17/2004	10686	10687	MHN110023	MHN110024	DS	2621	SPN110030	8	VCP			322	323
2	3_Moderate	244					M016	7					MERRILL ST		9/8/2005	0	0	MHR100010	COR100003	U/S	5475	SPR100047	6	VCP			60	21.2
3	3_Moderate	244			PPT		13	31					A BETTER WAY		5/31/2007	10924	11438	MHQ160005	COQ160003	U/S	4857	SPQ160020	8	VCP			100	111
1	3_Moderate	245				9		10					10412 Stanford Ave.		2/19/2004	11244	11245	MHN120025	MHN120011	DS	2533	SPN120012	8	VCP			87	86
2	3_Moderate	245					G039	3					HOMESTEAD PL		9/13/2005	11709	11703	MHQ120018	MHQ120011	U/S	6209	SPQ120041	8	VCP			298	298.2
3	3_Moderate	245	2015-08-20		PPT		14	17					NEWHOPE ST		6/4/2007	10868	10869	MHQ160009	MHQ160010	D/S	4807	SPQ160011	8	VCP			330	328
5	3_Moderate	245		X	PPT		MAP 3-B3-2	6					WESTLAKE STREET		8/20/2012	11102	11105	MHO140031	MHO140034	D/S	2837	SPO140018	10	VCP			350	345
1	3_Moderate	246				11		15					11060 Sherman Ave.		2/23/2004	11882	11883	MHP130021	MHP130022	DS	4287	SPP130014	8	VCP			155	149
2	3_Moderate	246					G004	10				Y	POES ST		7/15/2005	8551	8552	MHJ080020	MHJ080021	D/S	2051	SPJ080018	8	VCP			245	238.6
3	3_Moderate	246			PPT		14	5					ANABEL		6/1/2007	11506	11952	MHQ160016	MHP160008	D/S	3846	SPP160024	8	VCP			200	199
1	3_Moderate	247				16		12					9971 Lenore Dr.		3/4/2004	12024	10743	MHM110026	MHM110028	DS	2733	SPM110029	8	VCP			300	302
2	3_Moderate	247					G005	5				Y	MOEN ST		7/18/2005	8546	8547	MHJ080012	MHJ080013	D/S	2046	SPJ080013	8	VCP			180	186.5
3	3_Moderate	247			PPT		20	2					CARDINAL		6/25/2007	10880	10879	MHR150009	MHR150008	U/S	4346	SPR150008	8	VCP			85	84
5	3_Moderate	247			PPT		MAP 3-B3-3	1					BANNER DRIVE		8/27/2012	11440	10866	MHQ140018	MHQ140019	D/S	3848	SPQ140027	8	VCP			340	337.3
1	3_Moderate	248		X		24		19					13280 Shapell		3/18/2004	12069	12073	MHM140007	MHM140010	DS	2522	SPM140044	8	VCP			254	255
2	3_Moderate	248					G005	13				Y	ORANGEWOOD AV		7/18/2005	8502	8710	MHK070038	COK070001	U/S	2086	SPK070041	8	VCP			100	101.4
5	3_Moderate	248			PPT		MAP 3-B3-1	2					GLEN STREET		8/6/2012	12600	12601	MHQ110022	MHQ110023	D/S	4127	SPQ110003	8	VCP			370	382.5
1	3_Moderate	249		X		28		2					13331 La Vaughn St.		3/23/2004	11543	11544	MHL140034	MHL140035	DS	2711	SPL140019	8	VCP			350	347
3	3_Moderate	249			PPT		14	27					WOODBURY		6/4/2007	7539	7540	MHR150011	MHR150012	D/S	569	SPR150010	8	VCP			378	374
5	3_Moderate	249			PPT		MAP 4-B1-5	18					11th STREET		9/19/2012	6906	6907	MHM180004	MHM180005	D/S	200	SPM180003	8	VCP			382	381.5
1	3_Moderate	250				5		7				x	10552 Lampson Ave.		2/9/2004	11147	11136	MHO110030	MHO110018	DS	2372	SPO110024	8	VCP	3		180	196
2	3_Moderate	250					G005	8				Y	MACDUFF ST		7/18/2005	8066	8067	MHK070030	MHK070031	D/S	1918	SPK070033	8	VCP			168	170.3
3	3_Moderate	250			PPT		16	24					LAUREL		6/14/2007	7512	7513	MHR160001	MHR160002	D/S	485	SPR160001	8	VCP			398	401
5	3_Moderate	250			PPT		June Map 2 B1	3					GILBERT STREET		6/4/2012	9282	9283	MHL990005	MHL000001	D/S	3683	SPL000001	8	VCP			300	306.7
1	3_Moderate	251				26		1				x	9452 Luders		3/19/2004	12076	12077	MHM140013	MHM140014	DS	2514	SPM140037	8	VCP	5		385	385
2	3_Moderate	251					G010	5					FILLMORE DR		7/25/2005	8595	8596	MHJ080027	MHJ080028	D/S	2420	SPJ080031	8	VCP			120	117.9
3	3_Moderate	251			PPT		16	25					LAUREL		6/14/2007	7513	7514	MHR160002	MHR160003	D/S	486	SPR160002	8	VCP			398	397
5	3_Moderate	251		X	PPT		MAP 2-1-5	4				Y	HAZEL AVE		7/19/2012	8497	8498	MHL120031	MHL130011	D/S	3157	SPL120030	8	VCP			303	303.8
1	3_Moderate	252		X		41		6					12222 Acacia Pkwy.		4/16/2004	11020	11021	MHP120016	MHP120017	DS	5137	SPP120015	6	VCP			331	330
2	3_Moderate	252					G028	7					CHAPMAN AV		8/25/2005	12919	12561	MHP090019	MHP090018	U/S	6262	SPP090027	12	VCP			330	329.6
3	3_Moderate	252			PPT		16	26					LAUREL		6/14/2007	7514	7515	MHR160003	MHR170001	D/S	487	SPR160003	8	VCP			374	403
5	3_Moderate	252			PPT		MAP 3-B3-3	5					BANNER DRIVE		8/27/2012	10914	10893	MHQ140026	MHQ140015	D/S	4470	SPQ140043	8	VCP			180	293.8
2	3_Moderate	253					G045	7				Y	EASEMENT		10/7/2005	12657	12658	MHT100039	MHT100040	D/S	3918	SPT100034	8	VCP			320	315.9
3	3_Moderate	253	2019-10-12		PPT		15	10					ENTERPRISE		6/9/2007	7518	7519	MHR160005	MHR160006	D/S	489	SPR160005	8	VCP			206	202
5	3_Moderate	253			PPT		MAP 3-B3-3	2					BANNER DRIVE		8/27/2012	10895	11440	MHQ140017	MHQ140018	D/S	3706	SPQ140002	8	VCP			345	339
1	3_Moderate	254				1		5					12142 Artcraft St.		2/3/2004	11152	11153	MNW24027	MNW24028	DS	2571	SPO090034	8	VCP			365	365

Phase	Priority	Crack C	Fracture F	Broken B	Hole H	Joint J	Deformed D	Collapsed Pipe X	Surface Damage S	Lining Failure LF	Point Repair RP	Sags WL	PACP Quick Struct Rating	Total Structural Defects	Total Structural Defect Score	Structural Defect Index
		L C M S H	L C M S H	SV VV SV VV	S M L S M L A V H P	S										
2	3_Moderate				2									2	6	
3	3_Moderate				1									1	3	3.00
5	3_Moderate	1 2 15	1										413B	19	53	2.79
1	3_Moderate		2											5	2.50	
2	3_Moderate				2									2	6	
3	3_Moderate				1									1	3	3.00
1	3_Moderate	1	1											5	2.50	
2	3_Moderate				2									2	6	
3	3_Moderate			1 1										2	6	3.00
5	3_Moderate	4 15	1										413B	20	53	2.65
1	3_Moderate	1	1											5	2.50	
2	3_Moderate				2									2	6	
3	3_Moderate			1 1										2	6	3.00
5	3_Moderate	1 3 10	1									1	413A	17	44	2.59
1	3_Moderate		1											5	2.50	
2	3_Moderate	1	1											3	6	
3	3_Moderate				2									2	6	3.00
1	3_Moderate		1											5	1.67	
2	3_Moderate		1											2	6	
3	3_Moderate				2									2	6	3.00
5	3_Moderate	10 8	1 1										4139	20	50	2.50
1	3_Moderate		2											5	1.67	
2	3_Moderate		1											2	6	
3	3_Moderate		1											1	4	4.00
5	3_Moderate	2 8	1										4139	12	35	2.92
1	3_Moderate	1	2											5	2.50	
2	3_Moderate	1												2	5	
3	3_Moderate		1											1	8	2.67
5	3_Moderate	3 2 7	2 1									1	4135	13	39	2.60
1	3_Moderate	1	1											5	1.25	
2	3_Moderate	1												2	4	
3	3_Moderate				1									2	5	2.50
5	3_Moderate	12 1 8	1										4138	22	53	2.41
1	3_Moderate	3	1											5	2.50	
2	3_Moderate	1												2	5	
3	3_Moderate				1									1	3	3.00
5	3_Moderate	7 4 3	1										4138	21	48	2.29
1	3_Moderate	1	1											5	1.25	
2	3_Moderate	1												2	4	
3	3_Moderate				1									1	3	3.00
5	3_Moderate	5 1 5	1										4135	12	30	2.50
1	3_Moderate	1	1											5	2.50	
2	3_Moderate				1									1	3	
3	3_Moderate				1									2	6	3.00
5	3_Moderate	4 4	1 1										4137	15	39	2.60
1	3_Moderate	1	1											5	2.50	
2	3_Moderate				1									1	3	
3	3_Moderate				2									3	10	3.33
1	3_Moderate				1									5	2.50	
2	3_Moderate				1									1	3	
3	3_Moderate				1									2	5	
5	3_Moderate	1 5	1 1										4136	11	29	2.64
1	3_Moderate				1									5	2.50	
2	3_Moderate				1									1	3	
3	3_Moderate				1									1	1	
5	3_Moderate	4 6	1										4136	11	30	2.73
1	3_Moderate	1	1											5	1.67	
2	3_Moderate				2									2	6	3.00
5	3_Moderate	1 4	1										4136	8	23	2.88
1	3_Moderate	2 1												5	2.50	
2	3_Moderate				1									1	3	
3	3_Moderate		1											1	2	2.00
5	3_Moderate	2 1 5	1										4135	9	24	2.67
1	3_Moderate	1 1												5	1.67	
2	3_Moderate				1									1	3	
3	3_Moderate				2									2	8	4.00
5	3_Moderate	3 4 5										1	4135	13	27	2.08
1	3_Moderate	2 1												5	2.50	
2	3_Moderate				1									1	3	
3	3_Moderate				1									2	5	
5	3_Moderate	1 4	1										4136	8	23	2.88
1	3_Moderate				1									5	2.50	
2	3_Moderate				1									1	3	
3	3_Moderate				1									2	6	3.00
5	3_Moderate	2 1 5	1										4135	9	24	2.67
1	3_Moderate	1 1												5	1.67	
2	3_Moderate				1									1	3	
3	3_Moderate				2									2	8	4.00
5	3_Moderate	3 4 5										1	4135	13	27	2.08
1	3_Moderate	2 1												5	2.50	
2	3_Moderate				1									1	3	
3	3_Moderate				1									2	5	2.50
5	3_Moderate	5 1 5	1										4135	12	30	2.50
1	3_Moderate	1	1											5	2.50	
2	3_Moderate				1									1	3	
3	3_Moderate				1									2	6	3.00
5	3_Moderate	4 4	1 1										4135	10	27	2.70
1	3_Moderate	1 3												5	2.50	

Phase	Priority	Operational and Maintenance: Deposits AGS	Deposits AE B	Deposits AE %	Deposits AE L	Deposits AE %	Deposits Other Z	Deposits Other %	Roots (R) Fine (F) B	Roots (R) Fine (F) L	Roots (R) Fine (F) J	Roots (R) Tap (T) C	Roots (R) Tap (T) B	Roots (R) Tap (T) L	Roots (R) Tap (T) J	Roots (R) Tap (T) C	Roots (R) Medium (M) B	Roots (R) Medium (M) L	Roots (R) Medium (M) J	Roots (R) Medium (M) C	Roots (R) Ball (B) B	Roots (R) Ball (B) L	Roots (R) Ball (B) J	Roots (R) Ball (B) C	Infiltration I	Obstacles OB	Obstacles Other C	Obstacles Other Z	Obstacles Other %	Vermin V C	Vermin V R	PACP Quick Maint Rating	Total O&M Defects	Total O&M Defect Score	O&M Defect Index
2	3_Moderate	2					1	5.00		1	10								1													15	21	
3	3_Moderate																														0	0	0.00	
5	3_Moderate	68																								2L00	68	136	2.00				
1	3_Moderate																														5	0.48		
2	3_Moderate	2					1	10.00																							3	7		
3	3_Moderate																														0	0	0.00	
1	3_Moderate								2	1																						5	2.50	
2	3_Moderate																														0	0		
3	3_Moderate																														0	0	0.00	
5	3_Moderate																														0	0	0.00	
1	3_Moderate																														0	0

Appendix D-3

Phase	Priority	Ranking	Repair Completion Date	2018_Project	General: Contractor	Tape No.	DVD No.	Inspection No.	Reversal Tape No.	Reversal DVD No.	Reversal Inspec. No.	DVD Watched? (Y)	Location: Street Name	CCTV Date	Existing MH ID: Start	Existing MH ID: End	Previous MH ID: Start	Previous MH ID: End	Direction of Camera	Pipe: Existing Sewer ID	Pipe: Previous Sewer ID	Pipe: Size (in)	Pipe: Material	Pipe: Joint Length (ft)	Pipe: GIS Comment	Length (ft)	CCTV Length (ft)
2	3_Moderate	254					G050	5				Y	PALM ST	10/27/2005			MHR130004-A	MHR130005-A	D/S		SPR130004-A	8	VCP			281	281.4
3	3_Moderate	254			PPT		18	42					QUATRO	6/21/2007	7551	7536	MHR160023	MHR160019	U/S	577	SPR160030	8	VCP			265	262
5	3_Moderate	254			PPT		MAP 3-B3-2	24					MIRRILL STREET	8/8/2012	11684	11685	MHR100010	MHR100011	D/S	6165	SPR100038	8	VCP			351	337.6
1	3_Moderate	255				16		17					12681 Susan Ln.	3/4/2004	10746	10729	MHM110031	MHM120007	D/S	2664	SPM110020	8	VCP			300	336
2	3_Moderate	255					G050	6					PALM ST	10/27/2005			MHR130005-A	MHS140001-A	D/S		SPR130005-A	8	VCP			280	279.5
3	3_Moderate	255			PPT		27	12					HARBOR	7/20/2007	7553	7554	MHR160025	MHR160026	D/S	853	SPR160027	12	VCP			272	279
5	3_Moderate	255			PPT		MAP 3-B3-4	24					NEWHOPE STREET	8/29/2012	10864	10865	MHQ140013	MHQ140014	D/S	4802	SPQ140021	8	VCP			215	212.3
1	3_Moderate	256				18		1					13121 Cypress St.	3/5/2004	11170	11173	MHO130042	MHO130045	DS	2486	SPO130046	8	VCP			310	315
2	3_Moderate	256					G041	5					OTIS AV	9/23/2005	12735	12858	MHS090024	COS090002	U/S	6514	SPS090009	8	VCP			110	111.3
3	3_Moderate	256			PPT		51	3					HARBOR BLVD	12/22/2007	7554	7555	MHR160026	MHR160027	D/S	854	SPR160028	12	VCP			280	280
5	3_Moderate	256			PPT		MAP 2 July-2	3					FAUN LANE	6/21/2012	10797	10798	MHL080025	MHL080026	D/S	4340	SPL080025	8	VCP			300	302.5
1	3_Moderate	257				44		31					12765 Village Dr.	4/28/2004	12032	12031	MHM120022	MHM120021	U/S	2739	SPM120021	8	VCP			130	170
2	3_Moderate	257					G050	8				Y	MARBLE PL	10/27/2005	12758	12764	MHS130011	MHR130004-A	D/S	6527	SPS130017	8	VCP			405	395.9
3	3_Moderate	257			PPT		17	36					PARTRIDGE	6/18/2007	6722	6700	MHS140024	MHS130024	U/S	525	SPS140002	8	VCP			165	167
5	3_Moderate	257			PPT		MAP 3-B3-2	10					JESSICA DRIVE	8/10/2012	11112	11113	MHO140040	MHO140041	D/S	2361	SPO140027	8	VCP			255	245.1
1	3_Moderate	258				49		19					9391 Mayrene Dr.	5/18/2004	9569	9570	MHL110010	MHL110011	DS	3297	SPL110011	8	VCP			230	227
2	3_Moderate	258					G050	9				Y	FLINT PL	10/27/2005	12759	12765	MHS130012	MHR130005-A	D/S	6528	SPS130018	8	VCP			405	395.4
3	3_Moderate	258			PPT		18	2					REDBIRD	6/18/2007	6729	7438	MHS140034	MHS140035	D/S	547	SPS140029	8	VCP			240	242
5	3_Moderate	258			PPT		June Map 2 B1	75					VICILIA STREET	6/14/2012	7989	7990	MHK060008	MHK060009	D/S	1846	SPK060004	8	VCP			182	175.6
1	3_Moderate	259				4		16					11332 Lampson	2/10/2004	11028	11029	MHP110011	MHP110012	DS	5236	SPP110008	8	VCP			340	343
2	3_Moderate	259					M018	7					SAFFORD ST	9/12/2005	12493	12492	MHQ120026	MHQ120025	U/S	5597	SPQ120016	6	VCP			90	89.4
3	3_Moderate	259			PPT		16	32					ANABEL	6/14/2007	7468	7469	MHS160003	MHS160004	D/S	449	SPS160003	8	VCP			366	366
5	3_Moderate	259			PPT		MAP 3-B3-4	29					BANNER DRIVE	8/29/2012	11985	11988	MHR140029	MHR140032	D/S	3866	SPR140032	8	VCP			180	176.1
1	3_Moderate	260		X		27		9					12741 Gilbert St.	3/22/2004	8454	8453	MHL120001	MHL110001	US	3112	SPL120001	8	VCP			80	84
2	3_Moderate	260					R057	2					NINA PL	11/10/2005	11481	11464	MHQ140038	MHQ140004	D/S	4209	SPQ140019	8	VCP			275	274.6
3	3_Moderate	260			PPT		16	9					CLINTON	6/13/2007	7506	7507	MHS160017	MHS160018	D/S	480	SPS160026	8	VCP			328	336
5	3_Moderate	260			PPT		MAP 1	4					LAURELTON AVENUE	5/15/2012	8273	8274	MHG090010	MHG090011	D/S	1062	SPG090014	8	VCP			150	149.9
1	3_Moderate	261		X		30		15					8681 Trask	3/30/2004	7641	7642	MHK150003	MHK150004	DS	997	SPK150002	8	VCP			330	331
2	3_Moderate	261					R045	4				Y	HARBOR BLVD	10/27/2005	12139	12138	MHS090033	MHS090032	U/S	5832	SPS090021	8	VCP			320	319.5
3	3_Moderate	261			PPT		15	39					WESTMINSTER	6/11/2007	7483	7508	MHS170005	MHS170006	D/S	582	SPS170024	12	VCP			353	353
5	3_Moderate	261		X	PPT		MAP 4-B1-4	7					FLOWER STREET	9/18/2012	10480	10481	MHN150013	MHN150015	D/S	2227	SPN150009	8	VCP			400	404
1	3_Moderate	262		X		32		1					13431 Mickey St.	3/31/2004	11529	14107	MHL140025	MHL150007	DS	2703	SPL140011	8	VCP			250	246
2	3_Moderate	262					S006	11				Y	FOREST DR	10/18/2005	12692	12693	MHS120042	MHS120043	D/S	6376	SPS120018	8	VCP			240	231.6
3	3_Moderate	262			PPT		18	32					DOWNIE	6/20/2007	0	0	MHT140012	MHT140031	D/S		SPT140013	8	VCP			265	259
5	3_Moderate	262			PPT		MAP 4-B2-3	14					NEWLAND STREET	9/25/2012	6995	7006	MHK160015	MHK160015 A	D/S	337	SPK160015A	8	VCP			194	192.7
1	3_Moderate	263				36		12					12550 Monroe St.	4/7/2004	7701	7702	MHJ110002	MHJ110004	DS	734	SPJ110001	8	VCP			260	260
2	3_Moderate	263					S006	9				Y	FOREST DR	10/18/2005	12692	12094	MHS120042	MHS120041	U/S	6035	SPS120059	8	VCP			300	294.2
3	3_Moderate	263			PPT		20	5					RANCHERO	6/25/2007	14124	6674	MHT140020	MHT140019	U/S	7765	SPT140020	6	VCP			435	431
5	3_Moderate	263			PPT		MAP 2-2-2	22					DUDMAM DRIVE	7/16/2012	9089	9090	MHK100012	MHK100013	D/S	3551	SPK100012	8	Clay Tile			105	105.8
1	3_Moderate	264		X		40		33					Trask Ave./Wynant	4/16/2004	7070	7076	MHJ150003	MHJ150004	DS	769	SPJ150003	8	VCP			240	239.1
2	3_Moderate	264					G051	7				Y	MUSTANG DR	10/31/2005	11982	11981	MHR130016	MHR130015	U/S	3862	SPR130017	8	VCP			90	89.1
3	3_Moderate	264			PPT		18	25					ROBERTA	6/19/2007	6678	6677	MHT140023	MHT140022	U/S	506	SPT140023	8	VCP			120	113
5	3_Moderate	264		X	PPT		MAP 3-B5	4					SHERMAN AVENUE	9/19/2012	11876	11877	MHP130015	MHP130016	D/S	3906	SPP130008	6	VCP			250	254.9
1	3_Moderate	265				51		3					12331 Loraleen St.	5/20/2004	9591	9592	MHL100025	MHL100026	DS	3315	SPL100007	8	VCP			372	372
2	3_Moderate	265					R008	6				Y	ALWICK CR	8/8/2005	9745	9751	MHL050027	MHL050028	D/S	5560	SPL050033	8	VCP			366	358.2
3	3_Moderate	265			PPT		18	17					GLORIA	6/19/2007	6684	6683	MHT140029	MHT140028	U/S	510	SPT140028	8	VCP			208	212
5	3_Moderate	265			PPT		MAP 3-2	19					PALMA VISTA STREET	7/24/2012	13162	12792	MHP050006	MHP050004	U/S	5614	SPP050004	8	VCP			280	284
1	3_Moderate	266				20		7					12631 Barbara Ave.	3/10/2004	9363	9364	MHL110041	MHL110042	DS	3168	SPL110043	8	VCP			300	300
2	3_Moderate	266					R028	11					9TH ST	9/19/2005	12542	12544	MHP100037	MHP100039	D/S	6061	SPP100007	10	VCP			170	104.4
3	3_Moderate	266			PPT		19	2					GARDEN GROVE BLVD	6/21/2007	7036	7035	MHU130006	MHU130005	U/S	357	SPU130005	8	VCP			260	259
5	3_Moderate	266			PPT		MAP 3-B4-2	11					CHAPMAN AVE	10/2/2012	12959	12954	MHO090001	MHO090011	D/S	6298	SPO090001	15	VCP			50	46.7
1	3_Moderate	267		X		23		19					12562 Hazel Ave.	3/17/2004	9371	9370	MHL110049	MHL110048	US	3207	SPL110050	8	VCP			290	291
2	3_Moderate	267					R039	4				Y	ALLEY	9/30/2005	12678	12659	MHT090021	MHT100041	D/S	4034	SPT090033	8	VCP			150	146.6
3	3_Moderate	267			PPT		19	5					LEWIS	6/21/2007	7042	6627	MHU130011	MHU130016	D/S	364	SPU130012	8	VCP			291	293
5	3_Moderate	267			PPT		MAP 3-B3-4	1					JERRY LANE	8/30/2012	12548	12605	MHQ100026	MHQ100027	D/S	4763	SPQ100020	8	VCP			235	243
1	3_Moderate	268				40		21					13082 Monroe St.	4/15/2004	7721	7722	MHJ130012	MHJ130013	DS	785	SPJ130007	8	VCP			220	220
2	3_Moderate	268					R039	7					ALLEY	9/30/2005	12661	12662	MHT100043	MHT100044	D/S	3922	SPT100038	8	VCP			225	220.3
3	3_Moderate	268			PPT		19	23					LEWIS	6/22/2007	6629	6643	MHU140008	MHT140002	D/S	371	SPT140001	8	VCP			214	220
5	3_Moderate	268			PPT		MAP 3-B3-4	30					ROCKINGHORSE ROAD	8/28/2012	10913	10914	MHQ140025	MHQ140026	D/S	4469	SPQ140042	8	VCP			370	350.7
1	3_Moderate	269		X		12		19					13302 Benton St.	2/27/2004	11180	11181	MHO140043	MHO140045	DS	2274	SPO140034	8	VCP			170	331
2	3_Moderate	269					R040	4				Y	HASTER ST	10/3/2005	12680	12679	MHT090041	MHT090040	U/S	6362	SPT090037	8	VCP			385	384.7
5	3_Moderate	269			PPT		MAP 1	2	MAP 1	1			LAURELTON AVENUE	5/15/2012	8275	7330	MHG090012	MHG090013	D/S	1318	SPG090055	8	VCP			350	317.4
1	3_Moderate	270		X		13		18					10942 Lampson Ave.	3/2/2004	12304	11008	MHO110028	CO0110001	US	3951	SPO110019	8	VCP			250	218
2	3_Moderate	270					M010	9				Y	CANDY LN	8/22/2005	13142	13143	MHQ080044	MHQ080045	D/S	5854	SPQ080054	8	VCP			230	233.2
5	3_Moderate	270			PPT		June Map 2 B1	82					ORANGEWOOD AVE	6/15/2012	7991	7992	MHK070015	MHK070016	D/S	1847	SPK070014	8	VCP			385	390.4
1	3_Moderate	271				45		28					Euclid St./Pinehurst Pvt.	5/5/2004	11745	11746	MHP120033	MHP120034	DS	4400	SPP120034	8	VCP			35	30
2	3_Moderate	271					S003	6					DUNKLEE AV	10/12/2005	12466	12409	MHT120013	MHT120014	D/S	4587	SPT120029	8	VCP			293	293.0
5	3_Moderate	271		X	PPT		MAP 3-5	11					FRIEDA PLACE	7/24/2012	11208	11134	MHO100017	MHO110016	D/S	2385	SPO100018	8	Clay Tile			259	256.1
1	3_Moderate	272				46		13					12241 Hester Pl.	5/7/2004	9491	9490	MHM100008	MHM100007	US	3577	SPM100011	8	VCP			95	102
2	3_Moderate	272					S002	10					ARLETTA CR	10/11/2005	12380	12381	MHT120018	MHT120019	D/S	5441	SPT120006	8	VCP			130	126.8
5	3_Moderate	272		X	PPT		MAP 2-2-1	1					LOUISE STREET	7/3/2012	8434	8432	MHK130009	MHK120034	U/S	3410	SPK120036	8	Clay Tile			311	318.4
1	3_Moderate	273		X		42		22					12843 Josephine St.	4/20/2004	8393	8399	MHK120008	MHK120016	DS	3367	SPK120011	8	VCP			325	325
5	3_Moderate	273			PPT		MAP 3-B3-2	15					CYPRESS STREET	8/10/2012	11168	11169	MHO130040	MHO130041	D/S	2585	SPO130044	8	VCP			360	360.4
1	3_Moderate	274				46		24					9771 Beverly Ln.	5/10/2004	9499	9498	MHM100018	MHM100017	US	3424	SPM100020	8	VCP			130	133
5	3_Moderate	274			PPT		MAP 3-2	6					EUCLID STREET	7/24/2012	13154	12795	MHO050001	COO050001	U/S	6603	SPO050021	8	VCP			135	136.3
1	3_Moderate	275				51		8					9262 Judy Ln.	5/21/2004	9016	9017	MHL090014	MHL090015	DS	3329	SPL090012	8	VCP			225	218
5	3_Moderate	275			PPT		MAP 3-B3-5	16					ORANGEWOOD AVE	8/31/2012	10373	10834	MHK070050	MHL070044	D/S	4784	SPK070051	8	VCP			36	33.7
1	3_Moderate	276				28		24			x		12833 Brookhurst Wy.	3/25/2004	11331	11332	MHM120003	MHM120004	DS	2816	SPM120003	10	VCP	4		235	245
5	3_Moderate	276			PPT		MAP 3-B3-1	21					LAMPSON AVENUE	8/2/2012	12588	12527	MHP110023	MHP110024	D/S	5092	SPP110023	6	Clay Tile			300	299.8
1	3_Moderate	277				49		1			x		9561 Bixby Ave.	5/14/2004	9526	9412	MHM100024	COM100001	US	3283	SPM100046	6	VCP	4		80	95

Structural Defect Coding: Crack: C	Crack: L	Crack: C	Crack: M	Crack: S	Crack: H	Fracture: F	Fracture: L	Fracture: C	Fracture: M	Fracture: S	Fracture: H	Broken: B	Broken: S	Hole: H	Hole: V	Joint: V	Joint: S	Joint: O	Joint: M	Joint: L	Joint: S	Joint: M	Joint: L	Joint: A	Deformed: D	Deformed: V	Collapsed Pipe: X	Collapsed Pipe: H	Collapsed Pipe: P	Surface Damage: S	Lining Failure: LF	Point Repair: RP	Sags: S	Sags: WL	PACP Quick Struct Rating	Total Structural Defects	Total Structural Defect Score	Structural Defect Index
																	1																		1	3		
																														1	5.00				1	3		
																	1																		0	0	0.00	
																	2																	4135	6	19	3.17	
									5																					27								
							1																										1					
																																		312E	29	64	2.21
																																			1			

Appendix D-3

| Phase | Priority | Ranking | Repair Completion Date | 2018_Project | Contractor | Tape No. | DVD No. | Inspection No. | Reversal Tape No. | Reversal DVD No. | Reversal Inspec. No. | DVD Watched? (Y) | Location | Street Name | CCTV Date | Existing MH ID Start | Existing MH ID End | Previous MH ID Start | Previous MH ID End | Direction of Camera | Pipe Existing Sewer ID | Pipe Previous Sewer I.D. | Pipe Size (in) | Pipe Material | Pipe Joint Length (ft) | Pipe GIS Comment | Pipe Length (ft) | Pipe CCTV Length (ft) | Structural Defect Coding: Crack C | Fracture F | Broken B | Hole H | Joint J | Deformed D | Collapsed Pipe X | Surface Damage S | Lining Failure LF | Point Repair RP | Sags WL | PACP Quick Struct Rating | Total Structural Defects | Total Structural Defect Score | Structural Defect Index | Operational and Maintenance: Deposits D | Roots (R) | Fine (F) | Tap (T) | Medium (M) | Ball (B) | Infiltration I | Obstacles OB | Vermin V | PACP Quick Maint Rating | Total O&M Defects | Total O&M Defect Score | O&M Defect Index | Construction Features: Tap (Lateral) T | Line L | Intruding Seal Material IS | Miscellaneous M | Total Construction Features | Reasons for Survey Aband | GIS Identified Abandoned | Repair Description | Comments | Recommendations |
|---|---|---

Appendix D-3

| Phase | Priority | Ranking | Repair Completion Date | 2018_Project | General: Contractor | Tape No. | DVD No. | Inspection No. | Reversal Tape No. | Reversal DVD No. | Reversal Inspec. No. | DVD Watched? (Y) | Location: Street Name | CCTV Date | Existing MH ID: Start | Existing MH ID: End | Previous MH ID: Start | Previous MH ID: End | Direction of Camera | Pipe: Existing Sewer ID | Previous Sewer ID | Size (in) | Material | Joint Length (ft) | GIS Comment | Length (ft) | CCTV Length (ft) | Structural Defect Coding: Crack C (L C M S H) | Fracture F (L C M S H) | Broken B (SV VV) | Hole H (SV VV) | Joint J: O (S M) | Joint J: S (M L S M L A) | Deformed D | Collapsed Pipe X (V H P) | Surface Damage S | Lining Failure (LF) | Point Repair (RP) | Slope WL (S) | PACP Quick Struct Rating | Total Structural Defect Score | Total Structural Defect Index | Structural Defect Index | Operational and Maintenance: Deposits D: AGS | AE B | AE % | AE L | AE % | Other Z | Other % | Roots (R): Fine (F) B | Fine (F) L | Fine (F) J | Tap (T) C | Tap (T) B | Tap (T) L | Tap (T) J | Medium (M) C | Medium (M) B | Medium (M) L | Medium (M) J | Ball (B) C | Ball (B) B | Ball (B) L | Ball (B) J | Infiltration I: C | G | D | R | W | Obstacles O: C | Z | Other % | Vermin V: C | R | PACP Quick Maint Rating | Total O&M Defects | Total O&M Defect Score | O&M Defect Index | Construction Features: Tap (Lateral) T: FD | FL | BI | BD | D | Line L: U | R | LD | RD | Intruding Seal Material IS: SRH | SRB | SRL | Z | Miscellaneous M: SA | CU | MC | Total Construction Feature | Reasons for Survey Aband | GIS Identified Abandoned | Repair Description | Comments | Recommendations |
|---|---|---

Appendix D-3

| Phase | Priority | Ranking | Repair Completion Date | 2018_Project | General | | |

Appendix D-3

| Phase | Priority | Ranking | Repair Completion Date | 2018_Project | General: Contractor | Tape No. | DVD No. | Inspection No. | Reversal Tape No. | Reversal DVD No. | Reversal Inspec. No. | DVD Watched? (Y) | Location: Street Name | CCTV Date | Existing MH ID: Start | Existing MH ID: End | Previous MH ID: Start | Previous MH ID: End | Direction of Camera | Pipe: Existing Sewer ID | Pipe: Previous Sewer ID | Pipe: Size (in) | Pipe: Material | Pipe: Joint Length (ft) | Pipe: GIS Comment | Length (ft) | CCTV Length (ft) | Structural Defect Coding: Crack: C L | Crack: C C | Crack: C M | Crack: C S | Crack: C H | Fracture: F L | Fracture: F C | Fracture: F M | Fracture: F S | Fracture: F H | Broken: B SV | Hole: H VV | Joint: J SV | Joint: J VV | Joint: J O S | Joint: J O M | Joint: J O L | Joint: J S S | Joint: J S M | Joint: J S L | Joint: J A | Joint: J V | Joint: J H | Joint: J P | Deformed: D | Collapsed Pipe: X | Surface Damage: S | Lining Failure: LF | Point Repair: RP | Sags: WL | PACP Quick Struct Rating | Total Structural Defects | Total Structural Defect Score | Structural Defect Index | Operational and Maintenance: Deposits: AGS | Deposits: AE B | Deposits: AE % | Deposits: AE L | Deposits: AE % | Deposits: Other Z | Deposits: Other % | Roots (R): Fine (F) B | Roots (R): Fine (F) L | Roots (R): Fine (F) J | Roots (R): Tap (T) C | Roots (R): Tap (T) B | Roots (R): Tap (T) L | Roots (R): Tap (T) J | Roots (R): Medium (M) C | Roots (R): Medium (M) B | Roots (R): Medium (M) L | Roots (R): Medium (M) J | Roots (R): Ball (B) C | Roots (R): Ball (B) B | Roots (R): Ball (B) L | Roots (R): Ball (B) J | Infiltration: I C | Obstacles: O G | Obstacles: O D | Obstacles: O R | Vermin: V W | Obstacles: Other C | Obstacles: Other Z | Obstacles: Other % | Vermin: V C | Vermin: V R | PACP Quick Maint Rating | Total O&M Defects | Total O&M Defect Score | O&M Defect Index | Construction Features: Tap (Lateral): T FD | T FL | T BI | T BD | Line: L D | L L | L U | L R | L LD | L RD | Intruding Seal Material: IS SRH | IS SRB | IS SRL | IS Z | Miscellaneous: M SA | M CU | M MC | Total Construction Feature | Reasons for Survey Aborted | GIS Identified Abandoned | Repair Description | Comments | Recommendations |
|---|---|---

Appendix D-3

| Phase | Priority | Ranking | Repair Completion Date | 2018_Project | Contractor | Tape No. | DVD No. | Inspection No. | Reversal Tape No. | Reversal DVD No. | Reversal Inspec. No. | DVD Watched? (Y) | Location | Street Name | CCTV Date | Existing MH ID Start | Existing MH ID End | Previous MH ID Start | Previous MH ID End | Direction of Camera | Existing Sewer ID | Previous Sewer ID | Pipe Size (in) | Pipe Material | Pipe Joint Length (ft) | GIS Comment | Length (ft) | CCTV Length (ft) | Crack L | Crack C | Crack M | Crack S | Crack H | Fracture L | Fracture C | Fracture M | Fracture S | Fracture H | Broken SV | Broken VV | Hole SV | Hole VV | Joint O S | Joint O M | Joint O L | Joint S M | Joint S L | Joint A | Joint V | Joint H | Joint P | Deformed D | Collapsed/ Flat X | Surface Damage S | Lining Failure LF | Point Repair RP | Sags S | WL | PACP Quick Struct Rating | Total Structural Defects | Total Structural Defect Score | Structural Defect Index | Operational and Maintenance: Deposits AGS | Deposits AE B | Deposits AE % | Deposits AE L | Deposits AE % | Deposits Other Z | Deposits Other % | Roots (R) Fine (F) B | Roots (R) Fine (F) L | Roots (R) Fine (F) J | Roots (R) Tap (T) C | Roots (R) Tap (T) B | Roots (R) Tap (T) L | Roots (R) Tap (T) J | Roots (R) Medium (M) C | Roots (R) Medium (M) B | Roots (R) Medium (M) L | Roots (R) Medium (M) J | Roots (R) Ball (B) C | Roots (R) Ball (B) B | Roots (R) Ball (B) L | Roots (R) Ball (B) J | Infiltration I | Obstacles OB | Obstacles Other C | Obstacles Other Z | Obstacles Other % | Vermin C | Vermin R | PACP Quick Maint Rating | Total O&M Defects | Total O&M Defect Score | O&M Defect Index | Construction Features: Tap (Lateral) T FD | Tap (Lateral) T FL | Tap (Lateral) T BI | Tap (Lateral) T BD | Line D | Line L | Line U | Line R | Line LD | Intruding Seal Material RD | Intruding Seal Material SRH | Intruding Seal Material SRB | Intruding Seal Material SRL | Intruding Seal Material Z | Miscellaneous SA | Miscellaneous CU | Miscellaneous MC | Total Construction Feature | Reasons for Survey Aborted | GIS Identified Abandoned | Repair Description | Comments | Recommendations |
|---|---|---

| Phase | Priority | Ranking | Repair Completion Date | 2018_Project | Contractor | Tape No. | DVD No. | Inspection No. | Reversal Tape No. | Reversal DVD No. | Reversal Inspec. No. | DVD Watched? (Y) | Location | Street Name | CCTV Date | Existing MH ID Start | Existing MH ID End | Previous MH ID Start | Previous MH ID End | Direction of Camera | Pipe Existing Sewer ID | Pipe Previous Sewer ID | Pipe Size (in) | Pipe Material | Pipe Joint Length (ft) | Pipe GIS Comment | Pipe Length (ft) | Pipe CCTV Length (ft) | Structural Defect Coding: Crack C L | C | M | S | H | Fracture F L | C | M | S | H | Broken B SV | VV | SV | Hole H VV | Joint J O S | M | L | S J M | L | A | Deformed D | V | H | Collapsed Pipe X P | Surface Damage S | Lining Failure LF | Point Repair RP | Sags WL S | PACP Quick Struct Rating | Total Structural Defects | Total Structural Defect Score | Structural Defect Index | Operational and Maintenance: Deposits AGS | AE B | AE % | AE Other L | AE Other % | AE Other Z | Roots (R) Fine (F) B | L | J | Roots (R) Tap (T) C | B | L | J | Roots (R) Medium (M) C | B | L | J | Roots (R) Ball (B) C | B | L | J | Infiltration I | Obstacles OB G | Obstacles OB D | Obstacles OB R | Obstacles Other Z | Obstacles Other % | Vermin C | Vermin R | PACP Quick Maint Rating | Total O&M Defects | Total O&M Defect Score | O&M Defect Index | Construction Features: Tap (Lateral) T FD | FL | BI | BD | Line L D | L | U | R | LD | RD | Intruding Seal Material IS SRH | SRB | SRL | Z | Miscellaneous M SA | CU | MO | Total Construction Feature | Reasons for Survey Aborted | GIS Identified Abandoned | Repair Description | Comments | Recommendations |
|---|---|---

Appendix D-3

| Phase | Priority | Ranking | Repair Completion Date | 2018_Project | General: Contractor | Tape No. | DVD No. | Inspection No. | Reversal Tape No. | Reversal DVD No. | Reversal Inspec. No. | DVD Watched? (Y) | Location: Street Name | Existing MH ID: CCTV Date | Start | End | Previous MH ID: Start | End | Direction of Camera | Pipe: Existing Sewer ID | Previous Sewer I.D. | Size (in) | Material | Joint Length (ft) | GIS Comment | Length (ft) | CCTV Length (ft) | Structural Defect Coding: Crack C | Fracture F | Broken B | Hole H | Joint J: O | Joint J: S | Deformed D | Collapsed Pipe X | Surface Damage S | Lining Failure LF | Point Repair RP | Sags WL | PACP Quick Struct Rating | Total Structural Defects | Total Structural Defect Score | Structural Defect Index | Operational and Maintenance: Deposits AGS | Deposits AE B | Deposits AE % | Deposits AE L | Deposits AE % | Deposits Other Z | Deposits Other % | Roots (R) Fine (F) B | Roots (R) Fine (F) L | Roots (R) Fine (F) J | Roots (R) Tap (T) C | Roots (R) Tap (T) B | Roots (R) Tap (T) L | Roots (R) Tap (T) J | Roots (R) Medium (M) C | Roots (R) Medium (M) B | Roots (R) Medium (M) L | Roots (R) Medium (M) J | Roots (R) Ball (B) C | Roots (R) Ball (B) B | Roots (R) Ball (B) L | Roots (R) Ball (B) J | Infiltration I | Obstacles OB | Obstacles Other C | Obstacles Other Z | Obstacles Other % | Vermin C | Vermin R | PACP Quick Maint Rating | Total O&M Defects | Total O&M Defect Score | O&M Defect Index | Construction Features: Tap (Lateral) T FD | T FL | T BI | T BD | Line L D | L L | L U | L R | L LD | Intruding Seal Material IS RD | IS SRH | IS SRB | IS SRL | IS Z | Miscellaneous M SA | M CU | M MC | Total Construction Feature | Reasons for Survey Aband. | GIS Identified Abandoned | Repair Description | Comments | Recommendations |
|---|---|---

Appendix D-3

| Phase | Priority | Ranking | Repair Completion Date | 2018_Project | Contractor | Tape No. | DVD No. | Inspection No. | Reversal Tape No. | Reversal DVD No. | Reversal Inspec. No. | DVD Watched? (Y) | Location | Street Name | CCTV Date | Existing MH ID Start | Existing MH ID End | Previous MH ID Start | Previous MH ID End | Direction of Camera | Pipe Existing Sewer ID | Pipe Previous Sewer I.D. | Pipe Size (in) | Pipe Material | Pipe Joint Length (ft) | Pipe GIS Comment | Pipe Length (ft) | Pipe CCTV Length (ft) | Structural Defect Coding: Crack L | Crack C | Crack M | Crack S | Crack H | Fracture L | Fracture C | Fracture M | Fracture S | Fracture H | Broken B | Broken SV | Hole H | Hole VV | Hole SV | Hole VV | Joint O | Joint S | Joint M | Joint L | Joint S | Joint M | Joint L | Joint A | Deformed D | Collapsed Pipe V | Collapsed Pipe H | Collapsed Pipe P | Surface Damage S | Lining Failure LF | Point Repair RP | Sags S | WL | PACP Quick Struct Rating | Total Structural Defects | Total Structural Defect Score | Structural Defect Index | Deposits AGS | Deposits AE B | Deposits AE % | Deposits AE L | Deposits AE % | Deposits Other Z | Deposits Other % | Roots (R) Fine (F) B | Roots (R) Fine (F) L | Roots (R) Fine (F) J | Roots (R) Tap (T) C | Roots (R) Tap (T) B | Roots (R) Tap (T) L | Roots (R) Tap (T) J | Roots (R) Tap (T) C | Roots (R) Medium (M) B | Roots (R) Medium (M) L | Roots (R) Medium (M) J | Roots (R) Medium (M) C | Roots (R) Ball (B) B | Roots (R) Ball (B) L | Roots (R) Ball (B) J | Roots (R) Ball (B) C | Infiltration I | Obstacles OB | Obstacles Other C | Obstacles Other Z | Obstacles Other % | Vermin C | Vermin R | PACP Quick Maint Rating | Total O&M Defects | Total O&M Defect Score | O&M Defect Index | Construction Features Tap (Lateral) T FD | T FL | T BI | T BD | Line D | Line L | Line U | Line R | Intruding Seal Material LD | Intruding Seal Material RD | Intruding Seal Material SRH | Intruding Seal Material SRB | Intruding Seal Material SRL | Intruding Seal Material Z | Miscellaneous SA | Miscellaneous CU | Miscellaneous MC | Total Construction Feature | Reasons for Survey Aband | GIS Identified Abandoned | Repair Description | Comments | Recommendations |
|---|---|---

Appendix D-3

| Phase | Priority | Ranking | Repair Completion Date | 2018_Project | General | | | | | | | | | | | | | | | | | | | | Structural Defect Coding | | | | | | | | | | | | | | | | | | |

Appendix D-3

| Phase | Priority | Ranking | Repair Completion Date | 2018_Project | Contractor | Tape No. | DVD No. | Inspection No. | Reversal Tape No. | Reversal DVD No. | Reversal Inspec. No. | DVD Watched? (Y) | Location | Street Name | CCTV Date | Existing MH ID Start | Existing MH ID End | Previous MH ID Start | Previous MH ID End | Direction of Camera | Existing Sewer ID | Previous Sewer ID | Size (in) | Material | Joint Length (ft) | GIS Comment | Length (ft) | CCTV Length (ft) | Crack L | Crack C | Crack M | Crack S | Crack H | Fracture L | Fracture C | Fracture M | Fracture S | Fracture H | Broken B | Broken SV | Broken VV | Hole H | Joint SV | Joint VV | Joint O | Joint S | Joint M | Joint L | Joint S | Joint M | Joint L | Joint A | Deformed D | Collapsed Pipe V | Collapsed Pipe H | Collapsed Pipe P | Surface Damage S | Lining Failure LF | Point Repair RP | Sags S | Sags WL | PACP Quick Struct Rating | Total Structural Defects | Total Structural Defect Score | Structural Defect Index | Deposits AGS | Deposits AE B | Deposits AE % | Deposits AE L | Deposits AE % | Deposits Other Z | Deposits Other % | Roots (R) Fine (F) B | Roots (R) Fine (F) L | Roots (R) Fine (F) J | Roots (R) Tap (T) C | Roots (R) Tap (T) B | Roots (R) Tap (T) L | Roots (R) Tap (T) J | Roots (R) Medium (M) C | Roots (R) Medium (M) B | Roots (R) Medium (M) L | Roots (R) Medium (M) J | Roots (R) Ball (B) C | Roots (R) Ball (B) B | Roots (R) Ball (B) L | Roots (R) Ball (B) J | Roots (R) Ball (B) C | Infiltration I | Obstacles OB | Obstacles Other | Obstacles Z | Obstacles % | Vermin C | Vermin R | PACP Quick Maint Rating | Total O&M Defects | Total O&M Defect Score | O&M Defect Index | Tap (Lateral) T FD | Tap (Lateral) T FL | Tap (Lateral) T BI | Tap (Lateral) T BD | Line L D | Line L U | Line L R | Line L LD | Intruding Seal Material IS RD | Intruding Seal Material IS SRH | Intruding Seal Material IS SRB | Intruding Seal Material IS SRL | Intruding Seal Material IS Z | Miscellaneous M SA | Miscellaneous M CU | Miscellaneous M MC | Total Construction Features | Reasons for Survey Aband | GIS Identified Abandoned | Repair Description | Comments | Recommendations |
|---|---|---

Appendix D-3

| Phase | Priority | Ranking | Repair Completion Date | 2018_Project | General: Contractor | Tape No. | DVD No. | Inspection No. | Reversal Tape No. | Reversal DVD No. | Reversal Inspec. No. | DVD Watched? (Y) | Location: Street Name | CCTV Date | Existing MH ID: Start | Existing MH ID: End | Previous MH ID: Start | Previous MH ID: End | Direction of Camera | Pipe: Existing Sewer ID | Pipe: Previous Sewer ID | Pipe: Size (in) | Pipe: Material | Pipe: Joint Length (ft) | Pipe: GIS Comment | Pipe: Length (ft) | Pipe: CCTV Length (ft) | Structural Defect Coding: Crack C L | C | M | S | H | Fracture F L | C | M | S | H | Broken B SV | Hole H VV | SV | VV | Joint O S | M | L | S M | L | A | V | H | P | Deformed D | Collapsed/ Pipe X | Surface Damage S | Lining Failure LF | Point Repair RP | Sags WL | PACP Quick Struct Rating | Total Structural Defects | Total Structural Defect Score | Structural Defect Index | Operational and Maintenance: Deposits AGS | AE B | AE % | AE L | AE % | Other Z | Other % | Roots (R) Fine (F) B | L | J | C | Tap (T) B | L | J | C | Medium (M) B | L | J | C | Ball (B) B | L | J | C | Infiltration I | Obstacles OB | Vermin V | PACP Quick Maint Rating | Total O&M Defects | Total O&M Defect Score | O&M Defect Index | Construction Features: Tap (Lateral) T FD | FL | BI | BD | Line L D | L | U | R | LD | RD | Intruding Seal Material IS SRH | SRB | SRL | Z | Miscellaneous M SA | CU | MC | Total Construction Feature | Reasons for Survey Aband | GIS Identified Abandoned | Repair Description | Comments | Recommendations |
|---|---|---

Appendix D-3

| Phase | Priority | Ranking | Repair Completion Date | 2018_Project | Contractor | Tape No. | DVD No. | Inspection No. | Reversal Tape No. | Reversal DVD No. | Reversal Inspec. No. | DVD Watched? (Y) | Location | Street Name | CCTV Date | Existing MH ID Start | Existing MH ID End | Previous MH ID Start | Previous MH ID End | Direction of Camera | Pipe Existing Sewer ID | Pipe Previous Sewer ID | Pipe Size (in) | Pipe Material | Pipe Joint Length (ft) | GIS Comment | Length (ft) | CCTV Length (ft) | Crack C L | Crack C C | Crack C M | Crack C S | Crack C H | Fracture F L | Fracture F C | Fracture F M | Fracture F S | Fracture F H | Broken B SV | Hole H VV | Hole H SV | Hole H VV | Joint J O S | Joint J O M | Joint J O L | Joint J S S | Joint J S M | Joint J S L | Joint J A | Deformed D | Collapsed Pipe X | Surface Damage S | Lining Failure LF | Point Repair RP | Sags S | WL | PACP Quick Struct Rating | Total Structural Defects | Total Structural Defect Score | Structural Defect Index | Operational and Maintenance: Deposits AGS | Deposits AE B | Deposits AE % | Deposits AE L | Deposits AE % | Deposits Other Z | Deposits Other % | Roots (R) Fine (F) B | Roots (R) Fine (F) L | Roots (R) Fine (F) J | Roots (R) Tap (T) C | Roots (R) Tap (T) B | Roots (R) Tap (T) L | Roots (R) Tap (T) J | Roots (R) Medium (M) C | Roots (R) Medium (M) B | Roots (R) Medium (M) L | Roots (R) Medium (M) J | Roots (R) Ball (B) C | Roots (R) Ball (B) B | Roots (R) Ball (B) L | Roots (R) Ball (B) J | Infiltration I C | Infiltration I G | Infiltration I D | Infiltration I R | Infiltration I W | Obstacles O B | Obstacles O C | Obstacles O Z | Obstacles Other % | Vermin V C | Vermin V R | PACP Quick Maint Rating | Total O&M Defects | Total O&M Defect Score | O&M Defect Index | Construction Features: Tap (Lateral) T FD | T FL | T BI | T BD | Line L D | L L | L U | L R | Intruding Seal Material IS LD | IS RD | IS SRH | IS SRB | IS SRL | IS Z | Miscellaneous M SA | M CU | M MC | Total Construction Feature | Reasons for Survey Aborted | GIS Identified Abandoned | Repair Description | Comments | Recommendations |
|---|---|---

Appendix D-3

| Phase | Priority | Ranking | Repair Completion Date | 2018_Project | Contractor | Tape No. | DVD No. | Inspection No. | Reversal Tape No. | Reversal DVD No. | Reversal Inspec. No. | DVD Watched? (Y) | Location | Street Name | CCTV Date | Existing MH ID Start | Existing MH ID End | Previous MH ID Start | Previous MH ID End | Direction of Camera | Pipe: Existing Sewer ID | Pipe: Previous Sewer ID | Pipe: Size (in) | Pipe: Material | Pipe: Joint Length (ft) | Pipe: GIS Comment | Length (ft) | CCTV Length (ft) | Structural Defect Coding: Crack C L | Crack C C | Crack C M | Crack C S | Crack C H | Fracture F L | Fracture F C | Fracture F M | Fracture F S | Fracture F H | Broken B SV | Hole H VV | Hole H SV | Hole H VV | Joint O S | Joint J M | Joint J L | Joint J S | Joint J M | Joint J L | Joint S A | Deformed D | Collapsed Pipe X | Surface Damage S | Lining Failure LF | Point Repair RP | Sags WL | Sags S | PACP Quick Struct Rating | Total Structural Defects | Total Structural Defect Score | Structural Defect Index | Operational and Maintenance: Deposits AGS | Deposits AE B | Deposits AE % | Deposits AE L | Deposits AE % | Deposits Other Z | Deposits Other % | Roots (R) Fine (F) B | Roots (R) Fine (F) L | Roots (R) Fine (F) J | Roots (R) Tap (T) C | Roots (R) Tap (T) B | Roots (R) Tap (T) L | Roots (R) Tap (T) J | Roots (R) Tap (T) C | Roots (R) Medium (M) B | Roots (R) Medium (M) L | Roots (R) Medium (M) J | Roots (R) Medium (M) C | Roots (R) Ball (B) B | Roots (R) Ball (B) L | Roots (R) Ball (B) J | Roots (R) Ball (B) C | Infiltration I G | Infiltration I D | Infiltration I R | Infiltration I W | Obstacles OB C | Obstacles OB Z | Obstacles OB Other % | Vermin V C | Vermin V R | PACP Quick Maint Rating | Total O&M Defects | Total O&M Defect Score | O&M Defect Index | Construction Features: Tap (Lateral) T FD | Tap (Lateral) T FL | Tap (Lateral) T BI | Tap (Lateral) T BD | Line L D | Line L L | Line L U | Line L R | Intruding Seal Material IS LD | Intruding Seal Material IS RD | Intruding Seal Material IS SRH | Intruding Seal Material IS SRB | Intruding Seal Material IS SRL | Intruding Seal Material IS Z | Miscellaneous M SA | Miscellaneous M CU | Miscellaneous M MC | Total Construction Feature | Reasons for Survey Aband | GIS Identified Abandoned | Repair Description | Comments | Recommendations |
|---|---|---

Appendix D-3

| Phase | Priority | Ranking | Repair Completion Date | 2018_Project | Contractor | Tape No. | DVD No. | Inspection No. | Reversal Tape No. | Reversal DVD No. | Reversal Inspec. No. | DVD Watched? (Y) | Location | Street Name | CCTV Date | Existing MH ID Start | Existing MH ID End | Previous MH ID Start | Previous MH ID End | Direction of Camera | Existing Sewer ID | Previous Sewer ID | Size (in) | Material | Joint Length (ft) | GIS Comment | Length (ft) | CCTV Length (ft) | Crack L | Crack C | Crack M | Crack S | Crack H | Fracture L | Fracture C | Fracture M | Fracture S | Fracture H | Broken S | Hole SV | Hole VV | Hole SV | Hole VV | Joint O S | Joint O M | Joint O L | Joint S M | Joint S L | Joint A | Joint V | Joint H | Joint P | Deformed D | Collapsed Pipe X | Surface Damage S | Lining Failure LF | Point Repair RP | Sags S | WL | PACP Quick Struct Rating | Total Structural Defects | Total Structural Defect Score | Structural Defect Index | AGS | Deposits AE B | Deposits AE % | Deposits AE L | Deposits AE % | Deposits Other Z | Deposits Other % | Roots (R) Fine (F) B | Roots (R) Fine (F) L | Roots (R) Fine (F) J | Roots (R) Tap (T) C | Roots (R) Tap (T) B | Roots (R) Tap (T) L | Roots (R) Tap (T) J | Roots (R) Medium (M) C | Roots (R) Medium (M) B | Roots (R) Medium (M) L | Roots (R) Medium (M) J | Roots (R) Ball (B) C | Roots (R) Ball (B) B | Roots (R) Ball (B) L | Roots (R) Ball (B) J | Infiltration I | Obstacles OB Other G | Obstacles OB Other D | Obstacles OB Other R | Obstacles OB Other W | Obstacles OB Other C | Obstacles OB Other Z | Obstacles OB Other % | Vermin C | Vermin R | PACP Quick Maint Rating | Total O&M Defects | Total O&M Defect Score | O&M Defect Index | Tap (Lateral) T FD | Tap (Lateral) T FL | Tap (Lateral) T BI | Tap (Lateral) T BD | Line D | Line L | Line U | Line R | Line LD | Line RD | Intruding Seal Material IS SRH | Intruding Seal Material IS SRB | Intruding Seal Material IS SRL | Intruding Seal Material IS Z | Miscellaneous M SA | Miscellaneous M CU | Miscellaneous M MC | Total Construction Feature | Reasons for Survey Aband | GIS Identified Abandoned | Repair Description | Comments | Recommendations |
|---|---|---

Appendix D-3

| Phase | Priority | Ranking | Repair Completion Date | 2018_Project | Contractor | Tape No. | DVD No. | Inspection No. | Reversal Tape No. | Reversal DVD No. | Reversal Inspec. No. | DVD Watched? (Y) | Location | | Existing MH ID | | Previous MH ID | | Direction of Camera | Pipe | | |

Appendix D-3

| Phase | Priority | Ranking | Repair Completion Date | 2018_Project | Contractor | Tape No. | DVD No. | Inspection No. | Reversal Tape No. | Reversal DVD No. | Reversal Inspec. No. | DVD Watched? (Y) | Location | Street Name | CCTV Date | Existing MH ID Start | Existing MH ID End | Previous MH ID Start | Previous MH ID End | Direction of Camera | Existing Sewer ID | Previous Sewer ID | Pipe Size (in) | Pipe Material | Pipe Joint Length (ft) | Pipe GIS Comment | Pipe Length (ft) | CCTV Length (ft) | Crack L | Crack C | Crack M | Crack S | Crack H | Fracture L | Fracture C | Fracture M | Fracture S | Fracture H | Broken SB | Broken SV | Hole HV | Hole SV | Hole VV | Joint OS | Joint OM | Joint OL | Joint SS | Joint SM | Joint SL | Joint A | Deformed D | Deformed X | Collapsed/ Pipe V | Collapsed/ Pipe H | Collapsed/ Pipe P | Surface Damage S | Lining Failure LF | Point Repair RP | Sags S | Sags WL | PACP Quick Struct Rating | Total Structural Defects | Total Structural Defect Score | Structural Defect Index | AGS | Deposits AE B | Deposits AE % | Deposits AE L | Deposits AE % | Deposits Other Z | Deposits Other % | Roots (R) Fine (F) B | Roots (R) Fine (F) L | Roots (R) Fine (F) J | Roots (R) Tap (T) C | Roots (R) Tap (T) B | Roots (R) Tap (T) L | Roots (R) Tap (T) J | Roots (R) Tap (T) C | Roots (R) Medium (M) B | Roots (R) Medium (M) L | Roots (R) Medium (M) J | Roots (R) Medium (M) C | Roots (R) Ball (B) B | Roots (R) Ball (B) L | Roots (R) Ball (B) J | Roots (R) Ball (B) C | Infiltration I G | Infiltration I D | Infiltration I R | Infiltration I W | Obstacles OB C | Obstacles OB Z | Obstacles OB Other % | Vermin V C | Vermin V R | PACP Quick Maint Rating | Total O&M Defects | Total O&M Defect Score | O&M Defect Index | Tap (Lateral) T FD | Line L FL | Line L BI | Line L BD | Line L D | Line L L | Line L U | Intruding Seal Material IS R | Intruding Seal Material IS LD | Intruding Seal Material IS RD | Intruding Seal Material IS SRH | Intruding Seal Material IS SRB | Intruding Seal Material IS SRL | Intruding Seal Material IS Z | Miscellaneous M SA | Miscellaneous M CU | Miscellaneous M MC | Total Construction Feature | Reasons for Survey Aborted | GIS Identified Abandoned | Repair Description | Comments | Recommendations |
|---|---|---

Appendix D-3

| Phase | Priority | Ranking | Repair Completion Date | | 2018_Project | General | | | | | | | | | | Existing MH ID | | Previous MH ID | | Direction of Camera | Pipe | | | | | Structural Defect Coding | | | | | | | | | |

Appendix D-3

| Phase | Priority | Ranking | Repair Completion Date | 2018_Project | Contractor | Tape No. | DVD No. | Inspection No. | Reversal Tape No. | Reversal DVD No. | Reversal Inspec. No. | DVD Watched? (Y) | Location | Street Name | CCTV Date | Existing MH ID Start | Existing MH ID End | Previous MH ID Start | Previous MH ID End | Direction of Camera | Pipe Existing Sewer ID | Pipe Previous Sewer ID | Pipe Size (in) | Pipe Material | Pipe Joint Length (ft) | Pipe GIS Comment | Length (ft) | CCTV Length (ft) | Structural Defect Coding: Crack C | Fracture F | Broken B | Hole H | Joint J | Deformed D | Collapsed Pipe X | Surface Damage S | Lining Failure LF | Point Repair RP | Sags WL | PACP Quick Struct Rating | Total Structural Defects | Total Structural Defect Score | Structural Defect Index | Operational and Maintenance: Deposits AGS | Deposits AE B | Deposits AE % | Deposits AE L | Deposits AE % | Deposits Other D | Deposits Other Z | Deposits Other % | Roots (R) Fine (F) B | Roots (R) Fine (F) L | Roots (R) Fine (F) J | Roots (R) Tap (T) C | Roots (R) Tap (T) B | Roots (R) Tap (T) L | Roots (R) Tap (T) J | Roots (R) Medium (M) C | Roots (R) Medium (M) B | Roots (R) Medium (M) L | Roots (R) Medium (M) J | Roots (R) Ball (B) C | Roots (R) Ball (B) B | Roots (R) Ball (B) L | Roots (R) Ball (B) J | Infiltration I C | Infiltration I G | Infiltration I D | Infiltration I R | Infiltration I W | Obstacles OB C | Obstacles OB Z | Obstacles OB % | Vermin V C | Vermin V R | PACP Quick Maint Rating | Total O&M Defects | Total O&M Defect Score | O&M Defect Index | Construction Features: Tap (Lateral) T FD | Tap (Lateral) T FL | Tap (Lateral) T BI | Tap (Lateral) T BD | Line L D | Line L L | Line L U | Line L R | Intruding Seal Material IS LD | Intruding Seal Material IS RD | Intruding Seal Material IS SRH | Intruding Seal Material IS SRB | Intruding Seal Material IS SRL | Intruding Seal Material IS Z | Miscellaneous M SA | Miscellaneous M CU | Miscellaneous M MC | Total Construction Feature | Reasons for Survey Aborted | GIS Identified Abandoned | Repair Description | Comments | Recommendations |
|---|---|---

Appendix D-3

Phase	Priority	Ranking	Repair Completion Date	2018_Project	Contractor	Tape No.	DVD No.	Inspection No.	Reversal Tape No.	Reversal DVD No.	Reversal Inspec. No.	DVD Watched? (Y)	Location	Street Name	CCTV Date	Existing MH ID Start	Existing MH ID End	Previous MH ID Start	Previous MH ID End	Direction of Camera	Pipe Existing Sewer ID	Pipe Previous Sewer I.D.	Pipe Size (in)	Pipe Material	Pipe Joint Length (ft)	GIS Comment	Length (ft)	CCTV Length (ft)
2	4_Minor	896					M002	11					OMA PL		8/5/2005	10164	9672	MHL060009	COL060001	U/S	3723	SPL060010	8	VCP			106	96.0
2	4_Minor	897					M002	14				Y	OMA PL		8/5/2005	10166	10168	MHL060011	MHL060013	D/S	3728	SPL060015	8	VCP			279	279.8
2	4_Minor	898					M018	1					SAFFORD ST		9/12/2005	12487	12488	MHQ120020	MHQ120021	D/S	5592	SPQ120011	6	VCP			190	185.7
2	4_Minor	899					M011	3					ROBERT LN		8/25/2005	13133	13134	MHQ080035	MHQ080036	D/S	5843	SPQ080043	8	VCP			231	231.1
2	4_Minor	901					S003	8					DUNKLEE AV		10/12/2005	12411	12412	MHT120016	MHT120017	D/S	3991	SPT120016	8	VCP			292	288.7
2	4_Minor	902					R002	10				Y	TRISTAN DR	SANDALWOOD CR	7/26/2005	10794	10796	MHL080022	MHL080024	D/S	4337	SPL080022	8	VCP			320	322.6
2	4_Minor	903					S001	6					SORELL DR		10/10/2005	12109	12110	MHS110025	MHS110026	D/S	5707	SPS110025	8	VCP			255	250.5
2	4_Minor	904					R053	2					HARBOR BLVD		11/4/2005	11987	11986	MHR140031	MHR140030	U/S	3867	SPR140033	8	VCP			390	380.6
2	4_Minor	905					R068	6				Y	JOYZELLE AV		12/9/2005	13241	13242	MHR140037	MHR140038	D/S	6400	SPR140040	10	VCP			327	329.0
2	4_Minor	906					M001	14				Y	CERRITOS		8/4/2005	10860	10193	MHK060031	MHK060032	D/S	5930	SPK060023	8	VCP			280	275.8
4	5_O&M	234					P COU NTY	8				Y	CERRITOS		10/10/2007	9212	9213	MHM030036	MHM030039	D/S	4517	SPM030007	8	VCP			320	958.8
4	5_O&M	235					P COU NTY	8				Y	CERRITOS		10/10/2007	9213	9214	MHM030036	MHM030039	D/S	4518	SPM030008	8	VCP			320	958.8
4	5_O&M	236					P COU NTY	8				Y	CERRITOS		10/10/2007	9214	9215	MHM030036	MHM030039	D/S	4519	SPM030009	8	VCP			175	958.8
4	5_O&M	237					P COU NTY 3B	5				Y	CERRITOS		10/17/2007	8938	8939	MHM030044	MHL030040	D/S	3652	SPM030033	8	VCP			115	427.9
4	5_O&M	238					P COU NTY 3B	5				Y	CERRITOS		10/17/2007	8939	9343	MHM030044	MHL030040	D/S	3653	SPL030002	8	VCP			330	427.9
4	5_O&M	239					MIXE D P COU NTY 2	8				Y	CERRITOS		10/10/2007	9216	9217	MHM030039	MHM030041	D/S	3585	SPM030011	8	VCP			130	275.6
4	5_O&M	240					MIXE D P COU NTY 2	8				Y	CERRITOS		10/10/2007	9215	9216	MHM030039	MHM030041	D/S	4520	SPM030010	8	VCP			144	275.6
4	5_O&M	241					P COU NTY 3C	1				Y	CERRITOS		10/17/2007	8937	8938	MHM030043	MHM030044	D/S	3651	SPM030032	8	VCP			215	220.0
4	5_O&M	242					P COU NTY 3C	1				Y	CERRITOS		10/17/2007	9217	8936	MHM030041	MHM030042	D/S	5411	SPM030041	8	VCP			200	198.4
4	5_O&M	243					MIXE D P COU NTY 2	5				Y	BANTA		11/3/2007	8964	8971	MHL040006	MHM040013	U/S	4411	SPM040037	8	VCP			272	272.9
4	5_O&M	244					S	2306				Y	HARRIET LN		9/11/2006	9352	9351	MHM020017	MHM020016	U/S	3491	SPM020037	8	VCP			69	66.4
4	5_O&M	245					P COU NTY 3B	7				Y	JEAN		10/17/2007	8351	8349	MHM040026	MHM040020	D/S	4422	SPM040048	8	VCP			30	31.9
4	5_O&M	246					P COU NTY	13				Y	RANDOM		10/9/2007	9288	9117	MHM990016	COM990002	U/S	4254	SPM990019	8 & 6	VCP			80	83.1
3	5_O&M	373			GGSD		S	29	1022				SANTA CATALINA		1/18/2005	7837	7964	MHD080001	MHD080002	D/S	1943	SPD080025	8	VCP			298	297
3	5_O&M	374			GGSD		S	29	1021				SANTA CATALINA		1/18/2005	7965	7964	MHD080003	MHD080002	U/S	1591	SPD080005	8	VCP			298	295
3	5_O&M	375			GGSD		S	30	1044			Y	BARTLETT		1/31/2005	7967	7963	MHD080005	MHD070001	U/S	1590	SPD080004	8	VCP			119	116
3	5_O&M	376			GGSD		MIXE D 1	1024					SANTA BARBARA		1/9/2005	7841	7840	MHD080006	MHE080027	U/S	1451	SPD080003	8	VCP			299	294
3	5_O&M	377			GGSD		S	30	1044			Y	BARTLETT		1/31/2005	8612	7967	MHD080010	MHD080005	U/S	1594	SPD080008	8	VCP			308	307
3	5_O&M	378			GGSD		S	30	1037			Y	SANTA MONICA		1/27/2005	8615	8616	MHD080014	MHD080015	U/S	1599	SPD080015	8	VCP			344	341
3	5_O&M	379			GGSD		S	30	1038			Y	SANTA MONICA		1/27/2005	8616	8617	MHD080015	MHD080016	U/S	1600	SPD080016	8	VCP			344	338
3	5_O&M	380			GGSD		S	30	1042			Y	SANTA RITA		1/31/2005	7845	7844	MHD080017	MHE080029	D/S	1453	SPE080037	8	VCP			269	266
3	5_O&M	381			GGSD		S	30	1039			Y	SANTA RITA		1/29/2005	8618	8619	MHD080019	MHD080018	U/S	1602	SPD080018	8	VCP			372	368
3	5_O&M	382			GGSD		S	30	1043			Y	MANLEY		1/31/2005	8620	8617	MHD080020	MHD080016	U/S	1601	SPD080017	8	VCP			258	257
3	5_O&M	383			GGSD		S	31	1052			Y	HOLLAND		2/7/2005	7847	8625	MHD090001	MHD090002	U/S	1948	SPD090023	8	VCP			350	348
3	5_O&M	384			GGSD		S	31	1052			Y	HOLLAND		2/7/2005	8625	8626	MHD090002	MHD090003	U/S	1608	SPD090002	8	VCP			350	349
3	5_O&M	385			GGSD		S	31	1046			Y	HOLLAND		2/2/2005	8628	8627	MHD090005	MHD090004	U/S	1610	SPD090004	10	VCP			300	297
3	5_O&M	386			GGSD		S	31	1054			Y	VANGUARD		2/8/2005	8629	8630	MHD090007	MHD090008	U/S	1611	SPD090006	8	VCP			333	332
3	5_O&M	387			GGSD		S	31	1061			Y	VANGUARD		2/9/2005	8630	8631	MHD090009	MHD090008	D/S	1612	SPD090007	8	VCP			333	328
3	5_O&M	388			GGSD		S	32	1062			Y	MANLEY		2/9/2005	8631	8632	MHD090009	MHD090010	D/S	1923	SPD090008	8	VCP			259	254
3	5_O&M	389			GGSD		S	32	1074			Y	BELGRAVE		2/17/2005	8637	8644	MHD090015	MHD090023	D/S	1712	SPD090014	12	VCP			256	254
3	5_O&M	390			GGSD		S	32	1082			Y	AMY		3/7/2005	8638	8639	MHD090016	MHD090017	U/S	1927	SPD090015	8	VCP			290	288
3	5_O&M	391			GGSD		S	32	1082			Y	AMY		3/7/2005	8640	8639	MHD090017	MHD090018	U/S	1928	SPD090016	8	VCP			290	287
3	5_O&M	392			GGSD		S	32	1081			Y	LAURELTON		3/3/2005	8641	8642	MHD090020	MHD090021	U/S	1930	SPD090018	8	VCP			243	239
3	5_O&M	393			GGSD		S	32	1081			Y	LAURELTON		3/3/2005	8642	8643	MHD090021	MHD090022	U/S	1931	SPD090019	8	VCP			243	240
3	5_O&M	394			GGSD		S	32	1079			Y	CASPER		3/3/2005	8643	8640	MHD090022	MHD090018	U/S	1929	SPD090017	8	VCP			258	257
3	5_O&M	395			GGSD		S	32	1079			Y	CASPER		3/3/2005	8644	8643	MHD090023	MHD090022	U/S	1932	SPD090020	8	VCP			260	258
3	5_O&M	396			GGSD		S	32	1084			Y	BELGRAVE		3/7/2005	8645	8646	MHD090024	MHD090025	D/S	1714	SPD090022	10	VCP			350	349
3	5_O&M	397			GGSD		S	32	1084			Y	BELGRAVE		3/7/2005	8646	7856	MHD090025	MHD090029	D/S	1716	SPD090027	10	VCP			350	348
3	5_O&M	398			GGSD		S	33	1090			Y	AMY		3/24/2005	7853	8638	MHD090027	MHD090016	U/S	1950	SPD090025	8	VCP			370	350
3	5_O&M	399			GGSD		S	35	1147				HUNTLEY		4/27/2005	7798	7832	MHD100004	MHE100001	U/S	1421	SPE100040	8	VCP			370	369
3	5_O&M	400			GGSD		S	35	1147				HUNTLEY		4/27/2005	7905	7798	MHD100005	MHD100004	U/S	1934	SPD100025	8	VCP			370	365
3	5_O&M	401			GGSD		S	36	1161			Y	CASPER		5/8/2005	7908	7907	MHD100008	MHD100007	U/S	1543	SPD100006	8	VCP			305	304
3	5_O&M	402			GGSD		S	36	1157			Y	EDEN CIR		5/4/2005	7909	7910	MHD100009	MHD100010	D/S	1545	SPD100008	8	VCP			92	88
3	5_O&M	403			GGSD		S	36	1156			Y	LUDLOW		5/3/2005	7910	7912	MHD100010	MHD100012	D/S	1546	SPD100009	8	VCP			278	276
3	5_O&M	404			GGSD		S	36	1152			Y	LUDLOW		5/3/2005	7910	7799	MHD100010	MHE100004	U/S	1935	SPD100026	8	VCP			346	343
3	5_O&M	405			GGSD		S	36	1158			Y	HELENE CIR		5/4/2005	7912	7911	MHD100012	MHD100011	U/S	1547	SPD100010	8	VCP			198	197
3	5_O&M	406			GGSD		S	36	1156			Y	LUDLOW		5/3/2005	7912	7914	MHD100012	MHD100014	D/S	1548	SPD100011	8	VCP			266	265
3	5_O&M	407			GGSD		S	36	1159			Y	VERA CIR		5/4/2005	7914	7913	MHD100014	MHD100013	U/S	1558	SPD100012	8	VCP			309	305
3	5_O&M	408			GGSD		S	36	1161			Y	CASPER		5/8/2005	7915	7908	MHD100015	MHD100008	U/S	1544	SPD100007	8	VCP			304	300
3	5_O&M	409			GGSD		S	36	1160			Y	LUDLOW		5/3/2005	7915	7914	MHD100015	MHD100014	U/S	1559	SPD100013	8	VCP			139	168
3	5_O&M	410			GGSD		S	36	1171			Y	CASPER		5/12/2005	7916	7915	MHD100016	MHD100015	U/S	1560	SPD100014	8	VCP			255	255
3	5_O&M	411			GGSD		S	36	1171			Y	CASPER		5/12/2005	7917	7916	MHD100017	MHD100016	U/S	1561	SPD100015	8	VCP			102	99
3	5_O&M	412			GGSD		S	38	1361				CERULEAN		6/7/2005	7807	7928	MHD100025	MHD110004	D/S	1937	SPD100028	8	VCP			299	299
3	5_O&M	413			GGSD		PS A	3					MANLEY		11/29/2007	7926	7927	MHD110002	MHD110003	D/S	1754	SPD110004	10	VCP			218	216
3	5_O&M	414			GGSD		S	37	1196				CERULEAN		6/1/2005	7930	7929	MHD110006	MHD110005	U/S	1567	SPD110007	8	VCP			350	347
3	5_O&M	415			GGSD		S	37	1197				CASPER		6/2/2005	7931	7930	MHD110007	MHD110006	U/S	1568	SPD110008	8	VCP			205	204
3	5_O&M	416			GGSD		S	37	1352				STANFORD		6/6/2005	7933	7932	MHD110010	MHD110009	U/S	1570	SPD110010	8	VCP			350	346
3	5_O&M	417			GGSD		S	37	1197				CASPER		6/2/2005	7935	7931	MHD110012	MHD110007	U/S	1569	SPD110009	8	VCP			203	201
3	5_O&M	418			GGSD		S	38	1355				STANFORD		6/7/2005	7935	7936	MHD110012	MHD110013	D/S	1573	SPD110013	8	VCP			256	253
3	5_O&M	419			GGSD		S	38	1355				STANFORD		6/7/2005	7936	8667	MHD110013	MHD110015	D/S	1756	SPD110014	8	VCP			302	300
3	5_O&M	420			GGSD		S	39	1383				BARTLETT		6/21/2005	8667	7937	MHD110014	MHD110015	U/S	1574	SPD110015	8	VCP			260	258
3	5_O&M	421			GGSD		S	39	1383				BARTLETT		6/22/2005	8660	8667	MHD110015	MHD110022	U/S	1763	SPD110030	8	VCP			262	261
3	5_O&M	422			GGSD		S	38	1370				PARK		6/8/2005	7941	7940	MHD110020	MHD110019	U/S	1576	SPD110018	8	VCP			256	254

Phase	Priority	Ranking	Repair Completion Date	2018_Project	Direction of Camera	Structural Defect Coding: Crack C	Crack M	Crack S	Crack H	Fracture L	Fracture C	Fracture M	Fracture S	Fracture H	Broken B	Broken SV	Broken VV	Hole H	Hole SV	Hole VV	Joint O	Joint S	Joint M	Joint L	Joint S	Joint M	Joint L	Joint A	Deformed D	Deformed V	Collapsed Pipe X	Collapsed Pipe H	Collapsed Pipe P	Surface Damage S	Lining Failure LF	Point Repair RP	Sags S	Sags WL	PACP Quick Struct Rating	Total Structural Defects	Total Structural Defect Score	Structural Defect Index
2	4_Minor	896				1																																1	1		
2	4_Minor	897				1																																1	1		
2	4_Minor	898				1																																1	1		
2	4_Minor	899				1																																1	1		
2	4_Minor	901				1																																1	1		
2	4_Minor	902				1																																1	1		
2	4_Minor	903				1																																1	1		
2	4_Minor	904				1																																1	1		
2	4_Minor	905				1																																1	1		
2	4_Minor	906				1															1																	1	1		
4	5_O&M	234																																				0	0		
4	5_O&M	235																																				0	0		
4	5_O&M	236																																				0	0		
4	5_O&M	237																																				0	0		
4	5_O&M	238																																				0	0		
4	5_O&M	239																																				0	0		
4	5_O&M	240																																				0	0		
4	5_O&M	241																																				0	0		
4	5_O&M	242																																				0	0		
4	5_O&M	243																																				0	0		
4	5_O&M	244																																				0	0		
4	5_O&M	245																																				0	0		
4	5_O&M	246																																				0	0		
3	5_O&M	373																																				0	0	0.00	
3	5_O&M	374																																				0	0	0.00	
3	5_O&M	375																																				0	0	0.00	
3	5_O&M	376																																				0	0	0.00	
3	5_O&M	377																																				0	0	0.00	
3	5_O&M	378																																				0	0	0.00	
3	5_O&M	379																																				0	0	0.00	
3	5_O&M	380																																				0	0	0.00	
3	5_O&M	381																																				0	0	0.00	
3	5_O&M	382																																				0	0	0.00	
3	5_O&M	383																																				0	0	0.00	
3	5_O&M	384																																				0	0	0.00	
3	5_O&M	385																																				0	0	0.00	
3	5_O&M	386																																				0	0	0.00	
3	5_O&M	387																																				0	0	0.00	
3	5_O&M	388																																				0	0	0.00	
3	5_O&M	389																																				0	0	0.00	
3	5_O&M	390																																				0	0	0.00	
3	5_O&M	391																																				0	0	0.00	
3	5_O&M	392																																				0	0	0.00	
3	5_O&M	393																																				0	0	0.00	
3	5_O&M	394																																				0	0	0.00	
3	5_O&M	395																																				0	0	0.00	
3	5_O&M	396																																				0	0	0.00	
3	5_O&M	397																																				0	0	0.00	
3	5_O&M	398																																				0	0	0.00	
3	5_O&M	399																																				0	0	0.00	
3	5_O&M	400																																				0	0	0.00	
3	5_O&M	401																																				0	0	0.00	
3	5_O&M	402																																				0	0	0.00	
3	5_O&M	403																																				0	0	0.00	
3	5_O&M	404																																				0	0	0.00	
3	5_O&M	405																																				0	0	0.00	
3	5_O&M	406																																				0	0	0.00	
3	5_O&M	407																																				0	0	0.00	
3	5_O&M	408																																				0	0	0.00	
3	5_O&M	409																																				0	0	0.00	
3	5_O&M	410																																				0	0	0.00	
3	5_O&M	411																																				0	0	0.00	
3	5_O&M	412																																				0	0	0.00	
3	5_O&M	413																																				0	0	0.00	
3	5_O&M	414																																				0	0	0.00	
3	5_O&M	415																																				0	0	0.00	
3	5_O&M	416																																				0	0	0.00	
3	5_O&M	417																																				0	0	0.00	
3	5_O&M	418																																				0	0	0.00	
3	5_O&M	419																																				0	0	0.00	
3	5_O&M	420																																				0	0	0.00	
3	5_O&M	421																																				0	0	0.00	
3	5_O&M	422																																				0	0	0.00	

Phase	Priority	Ranking	Repair Completion Date	2018_Project	Total Structural Defect Score	Structural Defect Index	Operational and Maintenance: Deposits AGS	Deposits AE B	Deposits AE %	Deposits L	Deposits AE %	Deposits Other Z	Deposits Other %	Roots (R) Fine (F) B	Roots (R) Fine (F) L	Roots (R) Tap (T) J	Roots (R) Tap (T) C	Roots (R) Tap (T) B	Roots (R) Tap (T) L	Roots (R) Tap (T) J	Roots (R) Tap (T) C	Roots (R) Medium (M) B	Roots (R) Medium (M) L	Roots (R) Medium (M) J	Roots (R) Medium (M) C	Roots (R) Ball (B) B	Roots (R) Ball (B) L	Roots (R) Ball (B) J	Roots (R) Ball (B) C	Infiltration I	Obstacles OB	Obstacles Other C	Obstacles Other Z	Obstacles Other %	Vermin V	Vermin C	Vermin R	PACP Quick Maint Rating	Total O&M Defects	Total O&M Defect Score	O&M Defect Index
2	4_Minor	896																																				0	0		
2	4_Minor	897					10	41	5.00	2	5.00					37							1	2	1		1											95	160		
2	4_Minor	898																																				0	0		
2	4_Minor	899					30									2																						32	62		
2	4_Minor	901														3																						3	3		
2	4_Minor	902						50	5.00	1	30.00																								1			52	103		
2	4_Minor	903														1																						1	1		
2	4_Minor	904																																				0	0		
2	4_Minor	905										81	5.00																						11			92	254		
2	4_Minor	906						48	5.00																										13			48	96		
4	5_O&M	234			0	0	198																												13			211	409	1.94	0
4	5_O&M	235			0	0	198																												13			211	409	1.94	0
4	5_O&M	236			0	0	198																												13			211	409	1.94	0
4	5_O&M	237			0	0	141																															141	282	2.00	0
4	5_O&M	238			0	0	141																															141	282	2.00	0
4	5_O&M	239			0	0	90																												6			96	186	1.94	0
4	5_O&M	240			0	0	90																												6			96	186	1.94	0
4	5_O&M	241			0	0	73																															73	146	2.00	0
4	5_O&M	242			0	0	60																1	1														62	127	2.05	0
4	5_O&M	243			0	0	15					6		1																								22	50	2.27	0
4	5_O&M	244			0	0

Appendix D-3

| Phase | Priority | Ranking | Repair Completion Date | 2018_Project | Contractor | Tape No. | DVD No. | Inspection No. | Reversal Tape No. | Reversal DVD No. | Reversal Inspec. No. | DVD Watched? (Y) | Location | Street Name | CCTV Date | Existing MH ID Start | Existing MH ID End | Previous MH ID Start | Previous MH ID End | Direction of Camera | Existing Sewer ID | Previous Sewer ID | Size (in) | Material | Joint Length (ft) | GIS Comment | Length (ft) | CCTV Length (ft) | Crack C L | Crack C C | Crack C M | Crack C S | Crack C H | Fracture F L | Fracture F C | Fracture F M | Fracture F S | Fracture F H | Broken B SV | Hole H VV | Hole H SV | Hole H VV | Joint O S | Joint J M | Joint J L | Joint J S | Joint J M | Joint J L | Joint J A | Deformed D | Collapsed Pipe X | Surface Damage S | Lining Failure LF | Point Repair RP | Sags WL | PACP Quick Struct Rating | Total Structural Defects | Total Structural Defect Score | Structural Defect Index | Deposits AGS | Deposits AE B | Deposits AE % | Deposits AE L | Deposits AE % | Deposits Other C | Deposits Other Z | Deposits Other % | Roots (R) Fine (F) B | Roots (R) Fine (F) L | Roots (R) Fine (F) J | Roots (R) Tap (T) C | Roots (R) Tap (T) B | Roots (R) Tap (T) L | Roots (R) Tap (T) J | Roots (R) Medium (M) C | Roots (R) Medium (M) B | Roots (R) Medium (M) L | Roots (R) Medium (M) J | Roots (R) Ball (B) C | Roots (R) Ball (B) B | Roots (R) Ball (B) L | Roots (R) Ball (B) J | Infiltration I C | Infiltration I G | Infiltration I D | Infiltration I R | Infiltration I W | Obstacles OB C | Obstacles OB Z | Obstacles OB Other % | Vermin V C | Vermin V R | PACP Quick Maint Rating | Total O&M Defects | Total O&M Defect Score | O&M Defect Index | Tap (Lateral) T FD | Tap (Lateral) T FL | Tap (Lateral) T BI | Tap (Lateral) T BD | Line L D | Line L L | Line L U | Line L R | Intruding Seal Material IS LD | Intruding Seal Material IS RD | Intruding Seal Material IS SRH | Intruding Seal Material IS SRB | Intruding Seal Material IS SRL | Intruding Seal Material IS Z | Miscellaneous M SA | Miscellaneous M CU | Miscellaneous M MC | Total Construction Features | Reasons for Survey Aborted | GIS Identified Abandoned | Repair Description | Comments | Recommendations |
|---|---|---

Appendix D-3

| Phase | Priority | Ranking | Repair Completion Date | 2018_Project | General: Contractor | Tape No. | DVD No. | Inspection No. | Reversal Tape No. | Reversal DVD No. | Reversal Inspec. No. | DVD Watched? (Y) | Location: Street Name | CCTV Date | Existing MH ID: Start | Existing MH ID: End | Previous MH ID: Start | Previous MH ID: End | Direction of Camera | Pipe: Existing Sewer ID | Pipe: Previous Sewer ID | Pipe: Size (in) | Pipe: Material | Pipe: Joint Length (ft) | Pipe: GIS Comment | Length (ft) | CCTV Length (ft) | Structural Defect Coding: Crack: C | Fracture: F | Broken: B | Hole: H | Joint: J | Deformed: D | Collapsed Pipe: X | Surface Damage: S | Lining Failure: LF | Point Repair: RP | Sags: WL | PACP Quick Struct Rating | Total Structural Defects | Total Structural Defect Score | Structural Defect Index | Operational and Maintenance: Deposits: AGS | Deposits: AE B | Deposits: AE % | Deposits: AE L | Deposits: Other % | Deposits: Other Z | Roots (R): Fine (F) B | Roots (R): Fine (F) L | Roots (R): Fine (F) J | Roots (R): Tap (T) C | Roots (R): Tap (T) B | Roots (R): Tap (T) L | Roots (R): Tap (T) J | Roots (R): Medium (M) C | Roots (R): Medium (M) B | Roots (R): Medium (M) L | Roots (R): Medium (M) J | Roots (R): Ball (B) C | Roots (R): Ball (B) B | Roots (R): Ball (B) L | Roots (R): Ball (B) J | Infiltration: I C | Obstacles: OB G | Obstacles: OB D | Obstacles: OB R | Vermin: V W | Vermin: Other C | Vermin: Other Z | Vermin: Other % | Vermin: Other C | Vermin: Other R | PACP Quick Maint Rating | Total O&M Defects | Total O&M Defect Score | O&M Defect Index | Construction Features: Tap (Lateral): T FD | T FL | T BI | T BD | Line: L D | L L | L U | L R | Intruding Seal Material: IS LD | IS RD | IS SRH | IS SRB | IS SRL | IS Z | Miscellaneous: M SA | M CU | M MC | Total Construction Feature | Reasons for Survey Aband | GIS Identified Abandoned | Repair Description | Comments | Recommendations |
|---|---|---

Appendix D-3

| Phase | Priority | Ranking | Repair Completion Date | 2018_Project | General: Contractor | Tape No. | DVD No. | Inspection No. | Reversal Tape No. | Reversal DVD No. | Reversal Inspec. No. | DVD Watched? (Y) | Location: Street Name | CCTV Date | Existing MH ID: Start | Existing MH ID: End | Previous MH ID: Start | Previous MH ID: End | Direction of Camera | Pipe: Existing Sewer ID | Pipe: Previous Sewer ID | Pipe: Size (in) | Pipe: Material | Pipe: Joint Length (ft) | Pipe: GIS Comment | Length (ft) | CCTV Length (ft) | Structural Defect Coding: Crack C (L C M S H) | Fracture F (L C M S H) | Broken B (SV) | Hole H (VV SV VV) | Joint J: O (S) | Joint J: S (M L S M L) | Joint J (L A V H P) | Deformed D | Collapsed Pipe X | Surface Damage S | Lining Failure LF | Point Repair RP | Sags WL | PACP Quick Struct Rating | Total Structural Defects | Total Structural Defect Score | Structural Defect Index | Operational and Maintenance: Deposits AGS | Deposits AE B | Deposits AE % | Deposits AE L | Deposits AE % | Deposits Other Z | Deposits Other % | Roots (R) Fine (F) B | Roots (R) Fine (F) L | Roots (R) Fine (F) J | Roots (R) Tap (T) C | Roots (R) Tap (T) B | Roots (R) Tap (T) L | Roots (R) Tap (T) J | Roots (R) Tap (T) C | Roots (R) Medium (M) B | Roots (R) Medium (M) L | Roots (R) Medium (M) J | Roots (R) Medium (M) C | Roots (R) Ball (B) B | Roots (R) Ball (B) L | Roots (R) Ball (B) J | Roots (R) Ball (B) C | Infiltration I: G | Infiltration I: D | Infiltration I: R | Infiltration I: W | Obstacles OB: C | Obstacles OB: Z | Obstacles OB: % | Vermin V: C | Vermin V: R | PACP Quick Maint Rating | Total O&M Defects | Total O&M Defect Score | O&M Defect Index | Construction Features: Tap (Lateral) T: FD | T: FL | T: BI | T: BD | Line L: D | L: L | L: U | L: R | L: LD | L: RD | Intruding Seal Material IS: SRH | IS: SRB | IS: SRL | IS: Z | Miscellaneous M: SA | M: CU | M: MC | Total Construction Features | Reasons for Survey Aborted | GIS Identified Abandoned | Repair Description | Comments | Recommendations |
|---|---|---

Appendix D-3

| Phase | Priority | Ranking | Repair Completion Date | 2018_Project | General | | | | | | | | | | | | | | | Existing MH ID | | Previous MH ID | | Direction of Camera | Pipe | | | | | | | | | | | | | | |

Phase	Priority	Ranking	Repair Completion Date	2018_Project	Contractor	Tape No.	DVD No.	Inspection No.	Reversal Tape No.	Reversal DVD No.	Reversal Inspec. No.	DVD Watched? (Y)	Location Street Name	CCTV Date	Existing MH ID Start	Existing MH ID End	Previous MH ID Start	Previous MH ID End	Direction of Camera	Existing Sewer ID	Previous Sewer ID.	Size (in)	Material	Joint Length (ft)	GIS Comment	Length (ft)	CCTV Length (ft)
1	5_O&M	679		X		44		20					8972 Acacia Ave.	4/27/2004	8373	14301	MHK120009	COL120001	US	7982	SPK120002	8	VCP			127	124
3	5_O&M	679			GGSD		50	1593					WILD GOOSE	11/2/2005	8269	8287	MHG090006	MHG090004	U/S	1330	SPG090025	8	VCP			158	155
5	5_O&M	679			PPT		May Folder 2	17		May Folder 2	18		RAYMOND CIR	5/30/2012	8923	8924	MHE110033	MHE110034	D/S	1349	SPE110007	8	VCP			152	152.2
1	5_O&M	680	2018-06-06	X		34		17					8561 Stanford Ave.	4/5/2004	8429	8427	MHK120031	MHK120029	US	3405	SPK120031	8	VCP			250	250
3	5_O&M	680			GGSD		50	1594					AMY	11/8/2005	8271	8270	MHG090008	MHG090007	U/S	1060	SPG090012	8	VCP			366	367
5	5_O&M	680			PPT		Map 1 May	17					BLACKMER STREET	5/17/2012	7839	7842	MHE080026	MHE080028	D/S	984	SPE080002	8	VCP			252	260
1	5_O&M	681				29		11					8802 Brookdale Ave.	3/29/2004	11556	11600	MHK130013	MHK130014	DS	2798	SPK130019	8	VCP			245	244
3	5_O&M	681			GGSD		49	1588					CHAPMAN	11/7/2005	8277	8276	MHG090016	MHG090015	U/S	1064	SPG090016	8	VCP			366	363
5	5_O&M	681		X	PPT		MAP 2-1-3	11					FLOWER STREET	7/16/2012	11318	11320	MHN140037	MHN150005	D/S	2915	SPN140023	8	VCP			425	416.9
1	5_O&M	682				33		21					13390 Yockey St.	4/1/2004	11614	11615	MHK140031	MHK140032	DS	2790	SPK140021	8	PVC			226	232
3	5_O&M	682			GGSD		48	1572				Y	VANGUARD	11/1/2005	7332	8765	MHG090022	MHG090021	U/S	1319	SPG090056	8	VCP			240	284
5	5_O&M	682			PPT		MAP 4-B1-1	8					CLINTON STREET	9/6/2012	7510	7509	MHS170021	MHS170020	U/S	483	SPS170021	8	PVC			290	171.7
1	5_O&M	683				22		4				x	9911 Acacia Ave.	3/12/2004	10730	10731	MHM120008	MHM120009	DS	2651	SPM120008	8	VCP	3		215	266
3	5_O&M	683			GGSD		48	1572				Y	VANGUARD	11/1/2005	7333	7332	MHG090023	MHG090022	U/S	1473	SPG090034	8	VCP			200	204
5	5_O&M	683			PPT		MAP 4-B1-4	16					MICHAEL STREET	9/12/2012	6800	6799	MHP190008	MHP190007	U/S	64	SPP190007	8	VCP			356	375.4
1	5_O&M	684				22		12					9941 Belfast Dr.	3/12/2004	10759	10760	MHM130024	MHM130025	DS	2332	SPM130010	6	VCP			145	148
3	5_O&M	684	2012-07-24		GGSD		40	1410				Y	BELGRAVE	7/15/2005	8285	8284	MHG090040	MHG090039	U/S	1327	SPG090022	8	VCP			350	53
5	5_O&M	684			PPT		MAP 3-B4-2	8					BIXLER DR	10/2/2012	12962	12963	MHP080002	MHO080002	D/S	6245	SPP080026	8	VCP			346	305
1	5_O&M	685				36		19					9738-5 Galway St./Shop.Cntr.	4/7/2004	10772	11080	MHM130034	COM130003	US	2676	SPM130019	8	VCP			190	189
3	5_O&M	685			GGSD		40	1410				Y	BELGRAVE	7/15/2005	8286	8285	MHG090041	MHG090040	U/S	1328	SPG090023	8	VCP			350	348
5	5_O&M	685			PPT		Map 1 May	85					ACACIA AVE	5/31/2012	7325	7326	MHG120015	MHG120016	D/S	1691	SPG120025	8	VCP			268	266.3
1	5_O&M	686		X		22		24					9934 Belfast Dr.	3/15/2004	10760	10778	MHM130025	MHM130040	US	2346	SPM130028	6	VCP			335	210
3	5_O&M	686			GGSD		40	1411					BELGRAVE	7/15/2005	7348	8766	MHG090043	MHG090042	U/S	1320	SPG090057	8	VCP			350	347
5	5_O&M	686			PPT		Map 1 May	74					OLIVE STREET	5/31/2012	7763	7764	MHE120019	MHE120020	D/S	1376	SPE120016	8	VCP			350	352.8
1	5_O&M	687		X		20		21					13450 Cork St.	3/11/2004	12012	12010	MHM140031	MHM140028	US	2721	SPM140012	8	VCP			260	258
3	5_O&M	687			GGSD		50	1599					LAMPLIGHTER	11/8/2005	8324	8325	MHG100004	MHG100005	D/S	1119	SPG100007	8	VCP			149	148
5	5_O&M	687			PPT		May Folder 2	11					CHASE STREET	5/29/2012	7755	7754	MHE120013	MHE120012	U/S	1367	SPE120009	8	VCP			350	353.4
1	5_O&M	688		X		12		18					10422 Stanford Ave.	2/27/2004	11245	11120	MHN120011	MHN120001	DS	2918	SPN120020	8	VCP			270	83
3	5_O&M	688			GGSD		50	1615					PICKETT	11/14/2005	8330	8329	MHG100009	MHG100008	U/S	1124	SPG100012	8	VCP			350	349
5	5_O&M	688			PPT		MAP 1	16					CHAPMAN AVENUE	5/8/2012	8295	8296	MHG080006	MHG080007	D/S	1091	SPG080017	8	VCP			314	309
1	5_O&M	689				11		4	11		5		12781 Groveview St.	2/20/2004	11323	11324	MHN120019	MHN120020	DS	2812	SPN120022	8	VCP			227	229
3	5_O&M	689			GGSD		50	1615					PICKETT	11/14/2005	8331	8330	MHG100010	MHG100009	U/S	1125	SPG100013	8	VCP			350	349
5	5_O&M	689			PPT		MAP 4-B2-1	8					MAYS STREET	9/10/2012	7612	7613	MHK160022	MHK160021	U/S	658	SPK160022	8	VCP			207	207.2
1	5_O&M	690				14		6					13162 Brookhurst	3/1/2004	10707	11297	MHN130034	MHN130035	DS	3083	SPN130042	6	VCP			360	19
3	5_O&M	690			PPT		49	18					LAMPSON	11/5/2007	8242	8243	MHG110001	MHG110002	D/S	977	SPG110018	8	VCP			362	369
5	5_O&M	690		X	PPT		MAP 3-6	7		MAP 3-6	6		WALNUT AVENUE	7/31/2012	11760	11761	MHP110009	MHP110010	D/S	4634	SPP110036	6	Clay Tile			331	280
1	5_O&M	691				10		16					13112 Nelson St.	2/23/2004	11381	11380	MHO130036	MHO130037	DS	2772	SPO130028	8	VCP			298	225
3	5_O&M	691			PPT		49	19		49	20		LAMPSON	11/5/2007	8243	8244	MHG110002	MHG110003	D/S	978	SPG110019	8	VCP			363	370
5	5_O&M	691			PPT		Map 1 May	38					HUNTLEY AVENUE	5/22/2012	8784	8785	MHF100012	MHF100013	D/S	1236	SPF100015	8	VCP			350	349.3
1	5_O&M	692		X		13		10					10402 Imperial Ave.	3/1/2004	11192	11194	MHO140004	MHO140006	DS	2287	SPO140042	8	VCP			260	258
3	5_O&M	692			PPT		49	21					LAMPSON	11/5/2007	8244	8245	MHG110003	MHG110004	D/S	1036	SPG110020	8	VCP			363	365
5	5_O&M	692			PPT		Map 1 May	40					TOPAZ STREET	5/22/2012	7400	7399	MHF100006	MHF100007	U/S	1213	SPF100009	8	VCP			256	249.5
1	5_O&M	693				7A		2					12371 Walnut	2/10/2004	11782	11781	MHP100031	MHP100030	US	4644	SPP100037	6	VCP			220	218
3	5_O&M	693			PPT		48	12					LAMPSON	10/17/2007	8245	8332	MHG110004	MHG110005	D/S	1312	SPG110053	8	VCP			363	105
5	5_O&M	693			PPT		Map 1 May	21					WINTON STREET	5/17/2012	7878	7879	MHE090039	MHE090040	D/S	1534	SPE090050	8	VCP			350	352.2
1	5_O&M	694		X		21		17					11100 Garden Grove Blvd.	3/15/2004	11738	11732	MHP130013	MHP130009	DS	4448	SPP130030	12	VCP			270	279
3	5_O&M	694			PPT		49	34					LAMPLIGHTER	11/9/2007	8332	7729	MHG110005	MHG110009	D/S	1127	SPG110029	8	VCP			170	173
5	5_O&M	694			PPT		May Folder 2	9					LONGDEN STREET	5/29/2012	8842	8841	MHE120009	MHE120008	U/S	1638	SPE120002	8	VCP			350	353.6
1	5_O&M	695				37		2					12701 Monroe St.	4/8/2004	7704	7706	MHJ110008	MHJ120023	DS	737	SPJ110004	8	VCP			260	259
3	5_O&M	695			PPT		41	32					LENORE	9/18/2007	7732	7731	MHG110012	MHG110011	D/S	1134	SPG110036	8	VCP			362	368
5	5_O&M	695			PPT		Map 1 May	43					LUARELTONAVENUE	5/22/2012	7780	8652	MHE090019	MHE090034	D/S	1393	SPE090030	8	VCP			325	323.1
1	5_O&M	696		X		37		6					12860 Jefferson St.	4/8/2004	7087	7086	MHJ120003	MHJ120002	US	722	SPJ120002	8	VCP			298	298
3	5_O&M	696			PPT		43	2				Y	CERULEAN	9/18/2007	7739	7737	MHG110015	MHG110043	D/S	1141	SPG110043	8	VCP			338	340
5	5_O&M	696			PPT		MAP 3-B3-4	11					TRASK AVENUE	8/30/2012	13982	13983			U/S	7609	new	6	VCP			355	359.5
1	5_O&M	697		X		40		20					13082 Monroe St.	4/15/2004	7721	7720	MHJ130012	MHJ130011	US	784	SPJ130006	8	VCP			220	220
3	5_O&M	697			PPT		43	9					STANFORD	9/21/2007	7741	7744	MHG110027	MHG110029	D/S	1458	SPG110049	8	VCP			282	282
5	5_O&M	697			PPT		May Folder 2	14					KILLARNEY AVE	5/30/2012	8826	8827	MHF110034	MHF110035	D/S	1626	SPF110030	8	VCP			300	303.1
1	5_O&M	698				38		7					13342 Jefferson St.	4/13/2004	7063	7062	MHJ140011	MHJ140010	US	802	SPJ140011	8	VCP			260	252
3	5_O&M	698			PPT		43	10					STANFORD	9/21/2007	7743	7744	MHG110028	MHG110029	D/S	1460	SPG110051	8	VCP			367	367
5	5_O&M	698			PPT		May Folder 2	13					KILLARNEY AVE	5/30/2012	8826	8825	MHF110034	MHF110033	U/S	1625	SPF110029	8	VCP			300	301.6
1	5_O&M	699		X		38		14					13432 Balos Dr.	4/13/2004	7078	7077	MHJ140023	MHJ140022	US	815	SPJ140024	8	VCP			310	310
3	5_O&M	699			PPT		53	6		43	17		PARK	1/10/2008	7746	7745	MHG120004	MHG120003	U/S	1462	SPG120018	8	VCP			289	293
5	5_O&M	699			PPT		May Folder 2	15		May Folder 2	19		KILLARNEY AVE	5/30/2012	8827	7789	MHF110035	MHE110032	D/S	1404	SPE110029	8	VCP			300	302
1	5_O&M	700				45		3					13362 Coast St.	4/28/2004			MHJ140035	MHJ140036	DS		SPJ140037	10	VCP			300	300
3	5_O&M	700			PPT		43	32				Y	CANTER	9/25/2007	7748	7746	MHG120008	MHG120004	U/S	1463	SPG120019	8	VCP			256	256
5	5_O&M	700			PPT		Map 1 May	73					ANTHONY AVE	5/31/2012	7774	7900	MHE120030	MHE120029	D/S	1757	SPE120037	10	VCP			286	287.8
1	5_O&M	701		X		34		20					12551 Dale Ave.	4/5/2004	8435	8369	MHK110027	COK110001	US	3413	SPK110036	8	VCP			118	119
3	5_O&M	701			PPT		47	2					ACACIA	10/9/2007	7326	7407	MHG120016	MHF120002	D/S	1704	SPF120028	10	VCP			273	260
5	5_O&M	701			PPT		MAP 4-B1-3	19					McFADDEN AVE	9/11/2012	6877	7317	MHO230001	MHO230002	D/S	185	SPO230030	8	VCP			523	312.2
1	5_O&M	702		X		29		17					13061 Yockey St.	3/29/2004	11599	11600	MHK130012	MHK130014	DS	2967	SPK130011	8	VCP			200	192
3	5_O&M	702			PPT		45	10					ANTHONY	10/1/2007	7328	7329	MHG120023	MHG120024	D/S	1469	SPG120027	8	VCP			355	359
5	5_O&M	702			PPT		Map 1 May	31					PICKETT AVENUE	5/21/2012	8789	8790	MHF100016	MHE100025	D/S	1241	SPF100019	8	VCP			349	347.9

Phase	Ranking	Crack (C) L	Crack C	Crack M	Crack S	Crack H	Fracture (F) L	Fracture C	Fracture M	Fracture S	Fracture H	Broken (B) SV	Broken VV	Hole (H) SV	Hole VV	Joint (J) O S	Joint O M	Joint O L	Joint S S	Joint S M	Joint S L	Joint A	Deformed (D) V	Deformed H	Collapsed Pipe (X) P	Surface Damage S	Lining Failure LF	Point Repair RP	Sags (WL) S	PACP Quick Struct Rating	Total Structural Defects	Total Structural Defect Score	Structural Defect Index
1	679																															0	0.00
3	679																														0	0	0.00
5	679																													0000			
1	680																															0	0.00
3	680																														0	0	0.00
5	680																													0000	0	0	0.00
1	681																															0	0.00
3	681																														0	0	0.00
5	681																													0000	0	0	0.00
1	682																															0	0.00
3	682																														0	0	0.00
5	682																													0000	0	0	0.00
1	683																															0	0.00
3	683																														0	0	0.00
5	683																													0000	0	0	0.00
1	684																															0	0.00
3	684																														0	0	0.00
5	684																													0000	0	0	0.00
1	685																															0	0.00
3	685																														0	0	0.00
5	685																													0000	0	0	0.00
1	686																															0	0.00
3	686																														0	0	0.00
5	686																													0000	0	0	0.00
1	687																															0	0.00
3	687																														0	0	0.00
5	687																													0000	0	0	0.00
1	688																															0	0.00
3	688																														0	0	0.00
5	688																													0000	0	0	0.00
1	689																															0	0.00
3	689																														0	0	0.00
5	689																													0000	0	0	0.00
1	690																															0	0.00
3	690																														0	0	0.00
5	690																													0000	0	0	0.00
1	691																															0	0.00
3	691																														0	0	0.00
5	691																													0000	0	0	0.00
1	692																															0	0.00
3	692																														0	0	0.00
5	692																													0000	0	0	0.00
1	693																															0	0.00
3	693																														0	0	0.00
5	693																													0000	0	0	0.00
1	694																															0	0.00
3	694																														0	0	0.00
5	694																													0000	0	0	0.00
1	695																															0	0.00
3	695																														0	0	0.00
5	695																													0000	0	0	0.00
1	696																															0	0.00
3	696																														0	0	0.00
5	696																													0000	0	0	0.00
1	697																															0	0.00
3	697																														0	0	0.00
5	697																													0000	0	0	0.00
1	698																															0	0.00
3	698																														0	0	0.00
5	698																													0000	0	0	0.00
1	699																															0	0.00
3	699																														0	0	0.00
5	699																													0000	0	0	0.00
1	700																															0	0.00
3	700																														0	0	0.00
5	700																													0000	0	0	0.00
1	701																															0	0.00
3	701																														0	0	0.00
5	701																													0000	0	0	0.00
1	702																															0	0.00
3	702																														0	0	0.00
5	702																													0000	0	0	0.00

Phase	Ranking	Deposits (D) AGS	AE B	AE %	AE L	AE %	Other Z	Other %	Roots Fine (F) B	Fine L	Fine J	Fine C	Tap (T) B	Tap L	Tap J	Tap C	Medium (M) B	Medium L	Medium J	Medium C	Ball (B) B	Ball L	Ball J	Ball C	Infiltration (I) G	Infiltration D	Infiltration R	Infiltration W	Obstacles (OB) Other C	Other Z	Other %	Vermin (V) C	Vermin R	PACP Quick Maint Rating	Total O&M Defects	Total O&M Defect Score	O&M Defect Index
1	679												1																							3	0.65
3	679										9																								9	9	1.00
5	679		3																															4122			
1	680																																			3	0.64
3	680										1																								1	1	1.00
5	680						3																											4122			
1	681						1	5.00																												3	0.66
3	681									1	21								1																23	25	1.09
5	681																													1	20			4100	1	4	4.00
1	682						1	10.00																												3	0.53
3	682		75																																75	150	2.00
5	682																																	4100	1	4	4.00
1	683									1				1																						3	0.64
3	683		60																																60	120	2.00
5	683						28															1												412D	29	60	2.07
1	684																																			3	0.66
3	684		10																																10	20	2.00
5	684																					1												4100	1	4	4.00
1	685						1	10.00																												3	0.53
3	685		68				1																												69	139	2.01
5	685						51																											352H	51	102	2.00
1	686																																			3	0.66
3	686		1																																1	2	2.00
5	686						69																											332L	69	138	2.00
1	687												1																							3	0.55
3	687		1																																1	2	2.00
5	687						69																											332L	69	138	2.00
1	688						1	30.00																												3	0.45
3	688		3																																3	6	2.00
5	688		51				7																											332J	58	116	2.00
1	689																																			3	0.66
3	689		6																																6	12	2.00
5	689										2								3															3312	5	11	2.20
1	690																																			3	0.53
3	690		1																																1	2	2.00
5	690																																	3300	3	9	3.00
1	691								1	1																										3	0.66
3	691		3																																3	6	2.00
5	691						70																											322L	70	140	2.00
1	692						1	20.00																												3	0.51
3	692		2																																2	4	2.00
5	692						48																			1								322H	49	99	2.02
1	693								1	1																										3	0.84
3	693										1																								1	1	1.00
5	693						68																											312L	68	136	2.00
1	694																																			2	0.56
3	694		1																																1	2	2.00
5	694						69																											312L	69	138	2.00
1	695													1																						2	0.56
3	695		1																																1	2	2.00
5	695						63																			1								312K			
1	696								1																											2	0.56
3	696		1																																1	2	2.00
5	696						64				19					1																		312K	84	149	1.77
1	697								1																											2	0.56
3	697		1																																1	2	2.00
5	697						60																			1								312K	61	123	2.02
1	698								1																											2	0.56
3	698		1																																1	2	2.00
5	698						59																			1								312J	60	121	2.02
1	699													1																						2	0.56
3	699		2																																2	4	2.00
5	699						47																											312H	47	94	2.00
1	700	1						50.00																												2	0.56
3	700		1																																1	2	2.00
5	700	8					36																											312G	44	88	2.00
1	701								1																											2	0.58
3	701		1																																1	2	2.00
5	701						28																											312D	28	56	2.00
1	702	1						10.00																												2	0.44
3	702		1																																1	2	2.00
5	702						14																											312A	14	28	2.00

Phase	Ranking	Tap (Lateral) (T) FD	Tap FL	Tap BI	Tap BD	Line (L) D	Line L	Line U	Line R	Line LD	Line RD	Intruding Seal Material (IS) SRH	IS SRB	IS SRL	IS Z	Miscellaneous (M) SA	Misc CU	Misc MC	Total Construction Features	Reasons for Survey Abandoned	GIS Identified Abandoned	Repair Description	Comments	Recommendations
1	679															1				C-4" DI Pipe				Cut roots
3	679																							
5	679															2							Inspection Completed.2' 25% DSZ	Clean DSZ after 2'
1	680			1																		Replaced section of 8" VCP main.		Repair lateral
3	680																							
5	680																						255.5' Heavy (30 %) DAZ. Inspection Completed	Clean DAZ
1	681																							Clear deposit
3	681																							
5	681																	1						
1	682																							Clear deposit
3	682																							
5	682															1	1						171.7' MSA (MCU). No Reversal Video	
1	683																							Cut roots
3	683																							
5	683																							
1	684			1																				Repair lateral
3	684															1						Repaired fractured pipes.	MSA = Heavy DAE	
5	684																	1						
1	685																							Clear deposit
3	685																						Some parts Heavy DAE	
5	685																							
1	686			1												1				TBI				Repair lateral
3	686																							
5	686																							
1	687																							Cut roots
3	687																							
5	687																							
1	688															1				DAZ				Clear deposit
3	688																							
5	688																							
1	689			1												2				TBI				Repair lateral
3	689																							
5	689																							
1	690			1																				Repair lateral
3	690			1																				
5	690			3												2							262.2' MSA (TBI) & 17.8' MSA From D/S MH. 113.2' Unmapped MH. Inspection Couldn't Completed	
1	691																							Cut roots
3	691															1							MSA = DAE (20%)	
5	691																							
1	692																							Clear deposit
3	692																							
5	692																							
1	693																							Cut roots
3	693																							
5	693																							
1	694			1																				Repair lateral
3	694																							
5	694																							
1	695																							Cut roots
3	695																						Pipe ID SPG110037 corrected to SPG110036	
5	695																							
1	696																							Cut roots
3	696																						DAE 15% of the cross sectional area	
5	696																							
1	697																							Cut roots
3	697																							
5	697																							
1	698																							Cut roots
3	698																							
5	698																							
1	699																							Cut roots
3	699															2							MSA = Deposit (20%)	
5	699															2							Inspection Completed	
1	700																							Clean grease
3	700																						DAE 50% of the cross sectional area	
5	700																							
1	701																							Cut roots
3	701																							
5	701																							
1	702																							Clean grease
3	702																							
5	702																							

Appendix D-3

| Phase | Priority | Ranking | Repair Completion Date | 2018_Project | Contractor | Tape No. | DVD No. | Inspection No. | Reversal Tape No. | Reversal DVD No. | Reversal Inspec. No. | DVD Watched? (Y) | Location | CCTV Date | Existing MH ID | | Previous MH ID | | Direction of Camera | Pipe | | |

Appendix D-3

| Phase | Priority | Ranking | Repair Completion Date | 2018_Project | General: Contractor | Tape No. | DVD No. | Inspection No. | Reversal Tape No. | Reversal DVD No. | Reversal Inspec. No. | DVD Watched? (Y) | Location: Street Name | CCTV Date | Existing MH ID: Start | Existing MH ID: End | Previous MH ID: Start | Previous MH ID: End | Direction of Camera | Pipe: Existing Sewer ID | Pipe: Previous Sewer ID | Pipe: Size (in) | Pipe: Material | Pipe: Joint Length (ft) | Pipe: GIS Comment | Length (ft) | CCTV Length (ft) | Structural Defect Coding: Crack C L | Crack C C | Crack C M | Crack C S | Crack C H | Fracture F L | Fracture F C | Fracture F M | Fracture F S | Fracture F H | Broken B SV | Hole H VV | Hole H SV | Hole H VV | Joint O S | Joint J M | Joint J L | Joint J S M | Joint J L | Joint J A | Deformed D | Collapsed Pipe X | Surface Damage V | Surface Damage H | Surface Damage P | Surface Damage S | Lining Failure LF | Point Repair RP | Sags S | Sags WL | PACP Quick Struct Rating | Total Structural Defects | Total Structural Defect Score | Structural Defect Index | Operational and Maintenance: Deposits AGS | Deposits AE B | Deposits AE % | Deposits AE L | Deposits AE % | Deposits Other Z | Deposits Other % | Roots (R) Fine (F) B | Roots (R) Fine (F) L | Roots (R) Fine (F) J | Roots (R) Tap (T) C | Roots (R) Tap (T) B | Roots (R) Tap (T) L | Roots (R) Tap (T) J | Roots (R) Medium (M) C | Roots (R) Medium (M) B | Roots (R) Medium (M) L | Roots (R) Medium (M) J | Roots (R) Ball (B) C | Roots (R) Ball (B) B | Roots (R) Ball (B) L | Roots (R) Ball (B) J | Infiltration I C | Infiltration I G | Infiltration I D | Infiltration I R | Infiltration I W | Obstacles OB C | Obstacles OB Z | Obstacles OB Other % | Vermin V C | Vermin V R | PACP Quick Maint Rating | Total O&M Defects | Total O&M Defect Score | O&M Defect Index | Construction Features: Tap (Lateral) T FD | Tap (Lateral) T FL | Tap (Lateral) T BI | Tap (Lateral) T BD | Line L D | Line L L | Line L U | Line L R | Intruding Seal Material IS LD | Intruding Seal Material IS RD | Intruding Seal Material IS SRH | Intruding Seal Material IS SRB | Intruding Seal Material IS SRL | Intruding Seal Material IS Z | Miscellaneous M SA | Miscellaneous M CU | Miscellaneous M MC | Total Construction Feature | Reasons for Survey Aborted | GIS Identified Abandoned | Repair Description | Comments | Recommendations |
|---|---|---

Appendix D-3

| Phase | Priority | Ranking | Repair Completion Date | 2018_Project | Contractor | Tape No. | DVD No. | Inspection No. | Reversal Tape No. | Reversal DVD No. | Reversal Inspec. No. | DVD Watched? (Y) | Location | Street Name | CCTV Date | Existing MH ID Start | Existing MH ID End | Previous MH ID Start | Previous MH ID End | Direction of Camera | Pipe Existing Sewer ID | Pipe Previous Sewer ID. | Pipe Size (in) | Pipe Material | Pipe Joint Length (ft) | Pipe GIS Comment | Length (ft) | CCTV Length (ft) | Structural Defect Coding: Crack C | Fracture F | Broken B | Hole H | Joint J | Deformed D | Collapsed Pipe X | Surface Damage S | Lining Failure | Point Repair | Sags WL | PACP Quick Struct Rating | Total Structural Defects | Total Structural Defect Score | Structural Defect Index | Operational and Maintenance: Deposits AGS | Deposits AE B | Deposits AE % | Deposits AE L | Deposits Other % | Deposits Other Z | Deposits Other % | Roots (R) Fine (F) B | Roots (R) Fine (F) L | Roots (R) Tap (T) J | Roots (R) Tap (T) C | Roots (R) Tap (T) B | Roots (R) Tap (T) L | Roots (R) Tap (T) J | Roots (R) Medium (M) C | Roots (R) Medium (M) B | Roots (R) Medium (M) L | Roots (R) Medium (M) J | Roots (R) Ball (B) C | Roots (R) Ball (B) B | Roots (R) Ball (B) L | Roots (R) Ball (B) J | Infiltration I C | Infiltration I G | Infiltration I D | Infiltration I R | Infiltration I W | Obstacles OB C | Obstacles OB Z | Obstacles OB Other % | Vermin V C | Vermin V R | PACP Quick Maint Rating | Total O&M Defects | Total O&M Defect Score | O&M Defect Index | Construction Features: Tap (Lateral) T FD | Tap (Lateral) T FL | Tap (Lateral) T BI | Tap (Lateral) T BD | Line L D | Line L L | Line L U | Line L R | Intruding Seal Material IS LD | Intruding Seal Material IS RD | Intruding Seal Material IS SRH | Intruding Seal Material IS SRB | Intruding Seal Material IS SRL | Intruding Seal Material IS Z | Miscellaneous M SA | Miscellaneous M CU | Miscellaneous M MC | Total Construction Feature | Reasons for Survey Aborted | GIS Identified Abandoned | Repair Description | Comments | Recommendations |
|---|---|---

| Phase | Priority | Ranking | Repair Completion Date | 2018_Project | Contractor | Tape No. | DVD No. | Inspection No. | Reversal Tape No. | Reversal DVD No. | Reversal Inspec. No. | DVD Watched? (Y) | Location | Street Name | CCTV Date | Existing MH ID Start | Existing MH ID End | Previous MH ID Start | Previous MH ID End | Direction of Camera | Pipe Existing Sewer ID | Pipe Previous Sewer ID | Pipe Size (in) | Pipe Material | Pipe Joint Length (ft) | GIS Comment | Length (ft) | CCTV Length (ft) | Structural Defect Coding Crack C L | Crack C C | Crack C M | Crack C S | Crack C H | Fracture F L | Fracture F C | Fracture F M | Fracture F S | Fracture F H | Broken B SV | Hole H VV | Hole H SV | Hole H VV | Joint O S | Joint O M | Joint J S | Joint J M | Joint J L | Joint J S | Joint J M | Joint J L | Joint J A | Deformed D V | Collapsed/ Pipe Damage X H | Surface Damage P | Surface Damage S | Lining Failure LF | Point Repair RP | Sags WL | Sags S | PACP Quick Struct Rating | Total Structural Defects | Total Structural Defect Score | Structural Defect Index | Operational and Maintenance Deposits AGS | Deposits AE B | Deposits AE % | Deposits AE L | Deposits AE % | Deposits Other Z | Deposits Other % | Roots (R) Fine (F) B | Roots (R) Fine (F) L | Roots (R) Fine (F) J | Roots (R) Tap (T) C | Roots (R) Tap (T) B | Roots (R) Tap (T) L | Roots (R) Tap (T) J | Roots (R) Tap (T) C | Roots (R) Medium (M) B | Roots (R) Medium (M) L | Roots (R) Medium (M) J | Roots (R) Medium (M) C | Roots (R) Ball (B) B | Roots (R) Ball (B) L | Roots (R) Ball (B) J | Roots (R) Ball (B) C | Infiltration I G | Infiltration I D | Infiltration I R | Infiltration I W | Obstacles OB C | Obstacles OB Other Z | Obstacles OB Other % | Vermin V C | Vermin V R | PACP Quick Maint Rating | Total O&M Defects | Total O&M Defect Score | O&M Defect Index | Construction Features Tap (Lateral) T FD | Tap (Lateral) T FL | Tap (Lateral) T BI | Tap (Lateral) T BD | Line L D | Line L L | Line L U | Line L R | Intruding Seal Material IS LD | Intruding Seal Material IS RD | Intruding Seal Material IS SRH | Intruding Seal Material IS SRB | Intruding Seal Material IS SRL | Intruding Seal Material IS Z | Miscellaneous M SA | Miscellaneous M CU | Miscellaneous M MC | Total Construction Feature | Reasons for Survey Aborted | GIS Identified Abandoned | Repair Description | Comments | Recommendations |
|---|---|---

Appendix D-3

| Phase | Priority | Ranking | Repair Completion Date | 2018_Project | Contractor | Tape No. | DVD No. | Inspection No. | Reversal Tape No. | Reversal DVD No. | Reversal Inspec. No. | DVD Watched? (Y) | Location | Street Name | CCTV Date | Existing MH ID | | Previous MH ID | | Direction of Camera | Pipe | | | | | | | | Length (ft) | CCTV Length (ft) | Structural Defect Coding | | | | | | | |

Appendix D-3

| Phase | Priority | Ranking | Repair Completion Date | 2018_Project | Contractor | Tape No. | DVD No. | Inspection No. | Reversal Tape No. | Reversal DVD No. | Reversal Inspec. No. | DVD Watched? (Y) | Location | Street Name | CCTV Date | Existing MH ID Start | Existing MH ID End | Previous MH ID Start | Previous MH ID End | Direction of Camera | Existing Sewer ID | Previous Sewer I.D. | Pipe Size (in) | Pipe Material | Pipe Joint Length (ft) | Pipe GIS Comment | Length (ft) | CCTV Length (ft) | Structural Defect Coding: Crack C | Fracture F | Broken B | Hole H | Joint J | Joint O | Joint S | Deformed D | Collapsed Pipe X | Surface Damage S | Lining Failure LF | Point Repair RP | Sags WL | PACP Quick Struct Rating | Total Structural Defects | Total Structural Defect Score | Structural Defect Index | Operational and Maintenance: Deposits AGS | Deposits D AE B | Deposits D AE % | Deposits D AE L | Deposits D Other % | Deposits D Other Z | Deposits D Other % | Roots (R) Fine (F) B | Roots (R) Fine (F) L | Roots (R) Fine (F) J | Roots (R) Tap (T) C | Roots (R) Tap (T) B | Roots (R) Tap (T) L | Roots (R) Tap (T) J | Roots (R) Medium (M) C | Roots (R) Medium (M) B | Roots (R) Medium (M) L | Roots (R) Medium (M) J | Roots (R) Ball (B) C | Roots (R) Ball (B) B | Roots (R) Ball (B) L | Roots (R) Ball (B) J | Infiltration I C | Infiltration I G | Infiltration I D | Infiltration I R | Infiltration I W | Obstacles OB C | Obstacles OB Z | Obstacles OB Other % | Vermin V C | Vermin V R | PACP Quick Maint Rating | Total O&M Defects | Total O&M Defect Score | O&M Defect Index | Construction Features: Tap (Lateral) T FD | Tap (Lateral) T FL | Tap (Lateral) T BI | Tap (Lateral) T BD | Line L D | Line L L | Line L U | Line L R | Intruding Seal Material IS LD | Intruding Seal Material IS RD | Intruding Seal Material IS SRH | Intruding Seal Material IS SRB | Intruding Seal Material IS SRL | Intruding Seal Material IS Z | Miscellaneous M SA | Miscellaneous M CU | Miscellaneous M MC | Total Construction Feature | Reasons for Survey Aborted | GIS Identified Abandoned | Repair Description | Comments | Recommendations |
|---|---|---

| Phase | Priority | Ranking | Repair Completion Date | 2018_Project | Contractor | Tape No. | DVD No. | Inspection No. | Reversal Tape No. | Reversal DVD No. | Reversal Inspec. No. | DVD Watched? (Y) | Location | Street Name | CCTV Date | Existing MH ID Start | Existing MH ID End | Previous MH ID Start | Previous MH ID End | Direction of Camera | Existing Sewer ID | Previous Sewer ID | Pipe Size (in) | Pipe Material | Pipe Joint Length (ft) | Pipe GIS Comment | Length (ft) | CCTV Length (ft) | Structural Defect Coding: Crack C (L C M S H) | Crack F (L C M S H) | Broken B (SV VV) | Hole H (SV VV) | Joint O (S M L) | Joint J (S M L) | Joint S (A V H P) | Deformed D | Collapsed Pipe X | Surface Damage S | Lining Failure LF | Point Repair RP | Sags WL | PACP Quick Struct Rating | Total Structural Defects | Total Structural Defect Score | Structural Defect Index | Operational and Maintenance: Deposits AGS | Deposits B | Deposits AE % | Deposits AE L | Deposits AE C | Deposits AE % | Deposits Other Z | Deposits Other % | Roots (R) Fine (F) B | Roots (R) Fine (F) L | Roots (R) Fine (F) J | Roots (R) Fine (F) C | Roots (R) Tap (T) B | Roots (R) Tap (T) L | Roots (R) Tap (T) J | Roots (R) Tap (T) C | Roots (R) Medium (M) B | Roots (R) Medium (M) L | Roots (R) Medium (M) J | Roots (R) Medium (M) C | Roots (R) Ball (B) B | Roots (R) Ball (B) L | Roots (R) Ball (B) J | Roots (R) Ball (B) C | Infiltration I | Obstacles OB | Obstacles Other C | Obstacles Other Z | Obstacles Other % | Vermin V | Vermin C | Vermin R | PACP Quick Maint Rating | Total O&M Defects | Total O&M Defect Score | O&M Defect Index | Construction Features: Tap (Lateral) T FD | Tap (Lateral) T FL | Tap (Lateral) T BI | Tap (Lateral) T BD | Line L D | Line L L | Line L U | Line L R | Line L LD | Line L RD | Intruding Seal Material IS SRH | Intruding Seal Material IS SRB | Intruding Seal Material IS SRL | Intruding Seal Material IS Z | Miscellaneous M SA | Miscellaneous M CU | Miscellaneous M MC | Total Construction Feature | Reasons for Survey Aband. | GIS Identified Abandoned | Repair Description | Comments | Recommendations |
|---|---|---

Appendix D-3

| Phase | Priority | Ranking | Repair Completion Date | 2018_Project | Contractor | Tape No. | DVD No. | Inspection No. | Reversal Tape No. | Reversal DVD No. | Reversal Inspec. No. | DVD Watched? (Y) | Location | Street Name | CCTV Date | Existing MH ID Start | Existing MH ID End | Previous MH ID Start | Previous MH ID End | Direction of Camera | Existing Sewer ID | Previous Sewer ID | Pipe Size (in) | Pipe Material | Pipe Joint Length (ft) | GIS Comment | Length (ft) | CCTV Length (ft) | Structural Defect Coding: Crack C | Fracture F | Broken B | Hole H | Joint O | Joint J | Deformed D | Collapsed Pipe X | Surface Damage S | Lining Failure LF | Point Repair RP | Sags SG | PACP Quick Struct Rating | Total Structural Defects | Total Structural Defect Score | Structural Defect Index | Operational and Maintenance: Deposits AGS | Deposits B | Deposits % | Deposits AE L | Deposits AE % | Deposits Other L | Deposits Other % | Deposits Other Z | Roots (R) Fine (F) B | Roots (R) Fine (F) L | Roots (R) Fine (F) J | Roots (R) Tap (T) C | Roots (R) Tap (T) B | Roots (R) Tap (T) L | Roots (R) Tap (T) J | Roots (R) Medium (M) C | Roots (R) Medium (M) B | Roots (R) Medium (M) L | Roots (R) Medium (M) J | Roots (R) Ball (B) C | Roots (R) Ball (B) B | Roots (R) Ball (B) L | Roots (R) Ball (B) J | Infiltration C | Infiltration G | Infiltration D | Infiltration R | Infiltration W | Obstacles OB C | Obstacles OB Z | Obstacles OB % | Vermin Other C | Vermin V R | PACP Quick Maint Rating | Total O&M Defects | Total O&M Defect Score | O&M Defect Index | Construction Features: Tap (Lateral) T FD | Tap (Lateral) T FL | Tap (Lateral) T BI | Tap (Lateral) T BD | Line L D | Line L L | Line L U | Line L R | Intruding Seal Material IS LD | Intruding Seal Material IS RD | Intruding Seal Material IS SRH | Intruding Seal Material IS SRB | Intruding Seal Material IS SRL | Intruding Seal Material IS Z | Miscellaneous M SA | Miscellaneous M CU | Miscellaneous M MC | Total Construction Feature | Reasons for Survey Aborted | GIS Identified Abandoned | Repair Description | Comments | Recommendations |
|---|---|---

Appendix D-3

Phase	Priority	Ranking	Repair Completion Date	2018_Project	Contractor	Tape No.	DVD No.	Inspection No.	Reversal Tape No.	Reversal DVD No.	Reversal Inspec. No.	DVD Watched? (Y)	Location	Street Name	CCTV Date	Existing MH ID Start	Existing MH ID End	Previous MH ID Start	Previous MH ID End	Direction of Camera	Existing Sewer ID	Previous Sewer ID	Size (in)	Material	Joint Length (ft)	GIS Comment	Length (ft)	CCTV Length (ft)	Structural Defect Coding	PACP Quick Struct Rating	Total Structural Defects	Total Structural Defect Score	Structural Defect Index	Operational and Maintenance	PACP Quick Maint Rating	Total O&M Defects	Total O&M Defect Score	O&M Defect Index	Construction Features	Miscellaneous	Total Construction Features	Reasons for Survey Aborted	GIS Identified Abandoned	Repair Description	Comments	Recommendations
2	5_O&M	1191					S003	11					TWINTREE CR		10/12/2005	12647	12648	MHT100023	MHT100024	D/S	5364	SPT100024	8	VCP			127	129.9		0	0										2					
2	5_O&M	1192					R030	8				Y	WEST ST		9/21/2005	11638	11637	MHR120003	MHR120002	U/S	5682	SPR120015	10	VCP			286	285.1		0	0										2					
2	5_O&M	1193					S002	8					SUNGROVE ST		10/11/2005	12699	12700	MHS110007	MHS110008	D/S	6383	SPS110004	8	VCP			125	116.5		0	0										1					
2	5_O&M	1194					S004	6					ASPENWOOD AV		10/13/2005	12686	12687	MHS120018	MHS120019	D/S	6370	SPS120012	8	VCP			136	135.9		0	0										1					
2	5_O&M	1195					R024	13					LAMPSON AV		9/9/2005	11714	12850	MHQ110005	COQ110002	U/S	6284	SPQ110038	8	VCP			150	150.0		0	0										1					
2	5_O&M	1196					R038	7					ALLEY		9/29/2005	12845	12846	MHT090020	COT090001	U/S	4032	SPT090031	8	VCP			185	188.2		0	0										1					
2	5_O&M	1197					R042	3					EASEMENT		10/24/2005	12450	12451	MHS120035	MHS120036	D/S	4978	SPS120043	10	VCP			200	200.6		0	0										1					
2	5_O&M	1198					M001	6					BOWLES AV		8/4/2005	10850	10853	MHK060021	MHK060024	D/S	5337	SPK060008	8	VCP			190	201.0		0	0										1					
2	5_O&M	1199					R025	2					MORGAN LN		9/12/2005	11711	11712	MHQ110002	MHQ110003	D/S	6217	SPQ110034	8	VCP			240	236.8		0	0										1					
2	5_O&M	1200					R040	9					DAWN AV		10/3/2005	12610	12611	MHT100006	MHT100007	D/S	4864	SPT100004	8	VCP			254	253.6		0	0										1					
2	5_O&M	1201					M016	2					EMRYS AV		9/8/2005	12166	12167	MHR110032	MHR110033	D/S	5909	SPR110009	8	VCP			300	301.7		0	0										1					
2	5_O&M	1202					R024	5					STRATHMORE DR		9/9/2005	11727	11728	MHQ110018	MHQ110019	D/S	6329	SPQ110052	8	VCP			360	360.0		0	0										1					
2	5_O&M	1203					M024	6					CHAPMAN AV		10/28/2005	13062	13063	MHQ090043	MHQ090044	D/S	6268	SPQ090037	12	VCP			25	23.2		0	0															
2	5_O&M	1204					M022	10					CHAPMAN AV		10/26/2005	13059	13060	MHR090037	MHR080022	D/S	6234	SPR090027	15	VCP			35	34.9		0	0															
2	5_O&M	1205					S006	12					FOREST DR		10/18/2005	12693	12691	MHS120043	MHS120023	D/S	6377	SPS120019	8	VCP			45	44.1		0	0															
2	5_O&M	1206					M024	7				Y	CHAPMAN AV		10/28/2005	13055	13056	MHR080001	MHQ090054	D/S	6347	SPQ090033	18	VCP			81	80.1		0	0															
2	5_O&M	1207					R045	2					LAMPSON AV		10/27/2005	12376	12377	MHT100050	MHU100001	D/S	5083	SPT100003	12	VCP			142	140.7		0	0															
2	5_O&M	1208					R041	16					SALERNO ST		10/4/2005	12623	12645	MHT100019	MHT100021	D/S	6470	SPT100046	8	VCP			150	155.2		0	0															
2	5_O&M	1209					S004	13					ANZIO AV		10/13/2005	12633	12634	MHT090022	MHT090023	D/S	5260	SPT090007	8	VCP		PRIVATE	380	221.4		0	0															
2	5_O&M	1210					R032	8					GARDEN GROVE BLVD		9/23/2005	12838	12837	MHQ120053	MHQ120051	D/S	5745	SPQ120051	10	VCP			220	223.7		0	0															
2	5_O&M	1211					M022	11					CHAPMAN AV		10/26/2005	13060	13055	MHR080022	MHR080001	D/S	6266	SPR080010	15	VCP			280	247.0		0	0															
2	5_O&M	1212					R037	2					BANGOR ST		9/28/2005	12143	12145	MHS090015	MHS090017	D/S	5906	SPS090030	8	VCP			290	290.0		0	0															
2	5_O&M	1213					R035	2					GARDEN GROVE BLVD		9/27/2005	12580	12581	MHQ120047	MHQ120048	D/S	6587	SPQ120034	10	VCP			293	292.4		0	0															
2	5_O&M	1214					R066	1					HARBOR BLVD		12/8/2005	13237	13238	MHR130027	MHR130028	D/S	6396	SPR130027	10	VCP			329	329.3		0	0															
2	5_O&M	1215					M022	7					CHAPMAN AV		10/26/2005	13032	13057	MHR090034	MHR090035	D/S	6276	SPR090033	15	VCP			353	353.8		0	0															
2	5_O&M	1216					R013	5					JACELENE LN		8/17/2005	13124	13125	MHQ080018	MHQ080019	D/S	5771	SPQ080037	8	VCP			350	356.5		0	0															
2	5_O&M	1217					G059	1					CHAPMAN AV		12/13/2005	12985	12986	MHQ090060	MHP090031	D/S	6280	SPQ090009	18	VCP			400	402.1		0	0															
2	5_O&M	1218					M022	9					CHAPMAN AV		10/26/2005	13058	13059	MHR090036	MHR090037	D/S	6233	SPR090026	15	VCP			434	433.6		0	0															
4	6_No_Defect	247					5	2239		7	2279	Y	PERDIDO		7/19/2006	9179	9178	MHM010019	MHM010017	U/S	4391	SPM010003	8	VCP			378	655.4		0	0						0	0			0					Multiple reaches were evaluated with one inspection. Lengths are different.	
4	6_No_Defect	248					5	2239		7	2279	Y	PERDIDO		7/19/2006	9180	9179	MHM010019	MHM010017	U/S	4392	SPM010004	8	VCP			284	655.4		0	0						0	0			0					Multiple reaches were evaluated with one inspection. Lengths are different.	
4	6_No_Defect	249					4	2215				Y	YARDLEY		6/30/2006			MHM000013	MHM000015	D/S		SPM00007	8	VCP			530	530.0		0	0						0	0			0					Multiple reaches were evaluated with one inspection. 49' to 174' not clear. Must revideo	
4	6_No_Defect	250					4	2215				Y	YARDLEY		6/30/2006			MHM000013	MHM000015	D/S		SPM00008	8	VCP			530	530.0		0	0						0	0			0					Multiple reaches were evaluated with one inspection. 49' to 174' not clear. Must revideo	
4	6_No_Defect	251					P COUNTY 3C	10				Y	GILBERT		10/12/2007	9341	9342	MHL020004	MHL030040	D/S	4057	SPL020004	8	VCP			124	523.7		0	0						0	0			0					Multiple reaches were evaluated with one inspection. High Water Level. Video is blurry. Unable to see any defect. Must Revideo.	
4	6_No_Defect	252					MIXED P COUNTY 1	11				Y	HARVEST		11/5/2007	9299	9292	MHM990030	MHM990023	D/S	3453	SPM990031	8	VCP			330	327.8		0	0						0	0			0					No Defect	
4	6_No_Defect	253					MIXED P COUNTY 2	4				Y	BANTA		11/3/2007	8971	8970	MHM040013	MHM040012	U/S	4410	SPM040036	8	VCP			290	286.8		0	0						0	0			0					No Defect	
4	6_No_Defect	254					17	2485				Y	GILBERT		1/25/2007	9285	9284	MHL000003	MHL000002	U/S	3439	SPL000005	8	VCP			260	268.2		0	0						0	0			0					No Defect. There is a MH @ 29.8'. GIS does not show this MH	
4	6_No_Defect	255					18	2					DIXIE		5/3/2007	9228	9233	MHM030006	MHM030016	U/S	3603	SPM030019	8	VCP			375	233.9		0	0						0	0			0					No Defect. This inspection does not have DVD. We used Inspection Report	
4	6_No_Defect	256					P COUNTY 3B	4				Y	SPAIN ST		10/17/2007	8941	8940	MHM030044	MHM020039	U/S	3654	SPM020043	6	VCP			90	141.8		0	0						0	0			0					Multiple reaches were evaluated with one inspection. No Defect	
4	6_No_Defect	257					P COUNTY 3B	4				Y	SPAIN ST		10/17/2007	8938	8941	MHM030044	MHM020039	U/S	4256	SPM020044	6	VCP			30	141.8		0	0						0	0			0					Multiple reaches were evaluated with one inspection. No Defect	
4	6_No_Defect	259					P COUNTY	12				Y	RANDOM		10/9/2007	9294	9118	MHM990025	COM990001	U/S	3445	SPM990023	8	VCP			110	119.4		0	0						0	0			0					No Defect	
4	6_No_Defect	260					MIXED P COUNTY 1	4	MIXED P COUNTY 1	5		Y	PACIFIC		11/15/2007	9272	9148	MHM030004	MHM030003	U/S	3642	SPM030029	8	VCP			180	183	6 2 6 1 1	16	31	2 1 23 3 1			30	43	1.43			1	0					Defects documented November 2007. Pipe replaced in 2008. Priority adjusted to No Defect.	
1	6_No_Defect	774				43		12					8042 Garden Grove Blvd.		4/22/2004			unmarked MH	COJ130001	DS		SPJ	8	VCP			357	357			0	0.00				0	0.00									
1	6_No_Defect	775				36		16					12701 Monroe St.		4/7/2004	7704	7703	MHJ110008	MHJ110006	US	736	SPJ110003	8	VCP			260	261			0	0.00				0	0.00									
1	6_No_Defect	776				36		15					8361 Cerulean Dr.		4/7/2004	7704	7091	MHJ110008	MHJ110007	US	825	SPJ110016	8	VCP			381	385			0	0.00				0	0.00									
1	6_No_Defect	777				37		3					8358 Stanford Ave.		4/8/2004	7706	7709	MHJ120023	MHJ120024	DS	739	SPJ120015	8	VCP			270	271			0	0.00				0	0.00									
1	6_No_Defect	778				36		17					8451 Stanford Ave.		4/7/2004	7651	7705	MHJ120021	MHJ120022	DS	826	SPJ120022	8	VCP			259	262			0	0.00				0	0.00									
1	6_No_Defect	779				43		6					8412 Garden Grove Blvd.		4/21/2004	7716	7717	MHJ130001	MHJ130002	DS	749	SPJ130003	8	VCP			332	332			0	0.00				0	0.00									
1	6_No_Defect	780				43		7					8342 Garden Grove Blvd.		4/21/2004	7717	7718	MHJ130002	MHJ130003	DS	750	SPJ130004	8	VCP			331	331			0	0.00				0	0.00									
1	6_No_Defect	781				43		15					8232 Garden Grove Blvd.		4/22/2004	7718	7719	MHJ130003	MHJ130004	DS	783	SPJ130005	8	VCP			331	332			0	0.00				0	0.00									
1	6_No_Defect	782		X		40		23					8222 Larson Ave.		4/15/2004	7050	7049	MHJ130016	MHJ130015	US	789	SPJ130010	6	VCP			30	34			0	0.00				0	0.00									
1	6_No_Defect	783				42		1					8092 Larson Ave.		4/16/2004	7056	7057	MHJ130022	MHJ130023	DS	796	SPJ130017	8	VCP			15	63			0	0.00				0	0.00									
1	6_No_Defect	784				45		1					8150 Garden Grove Blvd.		4/28/2004	7103	7104	MHJ130005	MHJ130006	DS	841	SPJ130021	8	VCP			158	132			0	0.00				0	0.00									
1	6_No_Defect	785				43		14					Coast St./Garden Grove Blvd.		4/22/2004	7104	13421	MHJ130006	MHJ130007	DS	6841	SPJ130022	10	VCP			306	308			0	0.00				0	0.00								The second pipe ID represents two current pipe IDs.	
1	6_No_Defect	786				43		14					Coast St./Garden Grove Blvd.		4/22/2004	13420	7105	MHJ130006	MHJ130007	DS	6842	SPJ130022	10	VCP			306	308			0	0.00				0	0.00								The second pipe ID represents two current pipe IDs.	
1	6_No_Defect	787				43		2					Easement/13062 Coast St.		4/21/2004	7105	7111	MHJ130007	MHJ130029	US	751	SPJ130029	8	VCP			50	53			0	0.00				0	0.00									
1	6_No_Defect	788		X		35		25					8002 Central Ave.		4/13/2004	7108	7048	MHJ140005	MHJ140004	US	673	SPJ140001	8	VCP			330	317			0	0.00				0	0.00									
1	6_No_Defect	789				35		21					8172 Central Ave.		4/12/2004	7046	7725	MHJ140002	MHJ140006	US	676	SPJ140004	8	VCP			82	88			0	0.00				0	0.00									
1	6_No_Defect	790				39		8					13252 Monroe St.		4/13/2004	7071	7072	MHJ140017	MHJ140018	DS	809	SPJ140018	8	VCP			379	382			0	0.00				0	0.00									
1	6_No_Defect	791		X		38		18					13441 Coast St.		4/13/2004	7114	7115	MHJ140026	MHJ150006	DS	754	SPJ140034	8	VCP			229	228			0	0.00				0	0.00									
1	6_No_Defect	792				39		3					13291 Coast St.		4/13/2004	7116	7117	MHJ140030	MHJ140034	DS	755	SPJ140035	10	VCP			254	261			0	0.00				0	0.00									
1	6_No_Defect	793				45		2					13331 Coast St.		4/28/2004			MHJ140034	MHJ140035	DS		SPJ140036	10	VCP			151	151			0	0.00				0	0.00									
1	6_No_Defect	794				45		4					Easement/Coast St.		4/28/2004			MHJ140036	MHJ150007	DS		SPJ140038	10	VCP			297	297			0	0.00				0	0.00									
1	6_No_Defect	795		X		40		32					Trask Ave./Sunnyvale		4/16/2004	7069	7070	MHJ150002	MHJ150003	DS	768	SPJ150002	8	VCP			250	250			0	0.00				0	0.00									
1	6_No_Defect	796		X		42		25					8032 Trask Ave.		4/20/2004	7115	7121	MHJ150006	MHJ150008	DS	775	SPJ150005	8	VCP			132	132			0	0.00				0	0.00									
1	6_No_Defect	797				45		6					Crosswalk-Trusk/Beach		4/28/2004			MHJ150008	MHJ150007	DS		SPJ150006	8	VCP			28	28			0	0.00				0	0.00									
1	6_No_Defect	798				25		16					12551 Agnes Stanley St.		3/18/2004	8381	8382	MHK110008	MHK110010	DS	3353	SPK110007	8	VCP			245	259			0	0.00				0	0.00									
1	6_No_Defect	799				27		5					8882 Ann Cross Dr.		3/22/2004	8383	8384	MHK110012	MHK110013	DS	3357	SPK110011	8	VCP			300	287			0	0.00				0	0.00									
1	6_No_Defect	800		X		32		9					12711 Aristocrat Ave.		3/31/2004	8385	8386	MHK110014	MHK120001	DS	3359	SPK110013	8	VCP			85	85			0	0.00				0	0.00									
1	6_No_Defect	801				25		14					8932 Mary Hill Dr.		3/18/2004	8403	8370	MHK110007	MHL110002	US	3379	SPK110021	8	VCP			190	192			0	0.00				0	0.00									
1	6_No_Defect	802				25		17					8972 Ernest Fulsom Dr.		3/18/2004	8371	8404	MHL110003	MHK110009	DS	3380	SPK110022	8	VCP			190	190			0	0.00				0	0.00									
1	6_No_Defect	803				25		20					8972 Ann Cross Dr.		3/18/2004	8372	8405	MHL110004	MHK110011	DS	3381	SPK110023	8	VCP			195	196			0	0.00				0	0.00									
1	6_No_Defect	804		X		33		26					12551 Lorna St.		4/2/2004	8408	8407	MHK110017	MHK110016	US	3385	SPK110025	8	VCP			316	315			0	0.00				0	0.00									
1	6_No_Defect	805		X		34		3					12750 Lorna St.		4/2/2004	8411	8410	MHK120020	MHK110019	US	3388	SPK110028	8	VCP			316	318			0	0.00				0	0.00									
1	6_No_Defect	806				32		27					12536 Adelle St.		4/2/2004	8415	8416	MHK110020	MHK110021	DS	3393	SPK110029	8	VCP			267	267			0	0.00				0	0.00									
1	6_No_Defect	807	2017-05-30			35		3					12641 Louise Cr.		4/2/2004	8418	8419	MHK110023	MHK110024	DS	3396	SPK110032	8	VCP			175	166			0	0.00				0	0.00								Found that there was no cookie in the pipe at the upstream end of a terminal manhole so we installed one.	
1	6_No_Defect	808		X		35		1					12611 Trinette		4/2/2004	8419	8420	MHK110024	MHK110025	DS	3397	SPK110033	8	ACP			170	177			0	0.00				0	0.00									

Appendix D-3

Phase	Priority	Ranking	Repair Completion Date	2018_Project	Contractor	Tape No.	DVD No.	Inspection No.	Reversal Tape No.	Reversal DVD No.	Reversal Inspec. No.	DVD Watched? (Y)	Location	Street Name	CCTV Date	Existing MH ID Start	Existing MH ID End	Previous MH ID Start	Previous MH ID End	Direction of Camera	Pipe Existing Sewer ID	Pipe Previous Sewer ID	Pipe Size (in)	Pipe Material	Pipe Joint Length (ft)	GIS Comment	Length (ft)	CCTV Length (ft)	Structural Defect Coding	PACP Quick Struct Rating	Total Structural Defects	Total Structural Defect Score	Structural Defect Index	Operational and Maintenance	PACP Quick Maint Rating	Total O&M Defects	Total O&M Defect Score	O&M Defect Index	Construction Features	Miscellaneous	Total Construction Features	Reasons for Survey Aband	GIS Identified Abandoned	Repair Description	Comments	Recommendations
1	6_No_Defect	809		X		35		5					12591 Adelie St.		4/2/2004	8420	8421	MHK110025	MHK110026	DS	3398	SPK110034	8	VCP			350	350			0	0	0.00			0	0	0.00								
1	6_No_Defect	810				32		17					8841 Woolley Ln.		4/1/2004	8388	8387	MHK120003	MHK120002	US	3361	SPK120005	8	VCP			75	79			0	0	0.00			0	0	0.00								
1	6_No_Defect	811				32		20					8802 Acacia Ave.		4/1/2004	8392	8391	MHK120007	MHK120006	US	3365	SPK120009	8	VCP			301	301			0	0	0.00			0	0	0.00								
1	6_No_Defect	812				42		10					12881 Josephine St.		4/19/2004	8399	8400	MHK120016	MHK120017	DS	3373	SPK120017	8	VCP			165	165			0	0	0.00			0	0	0.00								
1	6_No_Defect	813				32		22					8972 Acacia Ave.		4/1/2004	8373	8394	MHK120009	MHK120010	DS	3382	SPK120019	8	VCP			255	255			0	0	0.00			0	0	0.00								
1	6_No_Defect	814	2018-02-23	X		34		7					12870 Lorna St.		4/2/2004	8444	8406	MHK120023	COK120022	US	3384	SPK120021	8	VCP			330	136			0	0	0.00			0	0	0.00							Replaced 4' of 8" VCP main in 2 pieces to get under the re-routed water service line.		
1	6_No_Defect	815		X		35		8					12731 Adelie St.		4/2/2004	8423	8424	MHK120025	MHK120026	DS	3401	SPK120027	8	VCP			332	332			0	0	0.00			0	0	0.00								
1	6_No_Defect	816				34		16					8561 Stanford Ave.		4/5/2004	8429	8428	MHK120031	MHK120030	US	3406	SPK120032	8	VCP			89	89			0	0	0.00			0	0	0.00								
5	6_No_Defect	816			PPT		MAP 4-B2-2	1		MAP 4-B2-3	18		WARD STREET		9/21/2012	7313	7314	MHO220017	MHO220018	D/S	156	SPO220025	8	VCP			138	1.3		0000	0	0	0.00		0000	0	0	0.00		2					1.3' MSA (SIPHON) & 0.1' From D/S MH MSA (SIPHON). Inspection couldn't completed.	
1	6_No_Defect	817				34		4					8734 Stanford Ave.		4/2/2004	0	0	MHK120020	MHK120019	US	2977	SPK120041	8	VCP			140	203			0	0	0.00			0	0	0.00								
5	6_No_Defect	817			PPT		MAP 3-2	11		MAP 3-2	12	Y	WAKEFIELD AVE		7/24/2012	12791	13157	MHP060002	MHP060003	D/S	6607	SPP060004	8	VCP			192	4.7		0000	0	0	0.00		0000	0	0	0.00		2					4.7' MSA (SIPHON).Also 0' From D/S MH MSA (SIPHON). Inspection Couldn't Completed. Inspection Report Shows Both side 100' inspection. We corrected them.	
1	6_No_Defect	818				29		10					8750 Brookdale Ave.		3/29/2004	11555	11556	MHL130032	MHK130013	DS	3091	SPK130001	8	VCP			152	156			0	0	0.00			0	0	0.00								
1	6_No_Defect	819				29		15					8750 Oakdale Dr.		3/29/2004	11560	11621	MHL130036	MHK130018	DS	3095	SPK130002	8	VCP			175	177			0	0	0.00			0	0	0.00								
5	6_No_Defect	819			PPT		MAP 3-B5	24		MAP 3-B5	25		EUCLID STREET		9/6/2012	11894	11895	MHP130007	MHP130006	U/S	4445	SPP130028	8	VCP			26	20		0000	0	0	0.00		0000	0	0	0.00		2					10' From both MH MSA (SIPHON). Inspection Couldn't completed	
1	6_No_Defect	820				29		16					13051 Yockey St.		3/29/2004	11598	11599	MHK130011	MHK130012	DS	2966	SPK130010	8	VCP			55	60			0	0	0.00			0	0	0.00								
5	6_No_Defect	820			PPT		MAP 4-B1-6	5		MAP 4-B1-6	6		HARBOR BLVD		10/3/2012	7543	7542	MHR150015	MHR150014	U/S	593	SPR150013	12	VCP			32	30		0000	0	0	0.00		0000	0	0	0.00		2					15' From both MH MSA (SIPHON). Inspection couldn't completed	
1	6_No_Defect	821				29		18					13111 Yockey St.		3/29/2004	11600	11601	MHK130014	MHK130015	DS	2968	SPK130012	8	VCP			50	56			0	0	0.00			0	0	0.00								
5	6_No_Defect	821			PPT		MAP 2 July-1	11		MAP 2 July-1	15		MACNAB STREET		6/19/2012	10308	10298			U/S	3883 SIPHON		8	VCP			300	30		0000	0	0	0.00		0000	0	0	0.00		2					15' MSA (SIPHON) & 15' From U/S MH MSA (SIPHON). Inspection Couldn't Completed	
1	6_No_Defect	822				44		6					13172 Yockey St.		4/23/2004	11603	11602	MHK130017	MHK130016	US	2970	SPK130014	8	VCP			145	141			0	0	0.00			0	0	0.00								
5	6_No_Defect	822			PPT		MAP 3-B5	38					WEST STREET		9/4/2012	12901	11636	MHR120001	MHR120050	D/S	5861	SPR120057	12	VCP			8	4		0000	0	0	0.00		0000	0	0	0.00								
1	6_No_Defect	823				35		14					13167 Newland		4/12/2004	7657	7658	MHK130029	MHK130030	DS	695	SPK130031	8	VCP			160	151			0	0	0.00			0	0	0.00								
5	6_No_Defect	823			PPT		MAP 3-B5	11					NELSON STREET		9/13/2012	13424	11327			D/S	6847	new	10	VCP			5	5		0000	0	0	0.00		0000	0	0	0.00								
1	6_No_Defect	824				35		15					13171 Newland		4/12/2004	7658	7659	MHK130030	MHK130031	DS	696	SPK130032	8	VCP			100	96			0	0	0.00			0	0	0.00								
5	6_No_Defect	824			PPT		MAP 3-B3-4	26					NEWHOPE STREET		8/29/2012	13176	13175	MHQ140040	MHQ140042	D/S	5624	SPQ140049	8	VCP			12	5.1		0000	0	0	0.00		0000	0	0	0.00								
1	6_No_Defect	825				41		10					8612 Garden Grove Blvd.		4/20/2004	7668	7669	MHK130032	MHK130033	DS	706	SPK130034	8	VCP			331	336			0	0	0.00			0	0	0.00								
5	6_No_Defect	825			PPT		MAP 3-B4-2	21					GARDEN GROVE BLVD		9/24/2012	12897	12898	MHR120049	MHR120053	D/S	5818	SPR120056	24	VCP			3	6.7		0000	0	0	0.00		0000	0	0	0.00								
1	6_No_Defect	826				43		4					8562 Garden Grove Blvd.		4/21/2004	7669	7670	MHK130033	MHK130034	DS	707	SPK130035	8	VCP			334	331			0	0	0.00			0	0	0.00								
5	6_No_Defect	826			PPT		MAP 2-1-1	7					LAMPSON AVE		7/6/2012	9036	13623			D/S	7141	new	12	VCP			14	6.7		0000	0	0	0.00		0000	0	0	0.00								
1	6_No_Defect	827				40		16					13081 Wilson St.		4/15/2004	7675	7674	MHK130039	MHK130038	US	711	SPK130039	8	VCP			219	218			0	0	0.00			0	0	0.00								
5	6_No_Defect	827			PPT		MAP 4-B3	16					CHAPMAN AVE		9/26/2012	14281	10051			U/S	7961	new	15	VCP			10	7		0000	0	0	0.00		0000	0	0	0.00								
1	6_No_Defect	828				40		15					13111 Wilson St.		4/15/2004	7676	7675	MHK130040	MHK130039	US	712	SPK130040	8	VCP			220	221			0	0	0.00			0	0	0.00								
5	6_No_Defect	828			PPT		MAP 3-B3-4	27					NEWHOPE STREET		8/29/2012	11449	13176	MHQ140001	MHQ140040	D/S	5698	SPQ140052	8	VCP			7	7		0000	0	0	0.00		0000	0	0	0.00								
1	6_No_Defect	829		X		29		20					13371 Hale Ave.		3/29/2004	11577	11576	MHK140005	MHK140004	US	2953	SPK140001	8	VCP			190	190			0	0	0.00			0	0	0.00								
5	6_No_Defect	829			PPT		MAP 4-B3	4					GARDEN GROVE BLVD		9/26/2012	8443	9392	MHK130010	MHK130045	D/S	2976	SPK130023	8	VCP			10	7.2		0000	0	0	0.00		0000	0	0	0.00								
1	6_No_Defect	830				31		23					13272 Yockey St.		3/31/2004	11606	11607	MHK140001	MHK140002	DS	7885	SPK140004	8	VCP			35	33			0	0	0.00			0	0	0.00								
5	6_No_Defect	830			PPT		MAP 2-2-2	15					TRASK AVENUE		7/20/2012	8362	7885	MHK150903	MHK150009	D/S	2447	SPK150903	12	Clay Tile			4	7.7		0000	0	0	0.00		0000	0	0	0.00								
1	6_No_Defect	831				39		15					8651 Gloria Ave.		4/15/2004	7636	7634	MHK140016	MHK140014	US	681	SPK140009	8	VCP			215	222			0	0	0.00			0	0	0.00								
5	6_No_Defect	831			PPT		June Map 1	4					SPRINGDALE STREET		6/7/2012	8757	8758	MHF100027	MHF100028	D/S	1965	SPF100002	10	VCP			10	9		0000	0	0	0.00		0000	0	0	0.00								
1	6_No_Defect	832				39		17					13381 Sheppard Cr.		4/15/2004	7635	7636	MHK140015	MHK140016	DS	992	SPK140010	8	VCP			220	221			0	0	0.00			0	0	0.00								
5	6_No_Defect	832			PPT		June Map 1	12					WESTERN AVE EASEMENT		6/14/2012	7129	7130	COI080003	COI080004	U/S	778	SPI080004	6	VCP			420	9.7		0000	0	0	0.00		0000	0	0	0.00		1	1					
1	6_No_Defect	833				39		16					8651 Gloria Ave.		4/15/2004	7636	7637	MHK140016	MHK140017	DS	993	SPK140011	8	ACP			215	202			0	0	0.00			0	0	0.00								
5	6_No_Defect	833			PPT		MAP 4-B3	1					MAGNOLIA STREET		9/26/2012	11591	11597	MHL150004	MHL150005	D/S	3031	SPL150034	18	VCP			20	10		0000	0	0	0.00		0000	0	0	0.00								
1	6_No_Defect	834		X		39		18					Gloria Awe. Easement		4/15/2004	7638	7637	MHK140018	MHK140017	US	994	SPK140012	8	VCP			50	41			0	0	0.00			0	0	0.00								
5	6_No_Defect	834			PPT		MAP 2-2-2	13					TRASK AVENUE		7/20/2012	8360	8361	MHK150901	MHK150902	D/S	2445	SPK150901	12	Clay Tile			8	10.2		0000	0	0	0.00		0000	0	0	0.00								
1	6_No_Defect	835				41		11					8598 Edgebrook Dr.		4/21/2004	7647	7648	MHK140024	MHK140025	DS	1002	SPK140016	8	VCP			106	106			0	0	0.00			0	0	0.00								
5	6_No_Defect	835			PPT		MAP 3-B5	17					NELSON STREET		9/6/2012	13390	13391			D/S	6811	SPO120029	8	VCP			12	11.4		0000	0	0	0.00		0000	0	0	0.00								
1	6_No_Defect	836		X		41		12					8589 Edgebrook Dr.		4/21/2004	0	0	MHK140025	MHK140026	DS	1003	SPK140017	8	VCP			184	182			0	0	0.00			0	0	0.00								
5	6_No_Defect	836			PPT		MAP 4-B1-5	5					BROOKHURST STREET		9/26/2012	10527	11366	MHN170020	MHN170909	D/S	3069	SPN170903	8	VCP			4	12		0000	0	0	0.00		0000	0	0	0.00								
1	6_No_Defect	837				41		13					8523 Edgebrook Dr.		4/21/2004	0	0	MHK140026	MHK140027	DS	688	SPK140018	8	VCP			124	127			0	0	0.00			0	0	0.00								
5	6_No_Defect	837			PPT		MAP 4-B1-5	6					BROOKHURST STREET		9/26/2012	10523	11369	MHN160018	MHN160902	D/S	2756	SPN160903	8	VCP			204	12		0000	0	0	0.00		0000	0	0	0.00								
1	6_No_Defect	838				39		10					Newland St.		4/15/2004	7660	7661	MHK140009	MHK140010	DS	698	SPK140024	8	VCP			296	301			0	0	0.00			0	0	0.00								
5	6_No_Defect	838			PPT		MAP 3-B4-2	7					HARBOR BLVD		10/3/2012	7015	12784			D/S	7662	new	8	VCP			14	12		0000	0	0	0.00		0000	0	0	0.00								
1	6_No_Defect	839				39		11					13252 Newland		4/15/2004	7661	7662	MHK140010	MHK140011	DS	699	SPK140025	8	VCP			30	34			0	0	0.00			0	0	0.00								
5	6_No_Defect	839			PPT		MAP 3-B4-2	22					GARDEN GROVE BLVD		9/24/2012	13661	12897			D/S	7182	new	24	VCP			9	12.2		0000	0	0	0.00		0000	0	0	0.00								
1	6_No_Defect	840				39		21					13456 Newland		4/15/2004				MHK150007A	MHK150007B	DS		SPK140029-A	8	PVC			65	65			0	0	0.00			0	0	0.00								
5	6_No_Defect	840			PPT		MAP 4-B3	10					TRASK AVE		9/26/2012	11525	14108			D/S	8238	new	21	VCP			7	12.3		0000	0	0	0.00		0000	0	0	0.00								
1	6_No_Defect	841				41		14					8521 Edgebrook Dr.		4/21/2004	0	0	MHK140027	MHK140028	DS	834	SPK140039	8	VCP			57	55			0	0	0.00			0	0	0.00								
5	6_No_Defect	841			PPT		MAP 4-B3	6					CHAPMAN AVE		9/26/2012	10051	13884			D/S	7510	new	12	PVC			25	12.7		0000	0	0	0.00		0000	0	0	0.00								
1	6_No_Defect	842				45		31					13471 Trask Ave.		5/5/2004	11611	11402	MHK150001	MHK150008	DS	3025	SPK150005	12	VCP			10	13			0	0	0.00			0	0	0.00								
5	6_No_Defect	842			PPT		MAP 4-B3	8					CHAPMAN AVE		9/26/2012	14281	13884			D/S	7941	new	15	VCP			23	13		0000	0	0	0.00		0000	0	0	0.00								
1	6_No_Defect	843				40		2					13640 Yockey St.		4/14/2004	11616	11618	MHK150013	MHK150015	DS	2792	SPK150006	8	VCP			50	51			0	0	0.00			0	0	0.00								
5	6_No_Defect	843			PPT		June Map 2 B1	34					PACIFIC AVE		6/8/2012	8355	8356	MHL030016	MHK030001	D/S	5517	SPK030001	8	VCP			15	15		0000	0	0	0.00		0000	0	0	0.00								
1	6_No_Defect	844				40		8					8712 Enloe Cir.		4/14/2004	11617	11087	MHK150014	COK150001	US	2793	SPK150007	8	PVC			90	91			0	0	0.00			0	0	0.00								
5	6_No_Defect	844			PPT		MAP 3-B3-3	26					TAFT STREET		8/22/2012	12299	12298	MHO150008	MHO140023	U/S	3945	SPO140010	8	VCP			20	15.2		0000	0	0	0.00		0000	0	0	0.00								
1	6_No_Defect	845				40		9					8712 Enloe Cir.		4/14/2004	11617	11618	MHK150014	MHK150015	DS	2794	SPK150008	8	PVC			132	131			0	0	0.00			0	0	0.00		1						
5	6_No_Defect	845			PPT		MAP 4-B1-5	4					NEWHOPE STREET		9/26/2012	6772	11482			U/S	6696	new	8	VCP			16	15.8		0000	0	0	0.00		0000	0	0	0.00								
1	6_No_Defect	846				40		5					13562 Yockey St.		4/14/2004	0	0	MHK150016	MHK15016-A	DS	2796	SPK150010	8	VCP			174	114			0	0	0.00			0	0	0.00								
5	6_No_Defect	846			PPT		MAP 3-B4-2	6					JACALENE LANE		10/3/2012	14345	13217			D/S	8021	new	8	VCP			13	17.2		0000	0	0	0.00		0000	0	0	0.00								
1	6_No_Defect	847				40		6					13551 Yockey St.		4/14/2004				MHK150016-A	MHK15016-B	DS		SPK150010-A	8	VCP			110	110			0	0	0.00			0	0	0.00								
5	6_No_Defect	847			PPT		MAP 3-B4-2	4					KATHY LANE		10/3/2012	14343	13219			D/S	8023	new	8	VCP			13	17.8		0000	0	0	0.00		0000	0	0	0.00								

Appendix D-3

| Phase | Priority | Ranking | Repair Completion Date | 2018_Project | Contractor | Tape No. | DVD No. | Inspection No. | Reversal Tape No. | Reversal DVD No. | Reversal Inspec. No. | DVD Watched? (Y) | Location | Street Name | CCTV Date | Existing MH ID Start | Existing MH ID End | Previous MH ID Start | Previous MH ID End | Direction of Camera | Pipe Existing Sewer ID | Pipe Previous Sewer ID | Pipe Size (in) | Pipe Material | Pipe Joint Length (ft) | GIS Comment | Length (ft) | CCTV Length (ft) | Structural Defect Coding: Crack C L | C | M | S | H | Fracture F L | C | M | S | H | Broken B SV | VV | Hole H SV | VV | Joint J O S | M | L | S | M | L | A | Deformed D V | H | Collapsed Pipe D X P | Surface Damage S | Lining Failure LF | Point Repair RP | Slope S | WL | PACP Quick Struct Rating | Total Structural Defects | Total Structural Defect Score | Structural Defect Index | Operational and Maintenance: Deposits AGS | Roots (R) AE B | % | AE L | % | Other Z | % | Fine (F) B | L | J | C | Tap (T) B | L | J | C | Medium (M) B | L | J | C | Ball (B) B | L | J | C | Infiltration I G | D | R | W | Obstacles OB C | Z | Other % | C | Vermin V R | PACP Quick Maint Rating | Total O&M Defects | Total O&M Defect Score | O&M Defect Index | Construction Features: Tap (Lateral) T FD | FL | BI | BD | Line L D | L | U | R | LD | RD | Intruding Seal Material IS SRH | SRB | SRL | Z | Miscellaneous M SA | CU | MC | Total Construction Feature | Reasons for Survey Aborted | GIS Identified Abandoned | Repair Description | Comments | Recommendations |
|---|---|---

Appendix D-3

| Phase | Priority | Ranking | Repair Completion Date | 2018_Project | Contractor | Tape No. | DVD No. | Inspection No. | Reversal Tape No. | Reversal DVD No. | Reversal Inspec. No. | DVD Watched? (Y) | Location | Street Name | CCTV Date | Existing MH ID Start | Existing MH ID End | Previous MH ID Start | Previous MH ID End | Direction of Camera | Pipe Existing Sewer ID | Pipe Previous Sewer I.D. | Pipe Size (in) | Pipe Material | Pipe Joint Length (ft) | GIS Comment | Length (ft) | CCTV Length (ft) | Structural Defect Coding: Crack C L | C M | S H | Fracture F L | C M | S H | Broken B SV | Hole H VV | Joint J SV O VV S | J M L | S M L | J A | Deformed D V | Collapsed Pipe X H | P | Surface Damage S | Lining Failure LF | Point Repair RP | Sags S | WL | PACP Quick Struct Rating | Total Structural Defects | Total Structural Defect Score | Structural Defect Index | Operational and Maintenance: Deposits AGS | Roots (R) Fine (F) AE B | % | AE D L | % | Other Z | % | Tap (T) B | L | J | Medium (M) C | B | L | J | Ball (B) C | B | L | J | C | Infiltration I G | D | R | W | Obstacles OB C | Z | Other % | C | Vermin V R | PACP Quick Maint Rating | Total O&M Defects | Total O&M Defect Score | O&M Defect Index | Construction Features: Tap (Lateral) T FD | FL | BI | BD | Line L D | L | U | R | LD | RD | Intruding Seal Material IS SRH | SRB | SRL | Z | Miscellaneous M SA | CU | MC | Total Construction Feature | Reasons for Survey Aband | GIS Identified Abandoned | Repair Description | Comments | Recommendations |
|---|---|---

Appendix D-3

| Phase | Priority | Ranking | Repair Completion Date | 2018_Project | General | | | | | | | | | | | | | | | | | | Existing MH ID | | Previous MH ID | | Direction of Camera | Pipe | | | | | | | | | | | | | | | | | |

Phase	Priority	Ranking	2018_Project	Contractor	Tape No.	DVD No.	Inspection No.	DVD Watched? (Y)	Location – Street Name	CCTV Date	Existing MH ID Start	Existing MH ID End	Previous MH ID Start	Previous MH ID End	Direction of Camera	Existing Sewer ID	Previous Sewer ID.	Size (in)	Material	Joint Length (ft)	Length (ft)	CCTV Length (ft)	PACP Quick Struct Rating	Total Structural Defects	Total Structural Defect Score	Structural Defect Index	PACP Quick Maint Rating	Total O&M Defects	Total O&M Defect Score	O&M Defect Index	Tap (Lateral) BI	Tap (Lateral) BD	Miscellaneous SA	Miscellaneous MC	Reasons for Survey Abandoned	Comments	Recommendations
5	6_No_Defect	934		PPT		MAP 4-B2-2	10		ROXEY DRIVE	9/19/2012	14165	7441			D/S	7853	new	8	VCP		129	131.9	0000	0	0	0.00	0000	0	0	0.00							
1	6_No_Defect	935			25		3		9792 Central Ave.	3/17/2004	10768	10710	MHM130033	MHM140001	US	2347	SPM140023	6	VCP		150	130			0	0.00			0	0.00							
3	6_No_Defect	935		PPT		52	3		ANTHONY AVE	12/22/2007	7948	7949	MHD120007	MHD120008	D/S	1798	SPD120001	12	VCP		295	296		0	0	0.00		0	0	0.00							
5	6_No_Defect	935		PPT		MAP 4-B2-2	44		TREVA CIRCLE	9/10/2012	11052	11051	MHL150034	MHL150033	U/S	2474	SPL150022	8	VCP		135	132.8	0000	0	0	0.00	0000	0	0	0.00							
3	6_No_Defect	936		PPT		52	5		ANTHONY AVE	12/22/2007	7950	7951	MHD120009	MHD120010	D/S	1552	SPD120003	12	VCP		158	159		0	0	0.00		0	0	0.00	1						
5	6_No_Defect	936		PPT		MAP 4-B1-6	23		CARDINAL CIR	9/28/2012	13648	13647			D/S	7161	new	8	VCP		128	134	0000	0	0	0.00	0000	0	0	0.00							
1	6_No_Defect	937	X		24		22		9351 Imperial	3/18/2004	12070	12069	MHM140008	MHM140007	US	2508	SPM140031	8	VCP		150	152			0	0.00			0	0.00							
3	6_No_Defect	937		PPT		52	6		BAILEY ST	12/22/2007	7952	7820	MHD120011	MHD120021	D/S	1715	SPD120013	12	VCP		259	260		0	0	0.00		0	0	0.00							
5	6_No_Defect	937		PPT		MAP 4-B1-6	9		DEANANN PLACE	10/3/2012	7267	7266	MHN180013	MHN180012	U/S	139	SPN180002	8	VCP		133	135	0000	0	0	0.00	0000	0	0	0.00							
1	6_No_Defect	938			24		20		13321 Shapell	3/18/2004	12073	12075	MHM140010	MHM140012	DS	2511	SPM140034	8	VCP		258	260			0	0.00			0	0.00							
3	6_No_Defect	938		PPT		52	7		BAILEY ST	12/22/2007	7820	7829	MHD120021	MHE120002	D/S	1792	SPE120025	12	VCP		225	222		0	0	0.00		0	0	0.00							
5	6_No_Defect	938		PPT		MAP 3-B4-1	14		PARTRIDGE STREET	9/4/2012	14608	14609			D/S	8371	new	8	PVC		135	136	0000	0	0	0.00	0000	0	0	0.00							
1	6_No_Defect	939			24		25		13370 Shapell	3/18/2004	12075	12077	MHM140012	MHM140014	DS	2513	SPM140036	8	VCP		258	258			0	0.00			0	0.00							
3	6_No_Defect	939		PPT		50	15		VALLEY VIEW ST	12/20/2007	8809	8808	MHE080003	MHE080002	U/S	1260	SPE080009	8	VCP		350	354		0	0	0.00		0	0	0.00							
5	6_No_Defect	939		PPT		MAP 4-B1-6	21		CARDINAL CIR	9/28/2012	13646	13645			D/S	7163	new	8	VCP		136	138.1	0000	0	0	0.00	0000	0	0	0.00							
1	6_No_Defect	940			24		26		13420 Shapell	3/18/2004	12077	12079	MHM140014	MHM140016	DS	2515	SPM140038	8	VCP		353	255			0	0.00			0	0.00							
3	6_No_Defect	940		GGSD		34	1134	Y	SANTA BARBARA ALLEY	4/14/2005	8892	8891	MHE080016	MHE080015	U/S	1333	SPE080019	8	VCP		332	332		0	0	0.00		0	0	0.00	2						
5	6_No_Defect	940		PPT		MAP 3-B2-6	4		DUNKLEE AVE	8/30/2012	12378	12362	MHT120011	COT120003	U/S	5438	SPT120003	8	VCP		150	138.3	0000	0	0	0.00	0000	0	0	0.00						U/S MH is CO	
1	6_No_Defect	941			29		7		9560 Trask Ave.	3/26/2004	12018	12067	MHM150005	MHM150006	DS	2874	SPM150020	18	VCP		270	277			0	0.00			0	0.00							
3	6_No_Defect	941		GGSD		34	1126	Y	BAILEY ALLEY	4/13/2005	8893	8892	MHE080017	MHE080016	U/S	1334	SPE080020	8	VCP		172	172		0	0	0.00		0	0	0.00							
5	6_No_Defect	941		PPT		MAP 4-B1-2	1		ANCHOR AVE	9/10/2012	7219	7218			U/S	7218		8	VCP		143	142.7	0000	0	0	0.00	0000	0	0	0.00							
1	6_No_Defect	942			3		6		12091 Nutwood St.	2/5/2004	11158	11159	MNW24033	MNW24034	DS	2577	SPN090003	8	VCP		34	31			0	0.00			0	0.00							
3	6_No_Defect	942		GGSD		P6	1		CHAPMAN	12/1/2007	8899	14581	MHE080021	MHE080022	D/S	1737	SPE080023	8	VCP		410	322		0	0	0.00		0	0	0.00		1					
5	6_No_Defect	942		PPT		MAP 4-B2-2	19		MAYS AVENUE	9/13/2012	11056	6978	MHL150038	MHL150037	U/S	2478	SPL150026	8	VCP		148	144.6	0000	0	0	0.00	0000	0	0	0.00						Same Inspection Map 4-B2-2 # 33. Use this & delete other one	
1	6_No_Defect	943	X		1		13		12031 Faye Ave.	2/4/2004	11272	11073	MNW23015	CNW23913	US	2554	SPN090013	8	VCP		205	88			0	0.00			0	0.00			1		capped off		
3	6_No_Defect	943		GGSD		35	1139		CHAPMAN	4/21/2005	8906	8907	MHE080022	MHE080023	D/S	1338	SPE080024	8	VCP		163	160		0	0	0.00		0	0	0.00							
5	6_No_Defect	943		PPT		MAP 3-B3-3	11		SAFFORD STREET	8/27/2012	11474	11475	MHQ140031	MHQ140032	D/S	3827	SPQ140012	8	VCP		160	149	0000	0	0	0.00	0000	0	0	0.00							
1	6_No_Defect	944			3		23		10371 Mahalo Wy.	2/6/2004	11267	11268	MNW14044	MNW14045	DS	2552	SPN100029	8	VCP		123	259			0	0.00			0	0.00							
3	6_No_Defect	944		GGSD		35	1138		BELGRAVE ALLEY	4/21/2005	8906	8905	MHE080022	MHE090011	U/S	1337	SPE090015	8	VCP		134	133		0	0	0.00		0	0	0.00							
5	6_No_Defect	944		PPT		MAP 4-B1-2	7		MELRIC AVE	9/10/2012	7305	7306	MHO210016	MHO210017	D/S	394	SPO210017	8	VCP		162	154	0000	0	0	0.00	0000	0	0	0.00							
1	6_No_Defect	945			3		24		10421 Mahalo Wy.	2/6/2004	11268	11220	MNW14045	MNW13033	DS	2921	SPN100032	8	VCP		50	258			0	0.00			0	0.00							
3	6_No_Defect	945		GGSD		29	1022		SANTA CATALINA	1/18/2005	7836	7837	MHE080024	MHD080001	D/S	1448	SPD080002	8	VCP		298	295		0	0	0.00		0	0	0.00						No Defect	
5	6_No_Defect	945		PPT		MAP 4-B1-2	3		REEVE STREET	9/10/2012	6875	6876	MHO220025	MHO220026	D/S	7	SPO220014	8	VCP		132	154.4	0000	0	0	0.00	0000	0	0	0.00							
1	6_No_Defect	946			5		16		12551 Kengsington Ln.	2/10/2004	11257	11255	MHN110005	MHN110003	US	2541	SPN110009	8	VCP		215	252			0	0.00			0	0.00							
3	6_No_Defect	946		GGSD		35	1137		BELGRAVE ALLEY	4/21/2005	8903	8902	MHE090009	MHE090008	U/S	1395	SPE090032	8	VCP		192	189		0	0	0.00		0	0	0.00							
5	6_No_Defect	946		PPT		MAP 3-B3-5	28		PEARCE AVE	8/29/2012	13234	12782	MHR140021	MHR140022	D/S	6522	SPR140011	8	VCP		150	155.2	0000	0	0	0.00	0000	0	0	0.00							
1	6_No_Defect	947			5		17		12551 Kengsington Ln.	2/10/2004	11257	11258	MHN110005	MHN110006	DS	2543	SPN110011	8	VCP		20	22			0	0.00			0	0.00							
3	6_No_Defect	947		PPT		50	24		VALLEY VIEW ST	12/20/2007	7786	7787	MHE090020	MHE090021	D/S	1619	SPE090008	8	VCP		310	130		0	0	0.00		0	0	0.00							
5	6_No_Defect	947		PPT		MAP 4-B2-2	14		NEWLAND STREET	9/13/2012	7610	7622	MHK160025	MHK160040	D/S	669	SPK160039	8	VCP		156	155.7	0000	0	0	0.00	0000	0	0	0.00							
1	6_No_Defect	948			7		22		12552 Shelley Dr.	2/16/2004	11263	11260	MHN110011	MHN110008	US	2545	SPN110013	8	VCP		245	255			0	0.00			0	0.00							
3	6_No_Defect	948		PPT		50	30		VALLEY VIEW EASEMENT	12/21/2007	7787	8911	MHE090021	MHE090022	D/S	1740	SPE090034	10	VCP		365	338		0	0	0.00		0	0	0.00							
5	6_No_Defect	948		PPT		MAP 3-B3-4	20		JANET STREET	8/29/2012	11690	11689	MHR100016	MHR100015	U/S	6170	SPR100043	8	VCP		160	156.1	0000	0	0	0.00	0000	0	0	0.00							
1	6_No_Defect	949			8		1	x	12571 Flower St.	2/16/2004	11264	11263	MHN110012	MHN110011	US	2548	SPN110016	8	VCP	3	190	182			0	0.00			0	0.00							
3	6_No_Defect	949		PPT		50	37		BELGRAVE AVE	12/21/2007	7857	7880	MHE090030	MHE090041	D/S	1796	SPE090041	12	VCP		260	265		0	0	0.00		0	0	0.00							
5	6_No_Defect	949		PPT		MAP 3-B3-1	8		9TH STREET	8/6/2012	12538	12536	MHQ110050	MHQ110048	D/S	6583	SPQ110029	10	VCP		155	158.1	0000	0	0	0.00	0000	0	0	0.00							
1	6_No_Defect	950			44		22		12666 Brookhurst St.	4/27/2004	10696	10695	MHN110032	MHN110031	US	2630	SPN110038	8	VCP		120	122			0	0.00			0	0.00							
3	6_No_Defect	950		GGSD		34	1114	Y	TUNSTALL	4/7/2005	7871	7881	MHE090037	MHE090042	D/S	1527	SPE090047	8	VCP		328	204		0	0	0.00		0	0	0.00			1			MSA = High water. Bad lighting. Camera jumps 126' to 192'. Unable to see any defects.	Redo inspection
5	6_No_Defect	950		PPT		June Map 2 B1	42		MAUREEN DRIVE	6/11/2012	9729	9649	MHM050028	COM050005	U/S	5056	SPM050013	8	VCP		155	158.4	0000				0000									U/S MH is CO	
1	6_No_Defect	951			44		24		12666 Brookhurst St.	4/27/2004	10696	10697	MHN110032	MHM110048	DS	2631	SPN110039	8	VCP		250	247			0	0.00			0	0.00							
3	6_No_Defect	951		PPT		50	38		BELGRAVE AVE	12/21/2007	7880	7881	MHE090041	MHE090042	D/S	1797	SPE090052	12	VCP		258	260		0	0	0.00		0	0	0.00							
5	6_No_Defect	951		PPT		MAP 4-B1-5	22		CORK ST	9/19/2012	10570	10571	MHM170021	MHM170022	D/S	2218	SPM170017	8	VCP		170	162.2	0000	0	0	0.00	0000	0	0	0.00				1			
1	6_No_Defect	952			9		22		12802 Nutwood St.	2/20/2004	11121	11120	MHN120002	MHN120001	US	2804	SPN120001	8	VCP		334	333			0	0.00			0	0.00							
3	6_No_Defect	952		PPT		50	39		BELGRAVE AVE	12/21/2007	7881	8653	MHE090042	MHE090043	D/S	1960	SPE090054	12	VCP		258	259		0	0	0.00		0	0	0.00							
5	6_No_Defect	952		PPT		MAP 2-1-4	7		BOWEN STREET	7/17/2012	11387	11283	MHN130018	MHN130016	U/S	2777	SPN130916	6	VCP		163	163.1	0000	0	0	0.00	0000	0	0	0.00							
1	6_No_Defect	953			9		23		12802 Nutwood St.	2/20/2004	11121	11122	MHN120002	MHN120003	DS	2805	SPN120002	8	VCP		126	127			0	0.00			0	0.00							
3	6_No_Defect	953		PPT		50	40		BELGRAVE AVE	12/21/2007	8653	8918	MHE090043	MHE090044	D/S	2098	SPE090024	12	VCP		200	166		0	0	0.00		0	0	0.00							
1	6_No_Defect	954			22		22		10401 Nutwood St.	3/15/2004	11127	13361	MHN120006	MHN120006-A	DS	6783	SPN120009	10	VCP		300	77			0	0.00			0	0.00							
3	6_No_Defect	954		PPT		50	29		VALLEY VIEW EASEMENT	12/21/2007	8860	8858	MHE090045	MHF090042	U/S	1500	SPF090049	8	VCP		268	36		0	0	0.00		0	0	0.00	1		1			MSA = Siphon	
5	6_No_Defect	954		PPT		MAP 3-B3-4	21		TWINTREE AVENUE	8/29/2012	11690	12855	MHR100016	COR100002	U/S	6469	SPR100049	8	VCP		165	165.7	0000	0	0	0.00	0000	0	0	0.00							
1	6_No_Defect	955			8		17		Flower St.	2/17/2004	11248	11251	MHN120014	MHN120017	DS	2536	SPN120015	8	VCP		155	151			0	0.00			0	0.00							
3	6_No_Defect	955		GGSD		38	1358		TRINETTE	6/7/2005	7803	8876	MHE100009	MHE100007	U/S	1955	SPE100054	8	VCP		330	326		0	0	0.00		0	0	0.00							
5	6_No_Defect	955		PPT		MAP 2-1-2	9		HALEKULANI DR	7/10/2012	14564	14565			U/S	8327	new	8	VCP		165	165.9	0000	0	0	0.00	0000	0	0	0.00							
1	6_No_Defect	956			9		11		10352 Stanford Ave.	2/19/2004	0	0	MHN120015	MHN120016	DS	2537	SPN120016	8	VCP		223	221			0	0.00			0	0.00							
3	6_No_Defect	956		GGSD		38	1357		TUNSTALL	6/7/2005	7803	7802	MHE100009	MHE100008	U/S	1424	SPE100043	8	VCP		192	190		0	0	0.00		0	0	0.00							
5	6_No_Defect	956		PPT		MAP 3-B5	5		SHERMAN AVENUE	9/19/2012	12318	11883	MHP130025	MHP130022	U/S	4288	SPP130015	8	VCP		150	168.2	0000	0	0	0.00	0000	0	0	0.00							
1	6_No_Defect	957			9		12		10280 Stanford Ave.	2/19/2004	0	0	MHN120016	MHN120017	DS	2538	SPN120017	8	VCP		58	57			0	0.00			0	0.00							
3	6_No_Defect	957		GGSD		38	1359		TRINETTE	6/7/2005	7804	7805	MHE100010	MHE100011	D/S	1426	SPE100045	8	VCP		275	318		0	0	0.00		0	0	0.00							
5	6_No_Defect	957		PPT		MAP 4-B1-3	15		KEDGE AVE	9/11/2012	6883	6879	MHO230030	MHO230012	D/S	169	SPO230028	8	VCP		170	168.4	0000	0	0	0.00	0000	0	0	0.00							
1	6_No_Defect	958			9		13		10281 Stanford Ave.	2/19/2004	11251	11252	MHN120017	MHN120026	DS	2539	SPN120018	8	VCP		75	79			0	0.00			0	0.00							
3	6_No_Defect	958		GGSD		38	1360		BLACKMER	6/7/2005	7805	7831	MHE100011	MHE100022	U/S	1427	SPE100046	8	VCP		93	94		0	0	0.00		0	0	0.00							
5	6_No_Defect	958		PPT		MAP 4-B2-2	41		BOYD AVENUE	9/10/2012	11061	11053	MHL150043	MHL150035	D/S	2483	SPL150032	8	VCP		170	169.2	0000	0	0	0.00	0000	0	0	0.00							
1	6_No_Defect	959			9		15		10402 Park Ave.	2/19/2004	11242	11122	MHN120009	MHN120003	DS	2917	SPN120019	8	VCP		360	358			0	0.00			0	0.00							

Appendix D-3

| Phase | Priority | Ranking | Repair Completion Date | 2018_Project | Contractor | Tape No. | DVD No. | Inspection No. | Reversal Tape No. | Reversal DVD No. | Reversal Inspec. No. | DVD Watched? (Y) | Location | Street Name | CCTV Date | Existing MH ID Start | Existing MH ID End | Previous MH ID Start | Previous MH ID End | Direction of Camera | Pipe Existing Sewer ID | Pipe Previous Sewer ID | Pipe Size (in) | Pipe Material | Pipe Joint Length (ft) | Pipe GIS Comment | Length (ft) | CCTV Length (ft) | Structural Defect Coding: Crack C | Fracture F | Broken B | Hole H | Joint J | Deformed D | Collapsed Pipe X | Surface Damage S | Lining Failure LF | Point Repair RP | Sags WL | PACP Quick Struct Rating | Total Structural Defects | Total Structural Defect Score | Structural Defect Index | Operational and Maintenance: Deposits AGS | Roots (R) AE B | Roots (R) AE % | Roots (R) Other L | Roots (R) Other % | Roots (R) Other Z | Fine (F) B | Fine (F) L | Tap (T) J | Tap (T) C | Medium (M) B | Medium (M) L | Medium (M) J | Ball (B) C | Ball (B) B | Ball (B) L | Ball (B) J | Infiltration I C | Obstacles OB G | Obstacles OB D | Obstacles OB R | Vermin V W | PACP Quick Maint Rating | Total O&M Defects | Total O&M Defect Score | O&M Defect Index | Construction Features: Tap (Lateral) T FD | Tap (Lateral) T FL | Tap (Lateral) T BI | Tap (Lateral) T BD | Line L D | Line L L | Line L U | Line L R | Intruding Seal Material IS LD | Intruding Seal Material IS RD | Intruding Seal Material IS SRH | Intruding Seal Material IS SRB | Intruding Seal Material IS SRL | Intruding Seal Material IS Z | Miscellaneous M SA | Miscellaneous M CU | Miscellaneous M MC | Total Construction Feature | Reasons for Survey Aband | GIS Identified Abandoned | Repair Description | Comments | Recommendations |
|---|---|---

Appendix D-3

| Phase | Priority | Ranking | Repair Completion Date | 2018_Project | General | | | | | | | | | | | | Existing MH ID | | Previous MH ID | | Direction of Camera | Pipe | | | | | | | Structural Defect Coding | | | | | | | | | | | |

Appendix D-3

| Phase | Priority | Ranking | Repair Completion Date | 2018_Project | Contractor | Tape No. | DVD No. | Inspection No. | Reversal Tape No. | Reversal DVD No. | Reversal Inspec. No. | DVD Watched? (Y) | Location | Street Name | CCTV Date | Existing MH ID Start | Existing MH ID End | Previous MH ID Start | Previous MH ID End | Direction of Camera | Pipe Existing Sewer ID | Pipe Previous Sewer ID. | Pipe Size (in) | Pipe Material | Pipe Joint Length (ft) | Pipe GIS Comment | Length (ft) | CCTV Length (ft) | Structural Defect Coding: Crack C | Fracture F | Broken B | Hole H | Joint J | Deformed D | Collapsed Pipe X | Surface Damage S | Lining Failure | Point Repair | Sags WL | PACP Quick Struct Rating | Total Structural Defects | Total Structural Defect Score | Structural Defect Index | Operational and Maintenance: Deposits D | Roots (R) | Infiltration I | Obstacles OB | Vermin V | PACP Quick Maint Rating | Total O&M Defects | Total O&M Defect Score | O&M Defect Index | Construction Features: Tap (Lateral) T | Line L | Intruding Seal Material IS | Miscellaneous M | Total Construction Feature | Reasons for Survey Aband | GIS Identified Abandoned | Repair Description | Comments | Recommendations |
|---|---|---

Appendix D-3

Phase	Priority	Ranking	Repair Completion Date	2018_Project	Contractor	Tape No.	DVD No.	Inspection No.	Reversal Tape No.	Reversal DVD No.	Reversal Inspec. No.	DVD Watched? (Y)	Location	Street Name	CCTV Date	Existing MH ID Start	Existing MH ID End	Previous MH ID Start	Previous MH ID End	Direction of Camera	Pipe Existing Sewer ID	Pipe Previous Sewer ID	Pipe Size (in)	Pipe Material	Pipe Joint Length (ft)	Pipe GIS Comment	Length (ft)	CCTV Length (ft)	Structural Defect Coding	PACP Quick Struct Rating	Total Structural Defects	Total Structural Defect Score	Structural Defect Index	Operational and Maintenance	PACP Quick Maint Rating	Total O&M Defects	Total O&M Defect Score	O&M Defect Index	Construction Features	Miscellaneous	Total Construction Features	Reasons for Survey Aband	GIS Identified Abandoned	Repair Description	Comments	Recommendations
1	6_No_Defect	1035					11		10					11150 Sherman Ave.	2/23/2004	11876	11875	MHP130015	MHP130014	US	3905	SPP130007	6	VCP			120	119				0	0.00														
3	6_No_Defect	1035			PPT		50	9						LAMPSON	12/19/2007	7390	7391	MHF110002	MHF110003	D/S	1204	SPF110002	8	VCP			352	352			0	0	0.00		0	0	0.00									
5	6_No_Defect	1035			PPT		MAP 2-1-3	10						FLOWER STREET	7/16/2012	11317	11318	MHN140035	MHN140037	D/S	2914	SPN140022	8	VCP			300	302.6		0000	0	0	0.00		0000	0	0	0.00								
1	6_No_Defect	1036					11		14					11092 Sherman Ave.	2/23/2004	11878	11882	MHP130017	MHP130021	DS	3908	SPP130010	6	VCP			105	112				0	0.00														
3	6_No_Defect	1036			PPT		50	10						LAMPSON	12/19/2007	7397	7398	MHF110004	MHF110005	D/S	1211	SPF110004	8	VCP			272	265			0	0	0.00		0	0	0.00									
5	6_No_Defect	1036			PPT		MAP 3-B2-4	14						KEARNEY WAY	8/24/2012	12953	12952	MHP080026	MHP080025	U/S	6203	SPP080019	8	VCP			300	302.8		0000	0	0	0.00		0000	0	0	0.00								
1	6_No_Defect	1037					11		21					11201 Crosby Ave.	2/23/2004	11879	11880	MHP130018	MHP130019	DS	3909	SPP130011	6	VCP			225	241				0	0.00														
3	6_No_Defect	1037			PPT		43	3						TRINETTE	9/18/2007	7733	7734	MHF110010	MHG110013	D/S	1136	SPG110038	8	VCP			338	340			0	0	0.00		0	0	0.00									
5	6_No_Defect	1037			PPT		MAP 2-1-3	9						FLOWER STREET	7/16/2012	11316	11317	MHN140033	MHN140035	D/S	2913	SPN140021	8	VCP			300	302.8		0000	0	0	0.00		0000	0	0	0.00								
1	6_No_Defect	1038					11		22					11151 Crosby Ave.	2/23/2004	11880	11881	MHP130019	MHP130020	DS	4285	SPP130012	6	VCP			280	280				0	0.00														
3	6_No_Defect	1038			PPT		43	1						CERULEAN	9/18/2007	7738	7739	MHF110011	MHG110015	D/S	1140	SPG110042	8	VCP			338	340			0	0	0.00		0	0	0.00									
5	6_No_Defect	1038			PPT		MAP 4-B1-6	1						HARBOR BLVD	10/3/2012	13753	12749	MHS120001	MHS110003	U/S	6592	SPS120028	10	VCP			280	303.8		0000	0	0	0.00		0000	0	0	0.00								
1	6_No_Defect	1039					11		16					11060 Sherman Ave.	2/23/2004	11882	11881	MHP130021	MHP130020	US	4286	SPP130013	6	VCP			160	163				0	0.00														
3	6_No_Defect	1039		GGSD			35	1140						TOPAZ	4/22/2005	7411	7410	MHF110016	MHF110015	U/S	1221	SPF110009	8	VCP			205	281			0	0	0.00		0	0	0.00									
5	6_No_Defect	1039			PPT		MAP 3-B2-6	17						TWINTREE AVE	8/29/2012	12713	12716	MHS100020	MHS100023	D/S	6493	SPS100011	15	VCP			305	305		0000	0	0	0.00		0000	0	0	0.00			1					
1	6_No_Defect	1040					39		24					13122 Sherman Ave.	4/16/2004	12318	12319	MHP130025	MHP130026	DS	4289	SPP130016	8	VCP			320	326				0	0.00														
3	6_No_Defect	1040		GGSD			52	1655						TRINETTE	12/12/2005	7412	8823	MHF110017	MHF110018	U/S	1656	SPF110042	8	VCP			215	257			0	0	0.00		0	0	0.00									
5	6_No_Defect	1040			PPT		MAP 2 July 2	10						GILBERT STREET	6/25/2012	9563	9564	MHL090039	MHL090040	D/S	3496	SPL090004	10	VCP			295	306.2		0000	0	0	0.00		0000	0	0	0.00								
1	6_No_Defect	1041					39		25					Sherman Ave. Easement	4/16/2004			MHP130026	MHP130027	DS		SPP130017	8	VCP			76	76				0	0.00														
3	6_No_Defect	1041		GGSD			35	1140						TOPAZ	4/22/2005	7412	7411	MHF110018	MHF110016	U/S	1222	SPF110010	8	VCP			309	306			0	0	0.00		0	0	0.00									
5	6_No_Defect	1041			PPT		MAP 3-B2-6	16						TWINTREE AVE	8/29/2012	12716	12717	MHS100023	MHS100024	D/S	6496	SPS100014	15	VCP			302	306.5		0000	0	0	0.00		0000	0	0	0.00							D/S MH ID was 12807. We checked GIS & changed it	
1	6_No_Defect	1042					21		20					13041 Garden Grove Blvd.	3/15/2004	11822	11823	MHP130046	MHP130047	DS	5293	SPP130042	8	PEP			70	64				0	0.00														
3	6_No_Defect	1042		GGSD			52	1654						TOPAZ	12/12/2005	7412	7413	MHF110018	MHF110019	D/S	1223	SPF110011	8	VCP			180	255			0	0	0.00		0	0	0.00									
5	6_No_Defect	1042			PPT		MAP 2-2-1	9						SYCAMORE AVENUE	7/6/2012	7101	7102	MHJ120017	MHJ120018	D/S	839	SPJ120027	8	Clay Tile			307	307		0000	0	0	0.00		0000	0	0	0.00								
1	6_No_Defect	1043		X			11		20					11002 Sherman Ave.	2/23/2004	11825	11824	MHP130024	MHP130023	US	5295	SPP130044	6	VCP			115	118				0	0.00										cappe d-off			
3	6_No_Defect	1043			PPT		43	34						POPLAR	9/25/2007	8719	8720	MHF110031	MHF120021	D/S	1275	SPF120017	8	VCP			213	262			0	0	0.00		0	0	0.00									
5	6_No_Defect	1043		X	PPT		MAP 2-2-1	16	MAP 2-2-1	27				JOSEPHINE STREET	7/2/2012	8400	8402	MHK120017	MHK130004	D/S	3374	SPK120018	10	Clay Tile			317	312		0000	0	0	0.00		0000	0	0	0.00			2	2			24" MSA (MMC). Inspection Completed	
1	6_No_Defect	1044					11		9					11231 Paloma Ave.	2/23/2004	11872	11874	MHP140001	MHP140003	DS	3902	SPP140001	6	VCP			330	335				0	0.00														
3	6_No_Defect	1044			GGSD		52	1658						KILLARNEY	12/14/2005	8824	8825	MHF110032	MHF110033	D/S	1624	SPF110028	8	VCP			169	166			0	0	0.00		0	0	0.00									
5	6_No_Defect	1044			PPT		MAP 2-1-1	12						MARIETTA AVE	7/9/2012	8467	8466	MHL120011	MHL120010	U/S	3126	SPL120011	8	VCP			306	313		0000	0	0	0.00		0000	0	0	0.00								
3	6_No_Defect	1045			GGSD		52	1659						GARNET	12/14/2005	8823	8828	MHF110036	MHF110017	U/S	1642	SPF110041	8	VCP			256	255			0	0	0.00		0	0	0.00									
5	6_No_Defect	1045			PPT		MAP 3-B2-4	5						HASTER STREET	8/24/2012	12656	12644	MHT100038	MHT100040	D/S	3917	SPT100033	10	VCP			316	315.6		0000	0	0	0.00		0000	0	0	0.00								
3	6_No_Defect	1046			GGSD		52	1662						LENORE	12/14/2005	8829	8828	MHF110037	MHF110036	U/S	1627	SPF110031	8	VCP			119	119			0	0	0.00		0	0	0.00									
5	6_No_Defect	1046			PPT		MAP 4-B2-2	35						HAZEL STREET	9/12/2012	11054	11056	MHL150036	MHL150038	D/S	2477	SPL150025	8	VCP			320	317.4		0000	0	0	0.00		0000	0	0	0.00								
3	6_No_Defect	1047			GGSD		52	1662						LENORE	12/14/2005	8830	8829	MHF110038	MHF110037	U/S	1628	SPF110032	8	VCP			300	297			0	0	0.00		0	0	0.00									
5	6_No_Defect	1047			PPT		MAP 4-B1-1	18						BUENA STREET	9/4/2012	7486	7487	MHS170010	MHS170011	DS	466	SPS170012	8	VCP			315	318.2		0000	0	0	0.00		0000	0	0	0.00								
3	6_No_Defect	1048			GGSD		52	1663						LENORE	12/14/2005	7790	8831	MHF110039	MHE110039	U/S	1630	SPE110001	8	VCP			350	349			0	0	0.00		0	0	0.00									
5	6_No_Defect	1048			PPT		MAP 4-B2-2	15						MAGNOLIA STREET/EASEMENT	9/13/2012	13318	13317			U/S	6692	SPL160026	8	VCP			448	319.2		0000	0	0	0.00		0000	0	0	0.00								
3	6_No_Defect	1049			GGSD		52	1655						TRINETTE	12/12/2005	8832	8823	MHF110040	MHF110017	U/S	1641	SPF110040	8	VCP			350	347			0	0	0.00		0	0	0.00									
5	6_No_Defect	1049			PPT		MAP 4-B2-2	36						HAZEL STREET	9/12/2012	11053	11054	MHL150035	MHL150036	D/S	2476	SPL150024	8	VCP			320	319.4		0000	0	0	0.00		0000	0	0	0.00								
3	6_No_Defect	1050			GGSD		52	1657						TRINETTE	12/13/2005	8833	8832	MHF110041	MHF110040	U/S	1631	SPF110034	8	VCP			350	349			0	0	0.00		0	0	0.00									
5	6_No_Defect	1050			PPT		MAP 2-2-1	4						MONROE STREET	7/6/2012	7723	7724	MHJ130014	MHJ140001	D/S	787	SPJ130009	8	Clay Tile			330	319.9		0000	0	0	0.00		0000	0	0	0.00								
3	6_No_Defect	1051			PPT		44	9						SPRINGDALE	9/25/2007	7406	7407	MHF120001	MHF120002	D/S	1218	SPF120001	8	VCP			260	47			0	0	0.00		0	0	0.00				1				MSA = Siphon	
5	6_No_Defect	1051			PPT		MAP 4-B2-1	25						LAUREL ST	9/4/2012	14168	14169			D/S	7854	new	8	VCP			309	321.5		0000	0	0	0.00		0000	0	0	0.00								
3	6_No_Defect	1052			GGSD		52	1669						OWEN	1/11/2006	8815	8839	MHF120003	MHF110045	U/S	1640	SPF120035	8	VCP			219	216			0	0	0.00		0	0	0.00									
5	6_No_Defect	1052			PPT		June Map 2 B1	22						HARCOURT AVE	6/7/2012	8988	8994	MHL030008	MHL030019	U/S	4532	SPL030020	8	VCP			320	323.6		0000	0	0	0.00		0000	0	0	0.00								
3	6_No_Defect	1053			GGSD		P4 A-1	5						ANTHONY	11/10/2007	8818	8819	MHF120005	MHF120006	D/S	1743	SPF120032	8	VCP			299	297			0	0	0.00		0	0	0.00									
5	6_No_Defect	1053			PPT		MAP 4-B1-2	15						SEABOARD CIRCLE	9/7/2012	10882	10883	MHR160028	MHR160029	D/S	4348	SPR160020	8	VCP			325	324.2		0000	0	0	0.00		0000	0	0	0.00								
3	6_No_Defect	1054			GGSD		52	1671						ANTHONY	1/11/2006	8820	8819	MHF120007	MHF120006	U/S	1744	SPF120033	8	VCP			350	349			0	0	0.00		0	0	0.00									
5	6_No_Defect	1054			PPT		MAP 3-5	20	MAP 3-6	10				9TH STREET	7/31/2012	12530	12481	MHP110027	MHP110001	D/S	6054	SPP110005	8	Clay Tile			320	326.8		0000	0	0	0.00		0000	0	0	0.00			2				191.5' MSA (OBJECT IN JOINT); Inspection Completed	
3	6_No_Defect	1055			GGSD		52	1667						TOPAZ	1/9/2006	8655	8654	MHF120010	MHF110020	U/S	1225	SPF120003	8	VCP			350	349			0	0	0.00		0	0	0.00									
5	6_No_Defect	1055			PPT		MAP 4-B1-1	9						KEEL AVE	9/5/2012	7491	7510	MHS170019	MHS170021	D/S	567	SPS170025	8	VCP			330	326.9		0000	0	0	0.00		0000	0	0	0.00								
3	6_No_Defect	1056			GGSD		52	1667						TOPAZ	1/9/2006	8656	8655	MHF120011	MHF120010	U/S	1226	SPF120004	8	VCP			350	349			0	0	0.00		0	0	0.00									
5	6_No_Defect	1056			PPT		MAP 4-B2-2	38						NEWLAND STREET	9/12/2012	7621	7610	MHK150037	MHK160025	D/S	668	SPK150041	8	VCP			329	327.6		0000	0	0	0.00		0000	0	0	0.00								
3	6_No_Defect	1057			GGSD		P4 A-2	8						SYLVAN ST	10/28/2007	7428	8723	MHF120020	MHF120024	D/S	1700	SPF120016	10	VCP			264	264			0	0	0.00		0	0	0.00									
5	6_No_Defect	1057			PPT		MAP 4-B1-1	6						CLINTON STREET	9/6/2012	7511	7450	MHS170025	MHS170026	D/S	427	SPS170002	8	VCP			330	328		0000	0	0	0.00		0000	0	0	0.00								
3	6_No_Defect	1058			PPT		43	35						POPLAR	9/25/2007	8720	8721	MHF120021	MHF120022	D/S	1276	SPF120018	8	VCP			350	351			0	0	0.00		0	0	0.00									
5	6_No_Defect	1058			PPT		MAP 4-B2-2	40						NEWLAND STREET	9/12/2012	7603	7620	MHK150026	MHK150036	D/S	666	SPK150039	8	VCP			329	328.5		0000	0	0	0.00		0000	0	0	0.00								
3	6_No_Defect	1059			GGSD		52	1669						OWEN	1/11/2006	8816	8815	MHF120031	MHF120003	U/S	1620	SPF120029	8	VCP			220	219			0	0	0.00		0	0	0.00									
5	6_No_Defect	1059			PPT		MAP 3-B5	39						WEST STREET	9/4/2012	11677	12901	MHR110030	MHR120001	D/S	5739	SPR120032	10	VCP			138	330.3		0000	0	0	0.00		0000	0	0	0.00								
3	6_No_Defect	1060			PPT		49	36				Y		EASEMENT	11/9/2007	8209	8206	MHG060002	MHG060003	D/S	1780	SPG060002	10	VCP			30	4			0	0	0.00		0	0	0.00				1				MSA = gas flap	
5	6_No_Defect	1060			PPT		MAP 4-B1-1	2						SUNSWEPT AVE	9/6/2012	7494	7511	MHS170024	MHS170025	D/S	568	SPS170026	8	VCP			330	331.2		0000	0	0	0.00		0000	0	0	0.00								
3	6_No_Defect	1061			PPT		49	24						EASEMENT	11/6/2007	8193	8192	MHG070001	MHH070004	U/S	1777	SPH070019	12	VCP			325	324			0	0	0.00		0	0	0.00									
5	6_No_Defect	1061			PPT		MAP 4-B1-1	7						CLINTON STREET	9/6/2012	7510	7511	MHS170021	MHS170025	D/S	484	SPS170022	8	VCP			330	331.7		0000	0	0	0.00		0000	0	0	0.00								
3	6_No_Defect	1062			GGSD		45	1532						SANTA RITA	10/12/2005	8217	8218	MHG080009	MHG080010	D/S	965	SPG080005	8	VCP			163	163			0	0	0.00		0	0	0.00									
5	6_No_Defect	1062			PPT		MAP 4-B1-1	3						SUNSWEPT AVE	9/6/2012	7493	7494	MHS170023	MHS170024	D/S	471	SPS170017	8	VCP			330	332.4		0000	0	0	0.00		0000	0	0	0.00								
3	6_No_Defect	1063			GGSD		45	1533						SANTA RITA	10/13/2005	8219	8220	MHG080011	MHG080012	D/S	967	SPG080007	8	VCP			158	157			0	0	0.00		0	0	0.00									
5	6_No_Defect	1063			PPT		MAP 3-B2-5	6						FIREBRAND STREET	8/28/2012	12708	12709	MHS100015	MHS100016	D/S	6488	SPS100006	8	VCP			333	332.5		0000	0	0	0.00		0000	0	0	0.00			2					
3	6_No_Defect	1064			GGSD		45	1533						SANTA RITA	10/13/2005	8220	8224	MHG080012	MHG080016	D/S	968	SPG080008	8	VCP			330	328			0	0	0.00		0	0	0.00									
5	6_No_Defect	1064			PPT		MAP 3-B3-2	2						TAFT STREET	8/21/2012	12301	12302	MHO140025	MHO140026	D/S	3948	SPO140012	8	VCP			335	332.6		0000	0	0	0.00		0000	0	0	0.00							258.9' Unmarked MH	
3	6_No_Defect	1065			GGSD		45	1527						SCANDIA	10/11/2005	8221	8222	MHG080013	MHG080014	D/S	969	SPG080009	8	VCP			332	329			0	0	0.00		0	0	0.00									

Appendix D-3

Phase	Priority	Ranking	Repair Completion Date	2018_Project	Contractor	Tape No.	DVD No.	Inspection No.	Reversal Tape No.	Reversal DVD No.	Reversal Inspec. No.	DVD Watched? (Y)	Location	Street Name	CCTV Date	Existing MH ID	Previous MH ID	Direction of Camera	Pipe	Existing Sewer ID	Previous Sewer ID	Size (in)	Material	Joint Length (ft)	GIS Comment	Length (ft)	CCTV Length (ft)	Structural Defect Coding	PACP Quick Struct Rating	Total Structural Defects	Total Structural Defect Score	Structural Defect Index	Operational and Maintenance	PACP Quick Maint Rating	Total O&M Defects	Total O&M Defect Score	O&M Defect Index	Construction Features	Miscellaneous	Total Construction Features	Reasons for Survey Aband	GIS Identified Abandoned	Repair Description	Comments	Recommendations
																General																												
																Existing MH ID	Previous MH ID																												
																Start	End	Start	End																										
5	6_No_Defect	1065			PPT		MAP 4-B1-2	20					BROOKHURST STREET		9/7/2012	6890	6891	MHN180039	MHN180040	D/S	323	SPN180028	10	VCP			327	334.2		0000	0	0	0.00												
3	6_No_Defect	1066			GGSD		45	1527					SCANDIA		10/11/2005	8222	8223	MHG080014	MHG080015	D/S	970	SPG080010	8	VCP			332	330			0	0	0.00												
5	6_No_Defect	1066			PPT		MAP 2-1-3	1					CASA LINDA LANE		7/11/2012	12092	12093	MHL130020	MHL130021	D/S	2686	SPL130011	8	VCP			333	335.1		0000	0	0	0.00												
3	6_No_Defect	1067			GGSD		45	1528					SCANDIA		10/12/2005	8224	8223	MHG080016	MHG080015	U/S	971	SPG080011	8	VCP			332	331			0	0	0.00												
5	6_No_Defect	1067			PPT		MAP 4-B1-1	10					KEEL AVE		9/5/2012	7490	7491	MHS170018	MHS170019	D/S	469	SPS170015	8	VCP			330	335.8		0000	0	0	0.00												
3	6_No_Defect	1068			GGSD		MIXE D 1	1509					SANTA CATALINA		10/4/2005	8226	8225	MHG080018	MHG080017	U/S	973	SPG080013	8	VCP			195	194			0	0	0.00												
5	6_No_Defect	1068			PPT		MAP 3-B2-4	10					ADRIAN STREET		8/24/2012	12668	12669	MHT090003	MHT090004	D/S	3929	SPT090021	8	VCP			335	336.2		0000	0	0	0.00												
3	6_No_Defect	1069			GGSD		44	1523					SANTA RITA		10/5/2005	8229	8224	MHG080021	MHG080016	U/S	972	SPG080012	8	VCP			260	259			0	0	0.00												
5	6_No_Defect	1069			PPT		MAP 4-B2-2	34					MAYS AVENUE		9/12/2012	6981	6978	MHL150044	MHL150037	U/S	265	SPL150033	8	VCP			365	338.3		0000	0	0	0.00												
3	6_No_Defect	1070			GGSD		44	1523					SANTA RITA		10/5/2005	8302	8229	MHG080024	MHG080021	U/S	1310	SPG080040	8	VCP			254	253			0	0	0.00												
5	6_No_Defect	1070			PPT		MAP 3-B4-2	2					LEDA LANE		10/3/2012	7432	6665	MHR140017	MHR140016	U/S	418	SPR140018	8	VCP			326	339		0000	0	0	0.00												
3	6_No_Defect	1071			GGSD		45	1526					CANTER		10/11/2005	8304	8305	MHG080026	MHG080027	D/S	1099	SPG080024	8	VCP			192	188			0	0	0.00												
5	6_No_Defect	1071			PPT		MAP 2-2-1	7					SYCAMORE AVENUE		7/6/2012	7099	14651			D/S	8436		12	Clay Tile	PRIVATE		332	339.4		0000	0	0	0.00												
3	6_No_Defect	1072			GGSD		44	1518					SANTA BARBARA		10/5/2005	8307	8306	MHG080029	MHG080028	U/S	1101	SPG080026	8	VCP			253	250			0	0	0.00												
5	6_No_Defect	1072			PPT		MAP 3-B4-1	7					GARDEN GROVE BLVD		9/5/2012	12786	12787	MHT120029	MHT120030	D/S	6597	SPT120034	10	VCP			344	340		0000	0	0	0.00												
3	6_No_Defect	1073			GGSD		44	1519					SANTA BARBARA		10/5/2005	8308	8307	MHG080030	MHG080029	U/S	1102	SPG080027	8	VCP			253	261			0	0	0.00												
5	6_No_Defect	1073			PPT		MAP 4-B1-1	4					SUNSWEPT AVE		9/6/2012	7492	7493	MHS170022	MHS170023	D/S	470	SPS170016	8	VCP			340	340.2		0000	0	0	0.00												
3	6_No_Defect	1074			GGSD		44	1520					CARLOTTA		10/6/2005	8308	8309	MHG080030	MHG080031	D/S	1103	SPG080028	8	VCP			308	304			0	0	0.00												
5	6_No_Defect	1074			PPT		MAP 2-1-2	12					BROOKHURST WAY		7/11/2012	11329	11330	MHM120001	MHM120002	D/S	2814	SPM120001	10	VCP			336	340.4		0000	0	0	0.00												
3	6_No_Defect	1075			GGSD		44	1520					CARLOTTA		10/6/2005	8309	8310	MHG080031	MHG080032	D/S	1104	SPG080029	8	VCP			308	304			0	0	0.00												
5	6_No_Defect	1075			PPT		Map 1 May	56					MANLEY STREET		5/25/2012	7927	7936	MHD110003	MHD110013	D/S	1755	SPD110005	10	VCP			339	340.9		0000	0	0	0.00											U/S MH was 8633, D/S MH was 8637, Pipe ID was 1975, Pipe size was 10". We checked & changed it	
3	6_No_Defect	1076			GGSD		MIXE D 1	1509					SANTA CATALINA		10/4/2005	8312	8226	MHG080034	MHG080018	U/S	2433	SPG080042	8	VCP			357	281			0	0	0.00												
3	6_No_Defect	1077			GGSD		43	1510					SANTA CATALINA		10/4/2005	8313	8315	MHG080035	MHG080036	D/S	1108	SPG080033	8	VCP			366	362			0	0	0.00												
5	6_No_Defect	1077			PPT		MAP 4-B1-2	16					WEST STREET		9/7/2012	10932	10933	MHQ160002	MHQ160003	D/S	4854	SPQ160017	8	VCP			345	344		0000	0	0	0.00												
3	6_No_Defect	1078			GGSD		43	1510					SANTA CATALINA		10/4/2005	8314	8315	MHG080036	MHF080009	D/S	1109	SPG080034	8	VCP			217	216			0	0	0.00												
5	6_No_Defect	1078			PPT		MAP 2-1-5	20					TRASK AVE		7/27/2012	10479	10519	MHN150012	MHN150011	U/S	2463	SPN150036	8	VCP			360	344.5		0000	0	0	0.00											U/S MH is CO	
3	6_No_Defect	1079			GGSD		44	1512					SANTA MONICA		10/4/2005	8319	8318	MHG080038	MHF080011	U/S	1113	SPG080037	8	VCP			271	215			0	0	0.00												
5	6_No_Defect	1079			PPT		MAP 4-B2-1	4					YOCKEY STREET		9/10/2012	11618	11619	MHK150015	MHK150016	D/S	2795	SPK150009	8	VCP			346	345.6		0000	0	0	0.00												
3	6_No_Defect	1080			GGSD		44	1511					WUTZKE		10/4/2005	8319	8317	MHG080038	MHG080037	U/S	1112	SPG080036	8	VCP			257	254			0	0	0.00												
5	6_No_Defect	1080			PPT		MAP 4-B1-2	17					WEST STREET		9/7/2012	10931	10932	MHQ160001	MHQ160002	D/S	4853	SPQ160016	8	VCP			345	347.4		0000	0	0	0.00												
3	6_No_Defect	1081			GGSD		44	1516					WUTZKE		10/5/2005	8320	8311	MHG080039	MHG080033	U/S	1106	SPG080031	8	VCP			101	97			0	0	0.00												
5	6_No_Defect	1081			PPT		MAP 4-B2-3	10					WOODBURY AVENUE		9/25/2012	10541	10390	MHM150015	COM150001	D/S	2032	SPM150010	8	VCP			200	347.8		0000	0	0	0.00												
3	6_No_Defect	1082			GGSD		48	1577					VANGUARD		11/2/2005	8269	8268	MHG090006	MHG090005	U/S	1058	SPG090010	8	VCP			366	369			0	0	0.00												
5	6_No_Defect	1082			PPT		MAP 2-1-2	2					CHAPMAN AVE		7/10/2012	13867	13866			D/S	7443	new	24	VCP			348	350.1		0000	0	0	0.00												
3	6_No_Defect	1083			GGSD		48	1578					WILD GOOSE		11/2/2005	8271	8269	MHG090008	MHG090006	U/S	1059	SPG090011	8	VCP			260	259			0	0	0.00												
5	6_No_Defect	1083			PPT		MAP 3-B4-1	6					GARDEN GROVE BLVD		9/5/2012	12787	12788	MHT120030	MHT120010	D/S	6598	SPT120035	10	VCP			346	350.6		0000	0	0	0.00												
3	6_No_Defect	1084			GGSD		50	1595					WILD GOOSE		11/8/2005	8271	8288	MHG090008	MHG090049	D/S	1331	SPG090026	8	VCP			130	121			0	0	0.00												
5	6_No_Defect	1084			PPT		MAP 3-B3-2	1					TAFT STREET		8/21/2012	12302	12303	MHO140018	MHO140019	D/S	3940	SPO140005	8	VCP			185	351.9		0000	0	0	0.00												
3	6_No_Defect	1085			GGSD		48	1579					WUTZKE		11/3/2005	7343	7341	MHG090030	MHG090029	U/S	1482	SPG090043	8	VCP			214	212			0	0	0.00												
3	6_No_Defect	1086			GGSD		39	1389					AMY		6/29/2005	8289	8282	MHG090032	MHG090031	U/S	1085	SPG090028	8	VCP			183	182			0	0	0.00												
5	6_No_Defect	1086			PPT		MAP 4-B1-2	2					ANCHOR AVE		9/10/2012	7219	7220	MHO240002	MHO240003	D/S	9	SPO240002	8	VCP			337	352.8		0000	0	0	0.00												
3	6_No_Defect	1087			GGSD		39	1389					AMY		6/29/2005	8283	8289	MHG090033	MHG090032	U/S	1086	SPG090029	8	VCP			267	346			0	0	0.00												
3	6_No_Defect	1088			GGSD		40	1411					BELGRAVE		7/15/2005	8766	8286	MHG090042	MHG090041	U/S	1329	SPG090024	8	VCP			350	349			0	0	0.00												
3	6_No_Defect	1089			GGSD		48	1579					WUTZKE		11/3/2005	7350	7343	MHG090045	MHG090030	U/S	1484	SPG090045	8	VCP			272	275			0	0	0.00												
5	6_No_Defect	1089			PPT		MAP 4-B1-5	9					WESTMINSTER BLVD		9/21/2012	10928	10929	MHQ170003	MHQ170004	D/S	5348	SPQ170016	15	VCP			122	359.3		0000	0	0	0.00												
3	6_No_Defect	1090			PPT		48	23					KNOTT		10/30/2007	8163	8187	MHG090050	MHG090055	U/S	1687	SPG090007	8	VCP			260	282			0	0	0.00												
5	6_No_Defect	1090			PPT		MAP 4-B2-1	1					ENLO STREET		9/10/2012	11596	11616	MHL150030	MHK150013	D/S	2801	SPK150013	8	VCP			349	360.5		0000	0	0	0.00												
3	6_No_Defect	1091			PPT		48	51					CHAPMAN		10/31/2007	8183	8184	MHG090051	MHG090052	D/S	948	SPG090003	8	VCP			75	77			0	0	0.00												
5	6_No_Defect	1091			PPT		MAP 3-B2-4	7					ALLARD AVE		8/24/2012	12671	12672	MHT090006	MHT090007	D/S	4025	SPT090024	8	VCP			90	365.5		0000	0	0	0.00										2		
3	6_No_Defect	1092			PPT		48	26					KNOTT		10/30/2007	8185	8184	MHG090053	MHG090052	U/S	949	SPG090004	8	VCP			217	205			0	0	0.00												
5	6_No_Defect	1092			PPT		MAP 2-1-4	1	MAP 2-1-4	2			BELFAST DR		7/16/2012	10762	10761	MHM130027	MHM130026	U/S	2334	SPM130012	8	VCP			360	366.5		0000	0	0	0.00											159.5' MSA . Inspection Completed	
3	6_No_Defect	1093			PPT		48	25					KNOTT		10/30/2007	8186	8185	MHG090054	MHG090053	U/S	950	SPG090005	8	VCP			60	67			0	0	0.00												
5	6_No_Defect	1093			PPT		MAP 4-B1-6	13					CARDINAL CIR		10/2/2012	13644	13642			D/S	7321	new	10	VCP			359	367		0000	0	0	0.00												
3	6_No_Defect	1094			PPT		48	24					KNOTT		10/30/2007	8187	8186	MHG090055	MHG090054	U/S	1686	SPG090006	8	VCP			280	282			0	0	0.00				2								
5	6_No_Defect	1094			PPT		MAP 4-B1-1	16					BUENA STREET		9/4/2012	7488	7447	MHS170012	MHS170014	D/S	426	SPS170001	8	VCP			375	367.3		0000	0	0	0.00												
3	6_No_Defect	1095			GGSD		50	1597					LAMPLIGHTER		11/8/2005	8322	8759	MHG100002	MHG100001	U/S	1116	SPG100004	8	VCP			138	135			0	0	0.00												
5	6_No_Defect	1095			PPT		Map 1 May	10					SANTA GERTRUDES AVENUE		5/16/2012	8622	8623	MHD080023	MHD080024	D/S	1606	SPD080022	8	VCP			372	370.1		0000													
3	6_No_Defect	1096			GGSD		50	1597					LAMPLIGHTER		11/8/2005	8324	8322	MHG100004	MHG100002	U/S	1117	SPG100005	8	VCP			150	148			0	0	0.00												
5	6_No_Defect	1096			PPT		MAP 3-B2-4	20					HARBOR BLVD		8/21/2012	13020	13021	MHR080021	MHS080001	D/S	6100	SPR080003	15	VCP			369	370.4		0000	0	0	0.00												
3	6_No_Defect	1097			GGSD		50	1600					HEALEY		11/8/2005	8324	8323	MHG100004	MHG100003	U/S	1118	SPG100006	8	VCP			173	169			0	0	0.00												
5	6_No_Defect	1097			PPT		Map 1 May	12					SANTA GERTRUDES AVENUE		5/16/2012	8622	8621	MHD080023	MHD080022	D/S	1605	SPD080021	8	VCP			372	370.7		0000													
3	6_No_Defect	1098			GGSD		50	1599					LAMPLIGHTER		11/8/2005	8325	8326	MHG100005	MHG100006	D/S	1120	SPG100008	8	VCP			149	148			0	0	0.00												
5	6_No_Defect	1098			PPT		MAP 2-2-1	6	MAP 2-2-1	5			SYCAMORE AVENUE		7/6/2012	14651	7103			D/S	8435		12	Clay Tile			351	380.4		0000	0	0	0.00										2	2	307' MSA (MMC). Inspection Completed	
3	6_No_Defect	1099			GGSD		50	1613					LAMPLIGHTER		11/14/2005	8327	8326	MHG100007	MHG100006	U/S	1121	SPG100009	8	VCP			306	308			0	0	0.00												
5	6_No_Defect	1099			PPT		MAP 3-B2-4	19					HARBOR BLVD		8/21/2012	13021	13022	MHS080001	MHS080002	D/S	6101	SPS080005	15	VCP			370	380.5		0000	0	0	0.00												
3	6_No_Defect	1100			GGSD		50	1616					PICKETT		11/14/2005	8329	8328	MHG100008	MHF100026	U/S	1123	SPG100011	8	VCP			243	240			0	0	0.00												
5	6_No_Defect	1100			PPT		MAP 3-B2-4	21					HARBOR BLVD		8/21/2012	13019	13020	MHR070005	MHR080021	D/S	6099	SPR080002	15	VCP			375	380.6		0000	0	0	0.00												
3	6_No_Defect	1101			GGSD		50	1613					LAMPLIGHTER		11/14/2005	8331	8327	MHG100010	MHG100007	U/S	1122	SPG100010	8	VCP			294	291			0	0	0.00												
5	6_No_Defect	1101			PPT		MAP 4-B1-1	13					MORNINGSIDE AVE		9/4/2012	7449	7450	MHS170016	MHS170026	D/S	432	SPS170007	8	VCP			385	386.1		0000	0	0	0.00												
3	6_No_Defect	1102			PPT		48	46					EASEMENT		10/31/2007	8164	8165	MHG100011	MHG100012	D/S	1683	SPG100001	10	VCP			410	413			0	0	0.00										1		
5	6_No_Defect	1102			PPT		MAP 4-B1-1	14					MORNINGSIDE AVE		9/4/2012	7448	7449	MHS170015	MHS170016	D/S	430	SPS170005	8	VCP			385	386.8		0000	0	0	0.00												
3	6_No_Defect	1103			PPT		48	47					EASEMENT		10/31/2007	8165	8166	MHG100012	MHG100013	D/S	1684	SPG100002	10	VCP			410	413			0	0	0.00				1								

Appendix D-3

Phase	Priority	Ranking	Repair Completion Date	2018_Project	Contractor	Tape No.	DVD No.	Inspection No.	Reversal Tape No.	Reversal DVD No.	Reversal Inspec. No.	DVD Watched? (Y)	Location	Street Name	CCTV Date	Existing MH ID Start	Existing MH ID End	Previous MH ID Start	Previous MH ID End	Direction of Camera	Pipe Existing Sewer ID	Pipe Previous Sewer ID	Pipe Size (in)	Pipe Material	Pipe Joint Length (ft)	GIS Comment	Length (ft)	CCTV Length (ft)	Structural Defect Coding	PACP Quick Struct Rating	Total Structural Defects	Total Structural Defect Score	Structural Defect Index	Operational and Maintenance	PACP Quick Maint Rating	Total O&M Defects	Total O&M Defect Score	O&M Defect Index	Construction Features	Miscellaneous	Total Construction Features	Reasons for Survey Aband	GIS Identified Abandoned	Repair Description	Comments	Recommendations
5	6_No_Defect	1103			PPT		MAP 3-B3-3	9					BANNER AVENUE		8/27/2012	11474	11473	MHQ140031	MHQ140030	U/S	3826	SPQ140011	8	VCP			385	387.2		0000	0	0	0.00														
3	6_No_Defect	1104			PPT		48	48					EASEMENT		10/31/2007	8166	8176	MHG100013	MHG110050	D/S	1685	SPG100003	10	VCP			360	395			0	0	0.00			0	0.00										
5	6_No_Defect	1104			PPT		MAP 4-B1-1	15					MORNINGSIDE AVE		9/4/2012	7447	7448	MHS170014	MHS170015	D/S	429	SPS170004	8	VCP			386	390		0000	0	0	0.00		0000	0	0	0.00								
3	6_No_Defect	1105			PPT		41	22					KILLARNEY		9/17/2007	7728	7727	MHG110006	MHG110044	U/S	1129	SPG110031	8	VCP			338	342			0	0	0.00			0	0.00										
5	6_No_Defect	1105			PPT		MAP 4-B1-5	7					WESTMINSTER BLVD		9/21/2012	10930	11445	MHQ170005	MHQ170006	D/S	4959	SPQ170001	15	VCP			370	394.8		0000	0	0	0.00		0000	0	0	0.00								
3	6_No_Defect	1106			PPT		42	5					SCANDIA		9/18/2007	8246	8247	MHG110007	MHG110019	D/S	1053	SPG110026	8	VCP			343	342			0	0	0.00			0	0.00										
5	6_No_Defect	1106			PPT		MAP 3-B5	33					WEST STREET		9/5/2012	12899	12898	MHR120052	MHR120053	D/S	6173	SPR120060	24	VCP			398	395		0000	0	0	0.00		0000	0	0	0.00								
3	6_No_Defect	1107			PPT		41	20					KILLARNEY		9/17/2007	8760	8246	MHG110008	MHG110007	U/S	1313	SPG110054	8	VCP			256	257			0	0	0.00			0	0.00										
5	6_No_Defect	1107			PPT		June Map 2 B1	83					DALE ST		6/15/2012	8048	8713	MHJ060004	COJ060001	D/S	1902	SPJ060004	8	Not Known			390	398.9		0000					0000											
3	6_No_Defect	1108			PPT		42	2					PALOMAR		9/18/2007	8760	8761	MHG110008	MHG110017	D/S	1470	SPG110052	8	VCP			343	342			0	0	0.00			0	0.00										
5	6_No_Defect	1108			PPT		MAP 4-B1-5	8					WESTMINSTER BLVD		9/21/2012	10929	10930	MHQ170004	MHQ170005	D/S	5349	SPQ170017	15	VCP			390	402.2		0000	0	0	0.00		0000	0	0	0.00								
3	6_No_Defect	1109			PPT		41	21					KILLARNEY		9/17/2007	7729	7728	MHG110009	MHG110006	U/S	1130	SPG110032	8	VCP			338	339			0	0	0.00			0	0.00										
5	6_No_Defect	1109			PPT		June Map 1	16					CHAPMAN AVE		6/21/2012	7167	7168	MHI090026	MHI090027	D/S	1722	SPI090005	15	VCP			400	404.9		0000					0000											
3	6_No_Defect	1110			PPT		41	19					KILLARNEY		9/17/2007	7729	8760	MHG110009	MHG110008	U/S	1131	SPG110033	8	VCP			258	262			0	0	0.00			0	0.00										
5	6_No_Defect	1110			PPT		MAP 3-B3-4	6					TRASK AVENUE		8/30/2012	12002	12003	MHR150005	MHR150004	U/S	3893	SPR150003	12	VCP			420	419.7		0000	0	0	0.00		0000	0	0	0.00								
3	6_No_Defect	1111			PPT		41	24					LAMPLIGHTER		9/17/2007	7729	7732	MHG110009	MHG110012	D/S	1132	SPG110034	8	VCP			258	258			0	0	0.00			0	0.00										
5	6_No_Defect	1111			PPT		MAP 3-B3-4	23					NADINE CIRCLE		8/29/2012	11687	11686	MHR100013	MHR100012	U/S	6167	SPR100040	8	VCP			420	422		0000	0	0	0.00		0000	0	0	0.00								
3	6_No_Defect	1112			PPT		41	34					LENORE		9/18/2007	7405	7730	MHG110010	MHF110009	D/S	1306	SPF110027	8	VCP			367	371			0	0	0.00			0	0.00										
5	6_No_Defect	1112			PPT		MAP 4-B2-1	30					RANCHERO WY		9/4/2012	14122	14123			U/S	7763	new	6	VCP			44	428.6		0000	0	0	0.00		0000	0	0	0.00								
3	6_No_Defect	1113			PPT		41	33					LENORE		9/18/2007	7731	7730	MHG110011	MHG110010	D/S	1133	SPG110035	8	VCP			362	363			0	0	0.00			0	0.00									Pipe SPG110037 corrected to SPG110035	
5	6_No_Defect	1113			PPT		MAP 3-B4-2	18					GARDEN GROVE BLVD		9/24/2012	12903	12904	MHQ120055	MHQ120056	D/S	5822	SPQ130038	24	VCP			432	435.1		0000	0	0	0.00		0000	0	0	0.00								
3	6_No_Defect	1114			PPT		41	35					LAMPLIGHTER		9/18/2007	7736	7732	MHG110012	MHG110014	U/S	1135	SPG110037	8	VCP			256	257			0	0	0.00			0	0.00										
5	6_No_Defect	1114			PPT		MAP 3-B4-2	17					GARDEN GROVE BLVD		9/24/2012	12904	12582	MHQ120056	MHG130001	D/S	5823	SPQ130039	24	VCP			434	435.2		0000	0	0	0.00		0000	0	0	0.00								
3	6_No_Defect	1115			PPT		43	4					TRINETTE		9/19/2007	7734	7735	MHG110013	MHG110042	D/S	1137	SPG110039	8	VCP			338	342			0	0	0.00			0	0.00										
5	6_No_Defect	1115			PPT		MAP 3-B5	14					NUTWOOD STREET		9/13/2012	11120	11122			D/S	7583	new	10	VCP			379	458.1		0000	0	0	0.00		0000	0	0	0.00								
3	6_No_Defect	1116			PPT		42	3					PALOMAR		9/18/2007	8761	8762	MHG110017	MHG110018	D/S	1144	SPG110046	8	VCP			343	343			0	0	0.00			0	0.00										
5	6_No_Defect	1116			PPT		MAP 4-B1-3	4					JOHANNAH AVE		9/12/2012	6902	6909	MHN180011	MHM180007	D/S	529	SPN180039	8	VCP			534	524		0000	0	0	0.00		0000	0	0	0.00							262.6 Unmapped MH	
3	6_No_Defect	1117			PPT		42	4					PALOMAR		9/18/2007	8762	8763	MHG110018	MHG110026	D/S	1145	SPG110047	8	VCP			343	343			0	0	0.00			0	0.00										
3	6_No_Defect	1118			PPT		42	6					SCANDIA		9/18/2007	8247	8248	MHG110019	MHG110020	D/S	1037	SPG110021	8	VCP			343	343			0	0	0.00			0	0.00										
3	6_No_Defect	1119			PPT		42	7					SCANDIA		9/18/2007	8248	8249	MHG110020	MHG110025	D/S	1038	SPG110022	8	VCP			343	344			0	0	0.00			0	0.00										
3	6_No_Defect	1120			PPT		42	8					SCANDIA		9/18/2007	8249	8252	MHG110021	MHG110025	D/S	1039	SPG110023	8	VCP			212	0			0	0	0.00			0	0.00										
3	6_No_Defect	1121			PPT		43	12					STANFORD		9/21/2007	8250	8134	MHG110023	MHG110022	U/S	1088	SPG110027	8	VCP			369	366			0	0	0.00			0	0.00										
3	6_No_Defect	1122			PPT		43	11					STANFORD		9/21/2007	8251	8250	MHG110024	MHG110023	U/S	1040	SPG110024	8	VCP			258	260			0	0	0.00			0	0.00			1							
3	6_No_Defect	1123			PPT		43	6					STANFORD		9/21/2007	8251	8252	MHG110024	MHG110025	D/S	1041	SPG110025	8	VCP			359	361			0	0	0.00			0	0.00										
3	6_No_Defect	1124			PPT		43	7					STANFORD		9/21/2007	8252	8763	MHG110025	MHG110026	D/S	1314	SPG110055	8	VCP			256	257			0	0	0.00			0	0.00										
3	6_No_Defect	1125			PPT		43	8					STANFORD		9/21/2007	8763	7741	MHG110026	MHG110027	D/S	1146	SPG110048	8	VCP			258	259			0	0	0.00			0	0.00										
3	6_No_Defect	1126			PPT		43	31					CANTER		9/24/2007	7744	7746	MHG110029	MHG120004	D/S	1461	SPG120017	8	VCP			258	260			0	0	0.00			0	0.00										
3	6_No_Defect	1127			PPT		47	10					DANVERS		10/9/2007	8232	8231	MHG110032	MHG110031	U/S	1969	SPG110007	8	VCP			115	55			0	0	0.00			0	0.00										
3	6_No_Defect	1128			PPT		47	11					DANVERS		10/9/2007	8234	8232	MHG110032	MHG110034	U/S	1970	SPG110008	8	VCP			220	211			0	0	0.00			0	0.00										
3	6_No_Defect	1129			PPT		47	5					ALMONDINE		10/9/2007	8234	8233	MHG110034	MHG110033	U/S	1971	SPG110009	8	VCP			115	50			0	0	0.00			0	0.00										
3	6_No_Defect	1130			PPT		47	13					DANVERS		10/9/2007	8237	8235	MHG110037	MHG110035	U/S	1974	SPG110011	8	VCP			220	225			0	0	0.00			0	0.00										
3	6_No_Defect	1131			PPT		47	12					DANVERS		10/9/2007	8237	8236	MHG110037	MHG110036	U/S	1975	SPG110012	8	VCP			25	46			0	0	0.00			0	0.00										
3	6_No_Defect	1132			PPT		47	14					CHATENAY		10/9/2007	8237	8239	MHG110037	MHG110039	D/S	1976	SPG110013	8	VCP			260	235			0	0	0.00			0	0.00									Pipe SPG110011 corrected to SPG110013	
3	6_No_Defect	1133			PPT		47	8					ALMONDINE		10/9/2007	8239	8238	MHG110039	MHG110038	U/S	1977	SPG110014	8	VCP			110	61			0	0	0.00			0	0.00										
3	6_No_Defect	1134			PPT		47	7					ALMONDINE		10/9/2007	8240	8239	MHG110040	MHG110039	U/S	1978	SPG110015	8	VCP			130	64			0	0	0.00			0	0.00										
3	6_No_Defect	1135			PPT		47	3					ALMONDINE		10/9/2007	8241	8250	MHG110041	MHG110023	D/S	1973	SPG110017	8	VCP			250	228			0	0	0.00			0	0.00										
3	6_No_Defect	1136			PPT		47	4					ALMONDINE		10/9/2007	8241	8234	MHG110041	MHG110034	U/S	1972	SPG110010	8	VCP			330	401			0	0	0.00			0	0.00										
3	6_No_Defect	1137			PPT		47	6					ALMONDINE		10/9/2007	8241	8240	MHG110041	MHG110040	U/S	1979	SPG110016	8	VCP			170	220			0	0	0.00			0	0.00										
3	6_No_Defect	1138			PPT		43	5					TRINETTE		9/19/2007	7735	7736	MHG110042	MHG110014	D/S	1138	SPG110040	8	VCP			338	339			0	0	0.00			0	0.00										
3	6_No_Defect	1139			PPT		41	23					KILLARNEY		9/17/2007	7727	7726	MHG110044	MHF110006	U/S	1128	SPG110030	8	VCP			258	258			0	0	0.00			0	0.00										
3	6_No_Defect	1140			PPT		48	53					LAMPSON		10/31/2007	8176	8175	MHG110050	MHG110049	U/S	942	SPG110005	8	VCP			40	33			0	0	0.00			0	0.00										
3	6_No_Defect	1141			PPT		48	54					LAMPSON		10/31/2007	8176	8291	MHG110050	MHG110051	D/S	1090	SPG110028	10	VCP			10	8			0	0	0.00			0	0.00										
3	6_No_Defect	1142			PPT		43	14					PARK		9/21/2007	8253	8254	MHG120001	MHG120002	D/S	1056	SPG120015	8	VCP			283	282			0	0	0.00			0	0.00										
3	6_No_Defect	1143			PPT		43	13					SUTTER		9/21/2007	8253	8255	MHG120001	MHG120005	D/S	1055	SPG120014	8	VCP			256	257			0	0	0.00			0	0.00										
3	6_No_Defect	1144			PPT		43	15					PARK		9/21/2007	8254	8764	MHG120002	MHG120028	D/S	1042	SPG120002	8	VCP			283	285			0	0	0.00			0	0.00										
3	6_No_Defect	1145			PPT		43	18					MARIETTA		9/21/2007	8255	8256	MHG120005	MHG120006	D/S	1043	SPG120003	8	VCP			289	288			0	0	0.00			0	0.00										
3	6_No_Defect	1146			PPT		43	19					MARIETTA		9/21/2007	8256	7747	MHG120006	MHG120007	D/S	1316	SPG120030	8	VCP			288	290			0	0	0.00			0	0.00										
3	6_No_Defect	1147			PPT		43	20					MARIETTA		9/21/2007	7747	7322	MHG120007	MHG120025	D/S	1464	SPG120020	8	VCP			289	292			0	0	0.00			0	0.00										
3	6_No_Defect	1148			PPT		43	30					WILD GOOSE		9/24/2007	8257	8250	MHG120009	MHG110023	U/S	1054	SPG120013	8	VCP			260	261			0	0	0.00			0	0.00			2							
3	6_No_Defect	1149			PPT		43	29					WILD GOOSE		9/24/2007	8258	8257	MHG120010	MHG120009	U/S	1044	SPG120004	8	VCP			239	240			0	0	0.00			0	0.00										
3	6_No_Defect	1150			PPT		43	28					WILD GOOSE		9/24/2007	8259	8258	MHG120011	MHG120010	U/S	1045	SPG120005	8	VCP			239	239			0	0	0.00			0	0.00										
3	6_No_Defect	1151			PPT		43	25					ACACIA		9/24/2007	8259	8260	MHG120011	MHG120012	D/S	1046	SPG120006	8	VCP			354	356			0	0	0.00			0	0.00										
3	6_No_Defect	1152			PPT		47	17					KNOTT		10/10/2007	8145	8144	MHG120011	MHH120010	U/S	921	SPH120011	8	VCP			436	444			0	0	0.00			0	0.00										
3	6_No_Defect	1153			PPT		43	26					ACACIA		9/24/2007	8260	8261	MHG120012	MHG120026	D/S	1047	SPG120007	8	VCP			354	359			0	0	0.00			0	0.00										
3	6_No_Defect	1154			PPT		44	1					PARK		9/25/2007	8262	8257	MHG120017	MHG120009	D/S	1057	SPG120016	8	VCP			260	262			0	0	0.00			0	0.00										
3	6_No_Defect	1155			PPT		44	2					DUMONT		9/25/2007	8262	8263	MHG120017	MHG120018	D/S	1048	SPG120008	8	VCP			347	348			0	0	0.00			0	0.00										
3	6_No_Defect	1156			PPT		44	3					DUMONT		9/25/2007	8263	8264	MHG120018	MHG120019	D/S	1049	SPG120009	8	VCP			347	348			0	0	0.00			0	0.00										
3	6_No_Defect	1157			PPT		44	5					ANTHONY		9/25/2007	8265	8264	MHG120020	MHG120019	U/S	1050	SPG120010	8	VCP			355	357			0	0	0.00			0	0.00			1							
3	6_No_Defect	1158			PPT		44	4					ANTHONY		9/25/2007	8266	8265	MHG120021	MHG120020	U/S	1051	SPG120011	8	VCP			354	358			0	0	0.00			0	0.00										
3	6_No_Defect	1159			PPT		44	6					ANTHONY		9/25/2007	8266	8267	MHG120021	MHG120022	D/S	1052	SPG120012	8	VCP			354	356			0	0	0.00			0	0.00			1							
3	6_No_Defect	1160			PPT		44	7					ANTHONY		9/25/2007	8267	7327	MHG120022	MHG120027	D/S	1317	SPG120031	8	VCP			352	354			0	0	0.00			0	0.00										
3	6_No_Defect	1161			PPT		45	11					ANTHONY		10/1/2007	7329	7406	MHG120024	MHF120001	D/S	1307	SPG120028	8	VCP			360	361			0	0	0.00			0	0.00										
3	6_No_Defect	1162			PPT		43	21					MARIETTA		9/21/2007	7322	7748	MHG120025	MHG120008	D/S	1465	SPG120021	8	VCP			289	288			0	0	0.00			0	0.00										
3	6_No_Defect	1163			PPT		43	27					ACACIA		9/24/2007	8261	7323	MHG120026	MHG120013	D/S	982	SPG120001	8	VCP			354	354			0	0	0.00			0	0.00										
3	6_No_Defect	1164			PPT		44	8					ANTHONY		9/25/2007	7327	7328	MHG120027	MHG120023	D/S	1468	SPG120026	8	VCP			355	356			0	0	0.00			0	0.00										
3	6_No_Defect	1165			PPT		43	16					PARK		9/21/2007	8764	7745	MHG120028	MHG120003	D/S	1315	SPG120029	8	VCP			300	302			0	0	0.00			0	0.00										
3	6_No_Defect	1166			PPT		45	13					MARKON		10/5/2007	8202	8200	MHH060006	MHH060004	U/S	953	SPH060007	8	VCP			114	113			0	0	0.00			0	0.00										
3	6_No_Defect	1167			PPT		43	24					PATTERSON		9/24/2007	8205	8204	MHH060009	MHH060008	U/S	957	SPH060011	8	VCP			315	318			0	0	0.00			0	0.00										
3	6_No_Defect	1168			PPT		43	23					PATTERSON		9/24/2007	8207	8208	MHH060010	MHG060001	D/S	1688	SPH060013	10	VCP			377	381			0	0	0.00			0	0.00										
3	6_No_Defect	1169			PPT		47	25					LINCOLN		10/12/2007	8127	8128	MHH060011	MHH060012	D/S	902	SPH060005	8	VCP			363	364			0	0	0.00			0	0.00										
3	6_No_Defect	1170			PPT		47	26					LINCOLN		10/12/2007	8128	7193	MHH060012	MHH060013	D/S	905	SPH060006	8	VCP			384	385			0	0	0.00			0	0.00										
3	6_No_Defect	1171			PPT		45	29					MARKON EASEMENT		10/6/2007	8189	8190	MHH070001	MHH070002	D/S	1774	SPH070016	12	VCP			207	206			0	0	0.00			0	0.00										
3	6_No_Defect	1172			PPT		49	25					EASEMENT		11/6/2007	8192	8191	MHH070004	MHH070003	U/S	1776	SPH070018	12	VCP			327	330			0	0	0.00			0	0.00										
3	6_No_Defect	1173			PPT		45	19					DOIG		10/5/2007	8114	8113	MHH070006	MHH070005	U/S	895	SPH070005	8	VCP			309	314			0	0	0.00			0	0.00										
3	6_No_Defect	1174			PPT		45	18					DOIG		10/5/2007	8115	8114	MHH070007	MHH070006	U/S	896	SPH070006	8	VCP			346	348			0	0	0.00			0	0.00										
3	6_No_Defect	1175			PPT		45	20					MONARCH		10/5/2007	8117	8116	MHH070009	MHH070008	U/S	898	SPH070008	8	VCP			225	225			0	0	0.00			0	0.00										
3	6_No_Defect	1176			PPT		45	21					MONARCH		10/5/2007	8117	8112	MHH070009	MHH080006	D/S	1674	SPH070009	10	VCP			562	562			0	0	0.00			0	0.00										
3	6_No_Defect	1177			PPT		45	31					ORANGEWOOD		10/6/2007	8119	8120	MHH070011	MHH070012	D/S	1675	SPH070011	8	VCP			56	56			0	0	0.00			0	0.00										
3	6_No_Defect	1178			PPT		45	32					ORANGEWOOD		10/6/2007	8120	8121	MHH070012	MHH070013	D/S	1676	SPH070012	8	VCP			369	371			0	0	0.00			0	0.00										
3	6_No_Defect	1179			PPT		44	21					MONARCH		9/28/2007	8123	8122	MHH070015	MHH070014	U/S	899	SPH070013	8	VCP			400	403			0	0	0.00			0	0.00										
3	6_No_Defect	1180			PPT		45	16					MARKON		10/5/2007	8197	8198	MHH070016	MHH070017	D/S	952	SPH070020	8	VCP			400	402			0	0	0.00			0	0.00										
3	6_No_Defect	1181			PPT		40	33					HUNT		9/12/2007	8109	8108	MHH080003	MHH080002	U/S	893	SPH080002	8	VCP			243	244			0	0	0.00			0	0.00										
3	6_No_Defect	1182			PPT		40	34					MONARCH		9/12/2007	8110	8107	MHH080004	MHH080001	U/S	892	SPH080001	8	VCP			410	414			0	0	0.00			0	0.00										
3	6_No_Defect	1183			PPT		40	32					HUNT		9/12/2007	8110	8109	MHH080004	MHH080003	U/S	894	SPH080003	8	VCP			350	353			0	0	0.00			0	0.00										

Appendix D-3

| Phase | Priority | Ranking | Repair Completion Date | 2018_Project | General | | | | | | | | | | | Pipe | | | | | | | Structural Defect Coding | | | | | | | | | | |

Appendix D-3

| Phase | Priority | Ranking | Repair Completion Date | 2018_Project | Contractor | Tape No. | DVD No. | Inspection No. | Reversal Tape No. | Reversal DVD No. | Reversal Inspec. No. | DVD Watched? (Y) | Location | Street Name | CCTV Date | Existing MH ID Start | Existing MH ID End | Previous MH ID Start | Previous MH ID End | Direction of Camera | Pipe Existing Sewer ID | Pipe Previous Sewer I.D. | Pipe Size (in) | Pipe Material | Pipe Joint Length (ft) | Pipe GIS Comment | Length (ft) | CCTV Length (ft) | Structural Defect Coding: Crack C L | C | M | S | H | Fracture F L | C | M | S | H | Broken B S | Hole H SV | VV | SV | VV | Joint O S | M | L | S | M | L | J S | A | V | H | P | Deformed D | Collapsed Pipe X | Surface Damage S | Lining Failure LF | Point Repair RP | Slope S | WL | PACP Quick Struct Rating | Total Structural Defects | Total Structural Defect Score | Structural Defect Index | Operational and Maintenance: Deposits D AGS | AE B | % | AE L | % | Other Z | % | Roots (R) Fine (F) B | L | J | C | Tap (T) B | L | J | C | Medium (M) B | L | J | C | Ball (B) B | L | J | C | Infiltration I | Obstacles OB G | D | R | W | Vermin V C | Z | Other % | C | R | PACP Quick Maint Rating | Total O&M Defects | Total O&M Defect Score | O&M Defect Index | Construction Features: Tap (Lateral) T FD | FL | BI | BD | D | Line L U | R | LD | RD | Intruding Seal Material IS 3RH | 3RB | 3RL | Z | Miscellaneous M SA | CU | MC | Total Construction Features | Reasons for Survey Aborted | GIS Identified Abandoned | Repair Description | Comments | Recommendations |
|---|---|---

Appendix D-3

| Phase | Priority | Ranking | Repair Completion Date | 2018_Project | General: Contractor | Tape No. | DVD No. | Inspection No. | Reversal Tape No. | Reversal DVD No. | Reversal Inspec. No. | DVD Watched? (Y) | Location: Street Name | CCTV Date | Existing MH ID: Start | Existing MH ID: End | Previous MH ID: Start | Previous MH ID: End | Direction of Camera | Pipe: Existing Sewer ID | Pipe: Previous Sewer ID | Pipe: Size (in) | Pipe: Material | Pipe: Joint Length (ft) | GIS Comment | Length (ft) | CCTV Length (ft) | Structural Defect Coding: Crack C (L C M S H) | Fracture F (L C M S H) | Broken B (SV VV) | Hole H (SV VV) | Joint J: O (S M) | Joint J: L (S M) | Joint J: S (S M L A) | Deformed D | Collapsed Pipe X (V H P) | Surface Damage S | Lining Failure LF | Point Repair RP | Sags WL (S) | PACP Quick Struct Rating | Total Structural Defects | Total Structural Defect Score | Structural Defect Index | Operational and Maintenance: Deposits D (AGS) | Roots (R): Fine (F) (B L J C) | Roots (R): Tap (T) (B L J C) | Roots (R): Medium (M) (B L J C) | Roots (R): Ball (B) (B L J C) | Infiltration I (G D R W) | Obstacles OB: Other (C Z %) | Vermin V (C R) | PACP Quick Maint Rating | Total O&M Defects | Total O&M Defect Score | O&M Defect Index | Construction Features: Tap (Lateral) T (FD FL BI BD) | Line L (D L U R LD RD) | Intruding Seal Material IS (SRH SRB SRL Z) | Miscellaneous M (SA CU MC) | Total Construction Feature | Reasons for Survey Absent | GIS Identified Abandoned | Repair Description | Comments | Recommendations |
|---|---|---

Appendix D-3

Phase	Priority	Ranking	Repair Completion Date	2018_Project	Contractor	Tape No.	DVD No.	Inspection No.	Reversal Tape No.	Reversal DVD No.	Reversal Inspec. No.	DVD Watched? (Y)	Location	Street Name	CCTV Date	Existing MH ID Start	Existing MH ID End	Previous MH ID Start	Previous MH ID End	Direction of Camera	Pipe Existing Sewer ID	Pipe Previous Sewer I.D.	Pipe Size (in)	Pipe Material	Pipe Joint Length (ft)	GIS Comment	Length (ft)	CCTV Length (ft)
3	6_No_Defect	1349			PPT		21	26					LOUISE		6/29/2007	8679	8680	MHK100021	MHK100022	D/S	1986	SPK100026	8	VCP			250	254
2	6_No_Defect	1350					R057	3					PALOMA AV		11/10/2005	11464	11900	MHQ140004	MHP140004	D/S	5423	SPP140022	8	VCP			325	329.7
3	6_No_Defect	1350			PPT		22	6					ROBINET		7/2/2007	8681	8686	MHK100023	MHK100028	D/S	1988	SPK100028	8	VCP			260	266
2	6_No_Defect	1351					R059	1				Y	EASEMENT		11/21/2005	11828	11826	MHP140026	MHP140024	U/S	5296	SPP140039	8	VCP			150	156.4
3	6_No_Defect	1351			PPT		21	13					DALE		6/29/2007	8683	8684	MHK100025	MHK100026	D/S	1990	SPK100030	8	VCP			291	293
2	6_No_Defect	1352					R061	5					BARNETT WY		11/29/2005	11904	11903	MHP140007	MHP140006	U/S	5356	SPP140005	12	VCP			180	180.7
3	6_No_Defect	1352			PPT		21	14					DALE		6/29/2007	8684	8685	MHK100026	MHK100027	D/S	1991	SPK100031	8	VCP			300	301
2	6_No_Defect	1353					R061	8					TRASK AV		11/29/2005	11468	11467	MHQ150007	MHQ150006	U/S	5353	SPQ150003	12	VCP			470	452.6
3	6_No_Defect	1353			PPT		21	15					DALE		6/29/2007	8685	8686	MHK100027	MHK100028	D/S	1992	SPK100032	8	VCP			300	302
2	6_No_Defect	1354					R062	8					NEWHOPE ST		11/30/2005	11447	11448	MHQ130003	MHQ130004	D/S	3713	SPQ130005	8	VCP			330	339.4
3	6_No_Defect	1354			PPT		23	29					DALE		7/9/2007	8686	8672	MHK100028	MHK110015	D/S	1993	SPK100033	8	VCP			303	306
2	6_No_Defect	1355					R067	1					ALLEY		12/9/2005	12114	12113	MHR100019	MHR090001	U/S	5774	SPR100002	8	VCP			200	198.6
3	6_No_Defect	1355			PPT		19	37					HAGA		6/23/2007	9107	9106	MHK100030	MHK100029	U/S	3249	SPK100034	8	VCP			253	253
2	6_No_Defect	1356					R068	1					HARBOR BLVD		12/9/2005	13236	13237	MHR130026	MHR130027	D/S	6395	SPR130026	10	VCP			327	328.1
3	6_No_Defect	1356			PPT		19	36					HAGA		6/23/2007	9108	9107	MHK100031	MHK100030	U/S	3250	SPK100035	8	VCP			252	252
2	6_No_Defect	1357					R068	5					HARBOR BLVD		12/9/2005	13240	13241	MHR140036	MHR140037	D/S	6399	SPR140039	10	VCP			165	168.3
3	6_No_Defect	1357			PPT		19	32					DUDMAN		6/23/2007	9110	9080	MHK100033	MHK100001	D/S	3253	SPK100039	8	VCP			390	384
2	6_No_Defect	1358					S002	5					SUNGROVE ST		10/11/2005	12697	12700	MHS110005	MHS110008	D/S	6381	SPS110002	8	VCP			340	342.1
3	6_No_Defect	1358			PPT		19	41					LORNA		6/23/2007	9101	9100	MHK100035	MHK100034	U/S	3245	SPK100016	8	VCP			258	260
2	6_No_Defect	1359					S002	7					SUNGROVE ST		10/11/2005	12698	12699	MHS110006	MHS110007	D/S	6382	SPS110003	8	VCP			90	88.9
3	6_No_Defect	1359			PPT		19	40					LORNA		6/23/2007	9102	9101	MHK100036	MHK100035	U/S	3246	SPK100017	8	VCP			259	261
2	6_No_Defect	1360					S002	9					ARLETTA CR		10/11/2005	12380	12372	MHT120018	COT120002	U/S	4588	SPT120030	8	VCP			74	82.6
3	6_No_Defect	1360			PPT		20	45					LAMPSON		6/27/2007	8672	8689	MHK110015	MHK110041	U/S	1809	SPK110043	8	VCP			372	368
2	6_No_Defect	1361					S002	11					ARLETTA CR		10/11/2005	12381	12363	MHT120019	COT120001	U/S	5442	SPT120007	8	VCP			55	53.8
3	6_No_Defect	1361			PPT		23	24					LAMPSON		7/7/2007	9093	9094	MHK110032	MHK110031	U/S	4252	SPK110014	12	VCP			180	181
2	6_No_Defect	1362					S002	12					ASPENWOOD AV		10/11/2005	12381	12413	MHT120019	MHT120020	D/S	4589	SPT120031	8	VCP			210	216.4
3	6_No_Defect	1362			PPT		23	23					LAMPSON		7/7/2007	9097	9096	MHK110034	MHK110033	U/S	3240	SPK110016	12	VCP			255	256
2	6_No_Defect	1363					S003	3					AUDREY CR		10/12/2005	12414	12415	MHT120021	MHT120022	D/S	4087	SPT120019	8	VCP			222	220.8
3	6_No_Defect	1363			PPT		23	26					LAMPSON		7/7/2007	9098	9099	MHK110035	MHK110036	D/S	3242	SPK110018	12	VCP			275	106
2	6_No_Defect	1364					S003	10					BLUE SPRUCE AV		10/12/2005	12425	12427	MHT110029	MHT110031	D/S	4476	SPT110036	8	VCP			310	317.3
3	6_No_Defect	1364			PPT		51	30					LOMAY ALLEY		12/26/2007	7600	7004	MHK160001	MHK160016	D/S	647	SPK160027	8	VCP			40	53
2	6_No_Defect	1365					S004	4					ASPENWOOD AV		10/13/2005	12642	12683	MHS120013	MHS120015	D/S	5649	SPS120026	8	VCP			160	158.8
3	6_No_Defect	1365			PPT		51	28					LOMAY ALLEY		12/26/2007	7002	7003	MHK160002	MHK160032	D/S	332	SPK160002	8	VCP			325	326
2	6_No_Defect	1366					S005	1					HEATHER CR		10/14/2005	12706	12707	MHS110010	MHS110011	D/S	6390	SPS110008	8	VCP			365	362.6
3	6_No_Defect	1366			PPT		51	24					LOMAY		12/26/2007	6984	7000	MHK160003	MHK160027	D/S	275	SPK160030	8	VCP			200	192
2	6_No_Defect	1367					S005	8					HASTER ST		10/14/2005	12426	12427	MHT110030	MHT110031	D/S	4478	SPT110038	8	VCP			345	348.3
3	6_No_Defect	1367			PPT		51	23					YOCKEY		12/26/2007	6985	14221	MHK160004	MHK160005	U/S	7902	SPK160005	8	VCP			271	213
2	6_No_Defect	1368	2016-09-22				S006	1					CHAPARRAL DR		10/18/2005	12750	12751	MHS120025	MHS120026	D/S	5654	SPS120034	8	VCP			265	349.7
3	6_No_Defect	1368			PPT		1	6					LARIAT		3/20/2007	6986	7008	MHK160005	MHK160031	D/S	327	SPK160006	8	VCP			80	48
2	6_No_Defect	1369					S007	3					SUNGROVE AV		10/21/2005	12433	12434	MHS120011	MHS120012	D/S	4485	SPS120006	8	VCP			210	218.0
3	6_No_Defect	1369			PPT		1	3					PURDY		3/20/2007	6988	6987	MHK160008	MHK160006	D/S	269	SPK160007	8	VCP			279	280
3	6_No_Defect	1370			PPT		1	2					PURDY		3/20/2007	6989	6988	MHK160010	MHK160008	D/S	271	SPK160009	8	VCP			273	275
3	6_No_Defect	1371			PPT		1	12					RIATA		3/20/2007	0	0	MHK160012	MHK160035	D/S	274	SPK160013	8	VCP			275	279
3	6_No_Defect	1372			PPT		1	15					LOMAY		3/20/2007	0	0	MHK160013	MHK160039	D/S	281	SPK160018	8	VCP			238	242
3	6_No_Defect	1373			PPT		51	34					NEWLAND		12/27/2007	6994	6995	MHK160014	MHK160015	D/S	278	SPK160015	8	VCP			160	161
3	6_No_Defect	1374			PPT		51	33					NEWLAND		12/27/2007	6996	6994	MHK160018	MHK160014	D/S	280	SPK160017	8	VCP			306	309
3	6_No_Defect	1375			PPT		51	35					GARO		12/27/2007	0	0	MHK160018	MHK160017	U/S	279	SPK160016	8	VCP			191	193
3	6_No_Defect	1376			PPT		51	27					LOMAY		12/26/2007	7001	6987	MHK160026	MHK160006	U/S	331	SPK160014B	8	VCP			30	31
3	6_No_Defect	1377			PPT		51	26					LOMAY EASEMENT		12/26/2007	7001	7003	MHK160026	MHK160032	D/S	333	SPK160029	8	VCP			162	164
3	6_No_Defect	1378			PPT		51	25					LOMAY		12/26/2007	0	0	MHK160027	MHK160026	D/S	330	SPK160014	8	VCP			195	201
3	6_No_Defect	1379			PPT		1	10					LARIAT		3/20/2007	0	0	MHK160028	MHK160012	D/S	646	SPK160035	8	VCP			186	188
3	6_No_Defect	1380			PPT		1	8					LARIAT		3/20/2007	0	0	MHK160030	MHK160011	D/S	339	SPK160033	8	VCP			350	354
3	6_No_Defect	1381			PPT		1	1					PURDY		3/20/2007	7014	6989	MHK160033	MHK160010	D/S	273	SPK160011	8	VCP			150	153
3	6_No_Defect	1382			PPT		1	14					RIATA		3/20/2007	7011	6992	MHK160036	MHK160013	D/S	341	SPK160038	8	VCP			280	281
3	6_No_Defect	1383			PPT		1	5					GARO		3/20/2007	7013	6988	MHK160037	MHK160008	D/S	270	SPK160008	8	VCP			152	172
3	6_No_Defect	1384			PPT		1	16					LOMAY		3/20/2007	0	0	MHK160039	MHK160014	D/S	336	SPK160032	8	VCP			240	239
3	6_No_Defect	1385			PPT		37	13					GILBERT		8/29/2007	10033	10042	MHL050048	MHL050049	D/S	3704	SPL050036	8	VCP			364	371
3	6_No_Defect	1386			PPT		37	15					GILBERT		8/29/2007	10107	10108	MHL060001	MHL060002	D/S	4160	SPL060003	10	VCP			275	289
3	6_No_Defect	1387			PPT		46	17					GILBERT		10/16/2007	10111	10110	MHL060005	MHL060004	U/S	4163	SPL060006	10	VCP			75	59
3	6_No_Defect	1388			PPT		46	16					GILBERT		10/16/2007	10112	10111	MHL060006	MHL060005	U/S	4164	SPL060007	10	VCP			285	290
3	6_No_Defect	1389			PPT		46	11					GILBERT		10/16/2007	10112	10075	MHL060006	MHL070045	D/S	4165	SPL060008	10	VCP			286	292
3	6_No_Defect	1390			PPT		39	12					SHANNON		9/6/2007	10144	10145	MHL070003	MHL070004	D/S	5194	SPL070009	8	VCP			330	331
3	6_No_Defect	1391			PPT		46	12					GILBERT		10/16/2007	10075	10076	MHL070045	MHL070046	D/S	3780	SPL070002	10	VCP			290	306
3	6_No_Defect	1392			PPT		46	13					GILBERT		10/16/2007	10076	10077	MHL070046	MHL070047	D/S	3781	SPL070003	10	VCP			235	237
3	6_No_Defect	1393			PPT		46	14					GILBERT		10/16/2007	10077	10090	MHL070047	MHL070048	D/S	3782	SPL070004	10	VCP			325	332
3	6_No_Defect	1394			PPT		46	15					GILBERT		10/16/2007	10090	13906	MHL070048	MHL070049	D/S	7506	SPL070005	10	VCP			290	293
3	6_No_Defect	1395			PPT		49	32					GILBERT		11/8/2007	13906	13905	MHL070049	MHL080001	D/S	7505	SPL080006	10	VCP			370	374
3	6_No_Defect	1396			PPT		46	18					GILBERT		10/16/2007	13904	13903	MHL080002	MHL080003	D/S	7492	SPL080002	10	VCP			225	181
3	6_No_Defect	1400			PPT		20	37					MERCEDES CIR		6/26/2007	9084	9063	MHL090027	MHL090026	U/S	3524	SPL090029	8	VCP			114	114
3	6_No_Defect	1401			PPT		20	35					CORVETTE		6/26/2007	9084	9066	MHL090027	MHL100042	D/S	3525	SPL090030	8	VCP			330	336
3	6_No_Defect	1402			PPT		25	7					CUNNINGHAM		7/13/2007	9068	9067	MHL090029	MHL090028	U/S	3528	SPL090031	8	VCP			109	110
3	6_No_Defect	1403			PPT		25	9					FERRARI		7/13/2007	9071	9070	MHL090031	MHL090030	U/S	3531	SPL090033	8	VCP			95	112
3	6_No_Defect	1404			PPT		21	22					MAGNOLIA		6/29/2007	9074	9075	MHL090032	MHL090033	D/S	3535	SPL090035	8	VCP			327	331
3	6_No_Defect	1405			PPT		21	24					MAGNOLIA		6/29/2007	9076	9077	MHL090034	MHL100046	D/S	3537	SPL100046	8	VCP			215	224
3	6_No_Defect	1406			PPT		20	27					CORVETTE		6/26/2007	9039	9037	MHL100008	MHL100006	U/S	3504	SPL100018	8	VCP			90	92
3	6_No_Defect	1407			PPT		20	28					SHERLOCK		6/26/2007	9039	9038	MHL100008	MHL100007	U/S	3505	SPL100019	8	VCP			330	333
3	6_No_Defect	1408			PPT		22	18					MARLENE		7/3/2007	9043	9041	MHL100012	MHL100010	U/S	3508	SPL100022	8	VCP			255	257
3	6_No_Defect	1409			PPT		22	17					MARLENE		7/3/2007	9044	9043	MHL100013	MHL100012	U/S	3510	SPL100024	8	VCP			158	160
3	6_No_Defect	1410			PPT		22	16					MARLENE		7/3/2007	9046	9044	MHL100015	MHL100013	U/S	3511	SPL100025	8	VCP			158	159
3	6_No_Defect	1411			PPT		22	13					MARLENE		7/3/2007	9046	9047	MHL100015	MHL100016	D/S	3513	SPL100027	8	VCP			189	190
3	6_No_Defect	1412			PPT		22	14					MARLENE		7/3/2007	9047	9051	MHL100016	MHL100020	D/S	3514	SPL100028	8	VCP			190	198
3	6_No_Defect	1413			PPT		21	21					SHERLOCK		6/29/2007	9049	9048	MHL100018	MHL100017	U/S	3515	SPL100029	8	VCP			333	338
3	6_No_Defect	1414			PPT		21	19					MAGNOLIA		6/29/2007	9049	9050	MHL100018	MHL100019	D/S	3516	SPL100030	8	VCP			91	96
3	6_No_Defect	1415			PPT		21	20					MAGNOLIA		6/29/2007	9050	9051	MHL100019	MHL100020	D/S	3517	SPL100031	8	VCP			309	317
3	6_No_Defect	1416			PPT		24	31					MAGNOLIA		7/11/2007	9053	9052	MHL100022	MHL100021	U/S	3519	SPL100033	8	VCP			205	207
3	6_No_Defect	1417			PPT		24	30					MAGNOLIA		7/11/2007	9054	9053	MHL100023	MHL100022	U/S	3520	SPL100034	8	VCP			80	91
3	6_No_Defect	1418			PPT		34	9					LORALEEN		8/14/2007	9592	9589	MHL100026	MHL110029	D/S	3316	SPL100008	8	VCP			382	379
3	6_No_Defect	1419			PPT		20	34					CORVETTE		6/26/2007	9066	9065	MHL100042	MHL100041	U/S	3526	SPL100041	8	VCP			90	99
3	6_No_Defect	1420			PPT		20	30					HEALEY		6/26/2007	9069	9072	MHL100043	MHL100044	D/S	3530	SPL100043	8	VCP			290	293
3	6_No_Defect	1421			PPT		25	8					FERRARI		7/13/2007	9072	9071	MHL100044	MHL090031	U/S	3532	SPL090034	8	VCP			300	303
3	6_No_Defect	1422			PPT		20	31					HEALEY		6/26/2007	9072	9073	MHL100044	MHL100045	D/S	3533	SPL100044	8	VCP			235	235
3	6_No_Defect	1423			PPT		20	32					HEALEY		6/26/2007	9073	9077	MHL100045	MHL100046	D/S	3534	SPL100045	8	VCP			80	53
3	6_No_Defect	1424			PPT		23	16					LAMPSON		7/7/2007	9566	9582	MHL110006	MHL110022	D/S	4243	SPL110006	12	VCP			150	152
3	6_No_Defect	1425			PPT		23	17					LAMPSON		7/7/2007	9582	9588	MHL110022	MHL110028	D/S	4244	SPL110024	12	VCP			200	216
3	6_No_Defect	1426			PPT		23	19					LAMPSON		7/7/2007	9111	9033	MHL110030	MHL110031	D/S	4251	SPL110059	15	VCP			240	317
3	6_No_Defect	1427			PPT		23	20					LAMPSON		7/7/2007	9033	9034	MHL110031	MHL110032	D/S	4248	SPL110037	15	VCP			267	271
3	6_No_Defect	1428			PPT		23	21					LAMPSON		7/7/2007	9034	9035	MHL110032	MHL110033	D/S	4249	SPL110038	15	VCP			266	271
3	6_No_Defect	1429			PPT		23	22					LAMPSON		7/7/2007	9035	0	MHL110033	MHL110034	D/S	7144	SPL110039	15	VCP			280	274
3	6_No_Defect	1430			PPT		24	29					MAGNOLIA		7/11/2007	9055	9036	MHL110063	MHL110034	D/S	3522	SPL110057	8	VCP			35	10
3	6_No_Defect	1431			PPT		1	23					ENLOE		3/22/2007	10596	10394	MHL150016	COL150001	U/S	2595	SPL150008	8	VCP			106	108
3	6_No_Defect	1432			PPT		1	22					ENLOE		3/22/2007	10597	10596	MHL150017	MHL150016	U/S	2596	SPL150009	8	VCP			252	347
3	6_No_Defect	1433			PPT		1	21					ENLOE		3/22/2007	11043	10597	MHL150018	MHL150017	U/S	2297	SPL150036	8	VCP			346	351
3	6_No_Defect	1434			PPT		1	19					MAYS		3/22/2007	10598	10599	MHL150019	MHL150020	D/S	2597	SPL150010	8	VCP			317	319
3	6_No_Defect	1435			PPT		1	20					MAYS		3/22/2007	10599	11065	MHL150020	MHL150021	D/S	2598	SPL150011	8	VCP			318	325
3	6_No_Defect	1436			PPT		51	55					MAYS		12/28/2007	11065	11044	MHL150021	MHL150022	D/S	2299	SPL150038	8	VCP			262	252
3	6_No_Defect	1437			PPT		11	1					MAGNOLIA		5/15/2007	11044	11045	MHL150022	MHL160009	D/S	2469	SPL160015	8	VCP			328	414
3	6_No_Defect	1438			PPT		1	5					McMAINS		3/22/2007	10601	10600	MHL150024	MHL150023	U/S	2599	SPL150012	8	VCP			305	307
3	6_No_Defect	1439			PPT		1	4					McMAINS		3/22/2007	10602	10601	MHL150025	MHL150024	U/S	2600	SPL150013	8	VCP			300	302
3	6_No_Defect	1440			PPT		1	6					LA VAUGHN		3/22/2007	10604	10605	MHL150026	MHL160002	D/S	2603	SPL150014	8	VCP			350	354

Appendix D-3

| Phase | Priority | Ranking | Repair Completion Date | 2018_Project | Contractor | Tape No. | DVD No. | Inspection No. | Reversal Tape No. | Reversal DVD No. | Reversal Inspec. No. | DVD Watched? (Y) | Location | Street Name | CCTV Date | Existing MH ID Start | Existing MH ID End | Previous MH ID Start | Previous MH ID End | Direction of Camera | Pipe Existing Sewer ID | Pipe Previous Sewer I.D. | Pipe Size (in) | Pipe Material | Pipe Joint Length (ft) | Pipe GIS Comment | Length (ft) | CCTV Length (ft) | Crack C | Fracture F | Broken B | Hole H | Joint J | Deformed D | Collapsed Pipe X | Surface Damage S | Lining Failure LF | Point Repair RP | Sags WL | PACP Quick Struct Rating | Total Structural Defects | Total Structural Defect Score | Structural Defect Index | Deposits AGS | Roots (R) Fine (F) AE B | Roots (R) Fine (F) AE % | Roots (R) Fine (F) Other L | Roots (R) Tap (T) AE % | Roots (R) Tap (T) Other Z | Roots (R) Medium (M) Other % | Roots (R) Ball (B) B | Roots (R) Ball (B) L | Roots (R) Ball (B) J | Roots (R) Ball (B) C | Infiltration I | Obstacles OB Other C | Obstacles OB Other Z | Obstacles OB Other % | Vermin V C | Vermin V R | PACP Quick Maint Rating | Total O&M Defects | Total O&M Defect Score | O&M Defect Index | Tap (Lateral) T FD | Tap (Lateral) T FL | Tap (Lateral) T BI | Tap (Lateral) T BD | Line L D | Line L L | Line L U | Line L R | Intruding Seal Material IS LD | Intruding Seal Material IS RD | Intruding Seal Material IS SRH | Intruding Seal Material IS SRB | Intruding Seal Material IS SRL | Intruding Seal Material IS Z | Miscellaneous M SA | Miscellaneous M CU | Miscellaneous M MO | Total Construction Feature | Reasons for Survey Aborted | GIS Identified Abandoned | Repair Description | Comments | Recommendations |
|---|---|---

Appendix D-3

| Phase | Priority | Ranking | Repair Completion Date | 2018_Project | General | | | | | | | | | | | Existing MH ID | | Previous MH ID | | Direction of Camera | Pipe | | | | | | Structural Defect Coding | | | | | | | | | | |

Appendix D-3

| Phase | Priority | Ranking | Repair Completion Date | 2018_Project | General | | | | | | | | | Pipe | | | | | | Structural Defect Coding | | | | | | | | |

Appendix D-3

| Phase | Priority | Ranking | Repair Completion Date | 2018_Project | Contractor | Tape No. | DVD No. | Inspection No. | Reversal Tape No. | Reversal DVD No. | Reversal Inspec. No. | DVD Watched? (Y) | Location | Street Name | CCTV Date | Existing MH ID Start | Existing MH ID End | Previous MH ID Start | Previous MH ID End | Direction of Camera | Pipe Existing Sewer ID | Pipe Previous Sewer ID | Pipe Size (in) | Pipe Material | Pipe Joint Length (ft) | Pipe GIS Comment | Length (ft) | CCTV Length (ft) | Structural Defect Coding: Crack C L | C | M | S | H | Fracture F L | C | M | S | H | Broken B SV | VV | Hole H SV | VV | Joint O S | M | L | S | J S | M | L | A | Deformed D V | H | Collapsed Pipe X P | Surface Damage S | Lining Failure LF | Point Repair RP | Sags WL S | PACP Quick Struct Rating | Total Structural Defects | Total Structural Defect Score | Structural Defect Index | Operational and Maintenance: Deposits AGS | AE B | % | AE L | % | Other Z | % | Roots (R) Fine (F) B | L | J | C | Tap (T) B | L | J | C | Medium (M) B | L | J | C | Ball (B) B | L | J | C | Infiltration I | Obstacles G | D | R | W | Vermin V | OR C | Z | Other % | C | R | PACP Quick Maint Rating | Total O&M Defects | Total O&M Defect Score | O&M Defect Index | Construction Features: Tap (Lateral) FD | FL | BI | BD | Line D | L | U | R | LD | RD | Intruding Seal Material SRH | SRB | SRL | IS Z | SA | Miscellaneous M CU | MO | Total Construction Features | Reasons for Survey Aborted | GIS Identified Abandoned | Repair Description | Comments | Recommendations |
|---|---|---

Appendix D-3

Phase	Priority	Ranking	Repair Completion Date	2018_Project	Contractor	Tape No.	DVD No.	Inspection No.	Reversal Tape No.	Reversal DVD No.	Reversal Inspec. No.	DVD Watched? (Y)	Location	Street Name	CCTV Date	Existing MH ID Start	Existing MH ID End	Previous MH ID Start	Previous MH ID End	Direction of Camera	Existing Sewer ID	Previous Sewer ID	Pipe Size (in)	Pipe Material	Pipe Joint Length (ft)	Pipe GIS Comment	Length (ft)	CCTV Length (ft)	Structural Defect Coding	PACP Quick Struct Rating	Total Structural Defects	Total Structural Defect Score	Structural Defect Index	Operational and Maintenance	PACP Quick Maint Rating	Total O&M Defects	Total O&M Defect Score	O&M Defect Index	Construction Features	Repair Description	Comments	Recommendations
3	6_No_Defect	1887			PPT		10	29						15th ST	5/14/2007	10515	10516	MHN170016	MHN170017	D/S	2259	SPN170016	8	VCP			90	60		0	0	0	0.00			0	0	0.00				
3	6_No_Defect	1888			PPT		10	30						15th ST	5/14/2007	0	0	MHN170017	MHN170019	D/S	2468	SPN170042	8	VCP			350	286		0	0	0	0.00			0	0	0.00				
3	6_No_Defect	1889			PPT		50	5						BROOKHURST EASEMENT	11/12/2007	0	0	MHN170018	MHN170019	D/S	2019	SPN170032	8	VCP			477	482		0	0	0	0.00			0	0	0.00				
3	6_No_Defect	1890			PPT		50	7						BROOKHURST	11/12/2007			MHN170020	MHN170006	D/S		SPN170034	8	VCP			354	354		0	0	0	0.00			0	0	0.00				
3	6_No_Defect	1891			PPT		11	27						FLOWER	5/16/2007	6969	6968	MHN170022	MHN170021	U/S	253	SPN170017	8	VCP			132	136		0	0	0	0.00			0	0	0.00				
3	6_No_Defect	1892	2015-08-18		PPT		11	25						15th ST	5/16/2007	6970	6971	MHN170023	MHN170024	D/S	255	SPN170019	8	VCP			135	130		0	0	0	0.00			0	0	0.00		Replaced section of main and raised pipes to corrected elevations.		
3	6_No_Defect	1893			PPT		6	27						HOPE ST	4/12/2007	6972	6973	MHN170025	MHN170026	D/S	257	SPN170021	8	VCP			148	157		0	0	0	0.00			0	0	0.00				
3	6_No_Defect	1894			PPT		6	29						HOPE ST	4/12/2007	6974	6975	MHN170027	MHN170028	D/S	259	SPN170023	8	VCP			103	141		0	0	0	0.00			0	0	0.00				
3	6_No_Defect	1895			PPT		6	30						HOPE ST	4/12/2007	6975	7264	MHN170033	MHN170028	D/S	46	SPN170002	8	VCP			390	358		0	0	0	0.00			0	0	0.00	2			
3	6_No_Defect	1896			PPT		6	20						MORNINGSIDE	4/12/2007	7296	7264	MHN170031	MHN170033	D/S	135	SPN170005	8	VCP			258	265		0	0	0	0.00			0	0	0.00				
3	6_No_Defect	1897			PPT		2	16						FORSYTH	3/23/2007	10529	10528	MHN170035	MHN170034	U/S	2020	SPN170035	8	VCP			160	159		0	0	0	0.00			0	0	0.00				
3	6_No_Defect	1898			PPT		3	5						13TH	3/27/2007	6894	6895	MHN180002	MHN180003	D/S	190	SPN180030	8	VCP			350	352		0	0	0	0.00			0	0	0.00	3			
3	6_No_Defect	1899			PPT		3	6						13TH	3/27/2007	6895	6896	MHN180003	MHN180004	D/S	191	SPN180031	8	VCP			350	351		0	0	0	0.00			0	0	0.00				
3	6_No_Defect	1900			PPT		51	58						BROOKHURST	12/31/2007	6896	6888	MHN180004	MHN180037	D/S	192	SPN180032	8	VCP			90	120		0	0	0	0.00			0	0	0.00	1			
3	6_No_Defect	1901			PPT		9	16						11th ST	5/4/2007	6898	6899	MHN180007	MHN180008	D/S	195	SPN180035	8	VCP			47	68		0	0	0	0.00			0	0	0.00				
3	6_No_Defect	1902			PPT		7	1						DEANANN	4/18/2007	7267	7268	MHN180013	MHN180014	D/S	140	SPN180003	8	VCP			122	127		0	0	0	0.00			0	0	0.00				
3	6_No_Defect	1903			PPT		7	2						DEANANN	4/18/2007	7268	7269	MHN180014	MHN180015	D/S	141	SPN180004	8	VCP			146	152		0	0	0	0.00			0	0	0.00				
3	6_No_Defect	1904			PPT		7	3						DEANANN	4/18/2007	7269	7270	MHN180015	MHN180016	D/S	142	SPN180005	8	VCP			278	285		0	0	0	0.00			0	0	0.00				
3	6_No_Defect	1905			PPT		7	13					Y	DEANANN	4/25/2007	7270	7271	MHN180016	MHN180017	D/S	143	SPN180006	8	VCP			277	283		0	0	0	0.00			0	0	0.00	1			
3	6_No_Defect	1906			PPT		7	15						ORREY	4/25/2007	7270	7254	MHN180016	MHO180010	U/S	385	SPO180033	8	VCP			385	390		0	0	0	0.00			0	0	0.00				
3	6_No_Defect	1907			GGSD		15	249						JENNRICH	3/29/2004	7277	7276	MHN180019	MHN180018	U/S	145	SPN180008	8	VCP			295	295		0	0	0	0.00			0	0	0.00				
3	6_No_Defect	1908			GGSD		15	249						JENNRICH	3/29/2004	7278	7277	MHN180020	MHN180019	U/S	146	SPN180009	8	VCP			290	285		0	0	0	0.00			0	0	0.00				
3	6_No_Defect	1909			GGSD		15	248					Y	LYNDON	3/29/2004	7280	7281	MHN180022	MHN180023	D/S	149	SPN180012	8	VCP			316	315		0	0	0	0.00			0	0	0.00				
3	6_No_Defect	1910			GGSD		15	250						LYNDON	3/30/2004	7281	7294	MHN180023	MHN180036	D/S	150	SPN180013	8	VCP			320	315		0	0	0	0.00			0	0	0.00				
3	6_No_Defect	1911			GGSD		15	240						FLOWER	3/22/2004	7283	7282	MHN180025	MHN180024	U/S	151	SPN180014	8	VCP			270	270		0	0	0	0.00			0	0	0.00				
3	6_No_Defect	1912			GGSD		15	240						FLOWER	3/22/2004	7284	7283	MHN180026	MHN180025	U/S	152	SPN180015	8	VCP			275	273		0	0	0	0.00			0	0	0.00				
3	6_No_Defect	1913			GGSD		15	237						HARRINGTON	3/18/2004	7286	7285	MHN180028	MHN180027	U/S	154	SPN180017	8	VCP			270	270		0	0	0	0.00			0	0	0.00				
3	6_No_Defect	1914			GGSD		15	237						HARRINGTON	3/18/2004	7287	7286	MHN180029	MHN180028	U/S	155	SPN180018	8	VCP			275	273		0	0	0	0.00			0	0	0.00				
3	6_No_Defect	1915			GGSD		15	242						HOPE	3/24/2004	7289	7288	MHN180031	MHN180030	U/S	375	SPN180020	8	VCP			270	265		0	0	0	0.00			0	0	0.00				
3	6_No_Defect	1916			GGSD		15	242						HOPE	3/24/2004	7290	7289	MHN180032	MHN180031	U/S	376	SPN180021	8	VCP			275	275		0	0	0	0.00			0	0	0.00				
3	6_No_Defect	1917			GGSD		15	243						HOPE	3/25/2004	7291	7290	MHN180033	MHN180032	U/S	377	SPN180022	8	VCP			273	273		0	0	0	0.00			0	0	0.00				
3	6_No_Defect	1918			GGSD		15	238						HARRINGTON	3/22/2004	7292	7287	MHN180034	MHN180029	U/S	1	SPN180019	8	VCP			275	272		0	0	0	0.00			0	0	0.00				
3	6_No_Defect	1919			GGSD		15	245						JOHANNAH	3/25/2004	7292	7291	MHN180034	MHN180033	U/S	378	SPN180023	8	VCP			258	259		0	0	0	0.00			0	0	0.00				
3	6_No_Defect	1920			GGSD		15	241						FLOWER	3/24/2004	7293	7284	MHN180035	MHN180026	U/S	153	SPN180016	8	VCP			275	273		0	0	0	0.00			0	0	0.00				
3	6_No_Defect	1921			GGSD		15	245						JOHANNAH	3/25/2004	7293	7292	MHN180035	MHN180034	U/S	379	SPN180024	8	VCP			256	254		0	0	0	0.00			0	0	0.00				
3	6_No_Defect	1922			GGSD		15	246						JOHANNAH	3/25/2004	7293	7294	MHN180035	MHN180036	D/S	380	SPN180025	8	VCP			258	255		0	0	0	0.00			0	0	0.00				
3	6_No_Defect	1923			GGSD		15	250						LYNDON	3/30/2004	7294	7561	MHN180036	MHN190010	D/S	381	SPN190005	8	VCP			152	166		0	0	0	0.00			0	0	0.00		MHN190004 corrected to MHN190010		
3	6_No_Defect	1924			PPT		28	9						CLARISSA	7/24/2007	9937	9938	MHO050002	MHO050003	D/S	4596	SPO050029	8	VCP			75	85		0	0	0	0.00			0	0	0.00				
3	6_No_Defect	1925			PPT		28	10						CLARISSA	7/24/2007	9938	9939	MHO050003	MHO060017	D/S	4597	SPO060006	8	VCP			235	233		0	0	0	0.00			0	0	0.00				
3	6_No_Defect	1926			PPT		29	2						MOUNT	7/30/2007	9821	9822	MHO050004	MHO060019	D/S	5607	SPO060021	8	VCP			315	315		0	0	0	0.00			0	0	0.00				
3	6_No_Defect	1927			PPT		29	5						RUGH	7/30/2007	9824	9825	MHO050005	MHO060021	D/S	3748	SPO060024	8	VCP			313	310		0	0	0	0.00			0	0	0.00	1			
3	6_No_Defect	1928			PPT		28	29						FULMER	7/25/2007	9827	9828	MHO050006	MHO060023	D/S	3751	SPO060027	8	VCP			322	313		0	0	0	0.00			0	0	0.00	1			
3	6_No_Defect	1929			PPT		28	7						CLARISSA	7/24/2007	10351	9923	MHO050012	MHO050013	D/S	5569	SPO050027	8	VCP			225	227		0	0	0	0.00			0	0	0.00				
3	6_No_Defect	1930			PPT		28	8						CLARISSA	7/24/2007	9923	9937	MHO050013	MHO050002	D/S	4219	SPO050028	8	VCP			225	229		0	0	0	0.00			0	0	0.00				
3	6_No_Defect	1931			PPT		29	1						MOUNT	7/30/2007	10662	9821	MHO050014	MHO050004	D/S	4605	SPO050031	8	VCP			190	202		0	0	0	0.00			0	0	0.00				
3	6_No_Defect	1932			PPT		29	4						RUGH	7/30/2007	10663	9824	MHO050015	MHO050005	D/S	4606	SPO050032	8	VCP			120	130		0	0	0	0.00			0	0	0.00				
3	6_No_Defect	1933			PPT		28	27						OVERMAN	7/25/2007	10665	10664	MHO050016	MHO050017	U/S	4607	SPO050033	8	VCP			266	266		0	0	0	0.00			0	0	0.00				
3	6_No_Defect	1934			PPT		28	28						FULMER	7/25/2007	10666	9827	MHO050018	MHO050006	D/S	4609	SPO050035	8	VCP			253	259		0	0	0	0.00			0	0	0.00				
3	6_No_Defect	1935			PPT		28	26						OVERMAN	7/25/2007	10666	10665	MHO050018	MHO050017	U/S	4608	SPO050034	8	VCP			265	270		0	0	0	0.00			0	0	0.00				
3	6_No_Defect	1936			PPT		32	30						TIBBS ALLEY	8/11/2007	9681	9680	MHO050020	MHO050019	U/S	4079	SPO050005	8	VCP			291	292		0	0	0	0.00			0	0	0.00	1			
3	6_No_Defect	1937			PPT		32	31						TIBBS ALLEY	8/11/2007	9681	9684	MHO050020	MHO050023	D/S	4080	SPO050006	8	VCP			170	164		0	0	0	0.00			0	0	0.00				
3	6_No_Defect	1938			PPT		28	24						TIBBS	7/25/2007	9683	9682	MHO050022	MHO050021	U/S	4456	SPO050007	8	VCP			213	213		0	0	0	0.00			0	0	0.00	1			
3	6_No_Defect	1939			PPT		28	25						TIBBS	7/25/2007	9686	9685	MHO050024	MHN050054	U/S	4552	SPO050010	8	VCP			180	181		0	0	0	0.00			0	0	0.00				
3	6_No_Defect	1940			PPT		28	22						TIBBS	7/25/2007	9686	9684	MHO050024	MHO050023	U/S	4458	SPO050009	8	VCP			156	154		0	0	0	0.00			0	0	0.00				
3	6_No_Defect	1941			PPT		28	16						PALMWOOD	7/25/2007	9686	9690	MHO050024	MHO050029	D/S	4553	SPO050011	8	VCP			234	237		0	0	0	0.00			0	0	0.00				
3	6_No_Defect	1942			PPT		28	12						ALDERSON	7/24/2007	9703	9687	MHO050025	MHO050026	D/S	4565	SPO050019	8	VCP			261	269		0	0	0	0.00			0	0	0.00				
3	6_No_Defect	1943			PPT		28	13						ALDERSON	7/24/2007	9687	9688	MHO050026	MHO050027	D/S	4554	SPO050012	8	VCP			266	267		0	0	0	0.00			0	0	0.00				
3	6_No_Defect	1944			PPT		28	14						ALDERSON	7/24/2007	9688	9689	MHO050027	MHO050028	D/S	4555	SPO050013	8	VCP			346	348		0	0	0	0.00			0	0	0.00				
3	6_No_Defect	1945			PPT		28	15						ALDERSON	7/24/2007	9689	9690	MHO050028	MHO050029	D/S	4556	SPO050014	8	VCP			112	115		0	0	0	0.00			0	0	0.00				
3	6_No_Defect	1946			PPT		28	17						PALMWOOD	7/25/2007	9690	10352	MHO050029	MHN050055	D/S	5010	SPO050036	8	VCP			157	158		0	0	0	0.00			0	0	0.00				
3	6_No_Defect	1947			PPT		32	27						PALMWOOD	8/11/2007	9126	9125	MHO050031	MHO050030	U/S	4261	SPO050015	8	VCP			213	215		0	0	0	0.00			0	0	0.00				
3	6_No_Defect	1948			PPT		33	5						ORANGEWOOD	8/13/2007	9935	9652	MHO060005	COO060001	U/S	4880	SPO060030	8	VCP			150	152		0	0	0	0.00			0	0	0.00				
3	6_No_Defect	1949			PPT		33	6						DOLAN	8/13/2007	9935	9934	MHO060005	MHO060004	U/S	5218	SPO060009	8	VCP			202	203		0	0	0	0.00			0	0	0.00				
3	6_No_Defect	1950			PPT		33	1						ORANGEWOOD	8/13/2007	9935	9811	MHO060005	MHO060007	D/S	5219	SPO060010	8	VCP			255	267		0	0	0	0.00			0	0	0.00				
3	6_No_Defect	1951			PPT		33	15						BAGGETT	8/13/2007	9810	9811	MHO060006	MHO060007	D/S	5220	SPO060011	8	VCP			324	324		0	0	0	0.00			0	0	0.00		Pipe SPO06000013 corrected to SPO060011		
3	6_No_Defect	1952			PPT		33	2						ORANGEWOOD	8/13/2007	9811	9813	MHO060007	MHO060009	D/S	5221	SPO060012	8	VCP			255	266		0	0	0	0.00			0	0	0.00				
3	6_No_Defect	1953			PPT		33	13						TOBIE	8/13/2007	9814	9815	MHO060010	MHO060011	D/S	5599	SPO060015	8	VCP			324	330		0	0	0	0.00			0	0	0.00				
3	6_No_Defect	1954			PPT		33	4						ORANGEWOOD	8/13/2007	9815	9820	MHO060011	MHO060015	D/S	5600	SPO060016	8	VCP			275	274		0	0	0	0.00			0	0	0.00				
3	6_No_Defect	1955			PPT		33	10						PERRIN	8/13/2007	9816	9936	MHO060013	MHO060012	U/S	5601	SPO060017	8	VCP			351	353		0	0	0	0.00			0	0	0.00				
3	6_No_Defect	1956			PPT		33	9						PERRIN	8/13/2007	9817	9816	MHO060014	MHO060013	U/S	5602	SPO060018	8	VCP			350	351		0	0	0	0.00			0	0	0.00	1			
3	6_No_Defect	1957			PPT		33	31						ORANGEWOOD	8/14/2007	9820	9656	MHO060015	CON060005	D/S	5606	SPN060003	8	VCP			130	135		0	0	0	0.00			0	0	0.00				
3	6_No_Defect	1958			PPT		33	38						PALMWOOD	8/14/2007	9820	10676	MHO060015	MHO070025	U/S	4710	SPO070025	8	VCP			315	325		0	0	0	0.00			0	0	0.00				
3	6_No_Defect	1959			PPT		28	6						PARLIAMENT	7/24/2007	0	0	MHO060018	MHO060005	D/S	4220	SPO060005	8	VCP			134	143		0	0	0	0.00			0	0	0.00				
3	6_No_Defect	1960			PPT		28	1						PARLIAMENT	7/24/2007	9940	9823	MHO060018	MHO060020	D/S	4881	SPO060031	8	VCP			265	267		0	0	0	0.00			0	0	0.00				
3	6_No_Defect	1961			PPT		29	3						MOUNT	7/30/2007	9822	9823	MHO060019	MHO060020	D/S	3746	SPO060022	8	VCP			315	315		0	0	0	0.00			0	0	0.00				
3	6_No_Defect	1962			PPT		28	2						PARLIAMENT	7/24/2007	9823	9826	MHO060020	MHO060022	D/S	3747	SPO060023	8	VCP			265	267		0	0	0	0.00			0	0	0.00				
3	6_No_Defect	1963			PPT		28	3						PARLIAMENT	7/24/2007	9826	9829	MHO060022	MHO060024	D/S	3750	SPO060026	8	VCP			266	267		0	0	0	0.00			0	0	0.00				
3	6_No_Defect	1964			PPT		28	4						PARLIAMENT	7/24/2007	9829	9832	MHO060024	MHN060004	D/S	3753	SPO060029	8	VCP			266	267		0	0	0	0.00			0	0	0.00				
3	6_No_Defect	1965			PPT		27	1						VERNA	7/19/2007	10623	10624	MHO070001	MHO070002	D/S	5570	SPO070001	8	VCP			264	264		0	0	0	0.00			0	0	0.00				
3	6_No_Defect	1966			PPT		27	4						ELIZABETH	7/19/2007	10626	10625	MHO070004	MHO070003	U/S	5572	SPO070003	8	VCP			335	339		0	0	0	0.00			0	0	0.00	2			
3	6_No_Defect	1967			PPT		27	5						LA DONA	7/19/2007	10626	10627	MHO070004	MHO070005	D/S	5573	SPO070004	8	VCP			309	312		0	0	0	0.00			0	0	0.00				
3	6_No_Defect	1968			PPT		27	3						VERNA EAZEMENT	7/19/2007	10627	10628	MHO070005	MHO070006	D/S	5574	SPO070005	8	VCP			140	157		0	0	0	0.00			0	0	0.00				
3	6_No_Defect	1969			PPT		26	21						STEELE	7/18/2007	10630	10634	MHO070008	MHO070013	D/S	3715	SPO070008	8	VCP			135	138		0	0	0	0.00			0	0	0.00				
3	6_No_Defect	1970			PPT		26	7						VICKERS	7/18/2007	10631	9769	MHO070010	MHO070009	U/S	4600	SPO070019	8	VCP			258	266		0	0	0	0.00			0	0	0.00				
3	6_No_Defect	1971			PPT		26	6						VICKERS	7/18/2007	10632	10631	MHO070011	MHO070010	U/S	3716	SPO070009	8	VCP			256	257		0	0	0	0.00			0	0	0.00	1			
3	6_No_Defect	1972			PPT		26	5						VICKERS	7/18/2007	10633	10632	MHO070012	MHO070011	U/S	3717	SPO070010	8	VCP			295	298		0	0	0	0.00			0	0	0.00	1			
3	6_No_Defect	1973			PPT		26	8						VICKERS	7/18/2007	10634	9925	MHO070013	MHO070014	D/S	3719	SPO070012	8	VCP			250	265		0	0	0	0.00			0	0	0.00				
3	6_No_Defect	1974			PPT		26	11						MEDINA	7/18/2007	9926	9925	MHO070015	MHO070014	U/S	3720	SPO070013	8	VCP			297	298		0	0	0	0.00			0	0	0.00	1			
3	6_No_Defect	1975			PPT		26	15						STEELE	7/18/2007	10635	10636	MHO070016	MHO070017	D/S	4100	SPO070015	8	VCP			300	301		0	0	0	0.00			0	0	0.00				
3	6_No_Defect	1976			PPT		26	16						STEELE	7/18/2007	10636	10647	MHO070017	MHO080015	D/S	4101	SPO080007	8	VCP			283	286		0	0	0	0.00			0	0	0.00	1			
3	6_No_Defect	1977			PPT		26	33						DANBERRY	7/19/2007	10637	9770	MHO070019	MHO070018	U/S	4601	SPO070020	8	VCP			239	240		0	0	0	0.00			0	0	0.00	1			
3	6_No_Defect	1978			PPT		26	34						DANBERRY	7/19/2007	10639	10638	MHO070021	MHO070020	U/S	4103	SPO070017	8	VCP			267	269		0	0	0	0.00			0	0	0.00				
3	6_No_Defect	1979			PPT		32	35						GERALDINE	8/11/2007	10673	9654	MHO070022	COO070002	U/S	4613	SPO070021	8	VCP			150	152		0	0	0	0.00			0	0	0.00				
3	6_No_Defect	1980			PPT		32	32						GERALDINE	8/11/2007	10673	10674	MHO070022	MHO070023	D/S	4707	SPO070022	8	VCP			224	224		0	0	0	0.00			0	0	0.00				
3	6_No_Defect	1981			PPT		32	33						GERALDINE	8/11/2007	10674	10675	MHO070023	MHO070024	D/S	4708	SPO070023	8	VCP			223	225		0	0	0	0.00			0	0	0.00				
3	6_No_Defect	1982			PPT		32	34						GERALDINE	8/11/2007	10675	10676	MHO070024	MHO070025	D/S	4709	SPO070024	8	VCP			345	330		0	0	0	0.00			0	0	0.00				
3	6_No_Defect	1983			PPT		27	40						DOLAN	7/24/2007	9932	9931	MHO070027	MHO070026	U/S	4711	SPO070026	8	VCP			215	198		0	0	0	0.00			0	0	0.00				
3	6_No_Defect	1984			PPT		27	39						DOLAN	7/24/2007	10677	9932	MHO070029	MHO070027	U/S	4712	SPO070027	8	VCP			170	185		0	0	0	0.00			0	0	0.00				
3	6_No_Defect	1985			PPT		27	41						LA DONA	7/24/2007	10677	10660	MHO070029	MHO070028	U/S	4879	SPO070044	8	VCP			230	235		0	0	0	0.00			0	0	0.00				
3	6_No_Defect	1986			PPT		27	36						LA DONA	7/24/2007	10677	9778	MHO070029	MHO070030	D/S	4713	SPO070028	8	VCP			150	161		0	0	0	0.00			0	0	0.00				
3	6_No_Defect	1987			PPT		27	37						LA DONA	7/24/2007	9778	9780	MHO070030	MHO070032	D/S	4714	SPO070029	8	VCP			280	281		0	0	0	0.00			0	0	0.00				
3	6_No_

Appendix D-3

| Phase | Priority | Ranking | Repair Completion Date | 2018_Project | Contractor | Tape No. | DVD No. | Inspection No. | Reversal Tape No. | Reversal DVD No. | Reversal Inspec. No. | DVD Watched? (Y) | Location | | Existing MH ID | | Previous MH ID | | Direction of Camera | Pipe | | | | | Structural Defect Coding | | | | |

Appendix D-3

Phase	Priority	Ranking	Repair Completion Date	2018_Project	Contractor	Tape No.	DVD No.	Inspection No.	Reversal Tape No.	Reversal DVD No.	Reversal Inspec. No.	DVD Watched? (Y)	Location	Street Name	CCTV Date	Existing MH ID Start	Existing MH ID End	Previous MH ID Start	Previous MH ID End	Direction of Camera	Existing Sewer ID	Previous Sewer ID	Pipe Size (in)	Pipe Material	Pipe Joint Length (ft)	Pipe GIS Comment	Length (ft)	CCTV Length (ft)	Structural Defect Coding	PACP Quick Struct Rating	Total Structural Defects	Total Structural Defect Score	Structural Defect Index	Operational and Maintenance	PACP Quick Maint Rating	Total O&M Defects	Total O&M Defect Score	O&M Defect Index	Construction Features	Miscellaneous	Total Construction Features	Reasons for Survey Aband	GIS Identified Abandoned	Repair Description	Comments	Recommendations
3	6_No_Defect	2107	2018-03-27		PPT		9	34					WARD		5/4/2007	10467	10466	MHO160050	MHO160049	U/S	2179	SPO160045	8	VCP			250	253			0	0	0.00			0	0	0.00	4					Plumber replaced all on property lateral with 4" ABS and removed intruding roots, still had sag in street so we replaced 10' of VCP with 4" PVC.		
3	6_No_Defect	2108			PPT		13	16					TAFT		5/31/2007	10996	10995	MHO160053	MHO160052	U/S	4616	SPO160021	8	VCP			95	163			0	0	0.00			0	0	0.00									
3	6_No_Defect	2109			PPT		13	18					TAFT		5/31/2007	10996	10997	MHO160053	MHO160054	D/S	4617	SPO160022	8	VCP			10	10			0	0	0.00			0	0	0.00									
3	6_No_Defect	2110			PPT		11	18					WESTMINSTER		5/16/2007	0	0	MHO170002	MHO170003	D/S	2306	SPO170030	12	VCP			30	29			0	0	0.00			0	0	0.00									
3	6_No_Defect	2111			PPT		11	19					WESTMINSTER		5/16/2007	0	0	MHO170003	MHO170004	D/S	2307	SPO170031	12	VCP			270	267			0	0	0.00			0	0	0.00									
3	6_No_Defect	2112			PPT		11	20					WESTMINSTER		5/16/2007	0	0	MHO170004	MHO170005	D/S	2308	SPO170032	12	VCP			120	124			0	0	0.00			0	0	0.00									
3	6_No_Defect	2113			PPT		52	34					WESTMINSTER AVE		12/28/2007	0	0	MHO170005	MHO160020	U/S	2175	SPO170034	8	VCP			110	113			0	0	0.00			0	0	0.00									
3	6_No_Defect	2114			PPT		11	22					WESTMINSTER		5/16/2007	10456	10468	MHO170006	MHN170001	D/S	2311	SPN170024	12	VCP			320	332			0	0	0.00			0	0	0.00									
3	6_No_Defect	2115			PPT		11	8					WESTMINSTER		5/15/2007	10422	10421	MHO170008	MHO170007	U/S	2302	SPO170016	12	VCP			300	291			0	0	0.00			0	0	0.00	1								
3	6_No_Defect	2116			PPT		11	7					WESTMINSTER		5/15/2007	0	0	MHO170009	MHO170008	U/S	2303	SPO170017	12	VCP			330	332			0	0	0.00			0	0	0.00									
3	6_No_Defect	2117			PPT		6	7					KEEL		4/12/2007	6941	6942	MHO170011	MHO170012	D/S	234	SPO170019	8	VCP			260	259			0	0	0.00			0	0	0.00	1								
3	6_No_Defect	2118			PPT		6	8					KEEL		4/12/2007	6942	6946	MHO170012	MHO170016	D/S	235	SPO170020	8	VCP			260	262			0	0	0.00			0	0	0.00									
3	6_No_Defect	2119			PPT		5	11					LAKE		4/11/2007	0	0	MHO170015	MHO170013	U/S	236	SPO170021	8	VCP			95	82			0	0	0.00			0	0	0.00								COO170003 corrected to MHO170013	
3	6_No_Defect	2120			PPT		5	12					KEEL		4/11/2007	6945	6944	MHO170015	MHO170014	U/S	237	SPO170022	8	VCP			236	239			0	0	0.00			0	0	0.00	1								
3	6_No_Defect	2121			PPT		5	8					LAKE		4/11/2007	6945	6946	MHO170015	MHO170016	D/S	238	SPO170023	8	VCP			63	64			0	0	0.00			0	0	0.00									
3	6_No_Defect	2122			PPT		5	10					LAKE		4/11/2007	6947	6803	MHO170017	MHO170024	D/S	39	SPO170001	8	VCP			388	394			0	0	0.00			0	0	0.00									
3	6_No_Defect	2123			PPT		5	10					TAFT		4/10/2007	6949	6948	MHO170019	MHO170018	U/S	240	SPO170025	8	VCP			356	357			0	0	0.00			0	0	0.00									
3	6_No_Defect	2124			PPT		5	9					TAFT		4/10/2007	6801	6949	MHO170020	MHO170019	U/S	40	SPO170002	8	VCP			355	357			0	0	0.00			0	0	0.00									
3	6_No_Defect	2125			PPT		5	4					MORNINGSIDE		4/10/2007	6801	6802	MHO170020	MHO170023	D/S	65	SPO170008	8	VCP			260	262			0	0	0.00			0	0	0.00									
3	6_No_Defect	2126			PPT		6	9					PLEASANT		4/12/2007	6950	6951	MHO170021	MHO170022	D/S	241	SPO170026	8	VCP			257	260			0	0	0.00			0	0	0.00									
3	6_No_Defect	2127			PPT		5	5					MORNINGSIDE		4/10/2007	6802	6803	MHO170023	MHO170024	D/S	66	SPO170009	8	VCP			260	263			0	0	0.00			0	0	0.00									
3	6_No_Defect	2128			PPT		5	6					MORNINGSIDE		4/10/2007	6803	6884	MHO170024	MHO170025	D/S	171	SPO170015	8	VCP			372	375			0	0	0.00			0	0	0.00		1							
3	6_No_Defect	2129			PPT		5	8					MORNINGSIDE		4/10/2007	7238	6781	MHO170026	MHO170047	D/S	664	SPO170046	8	VCP			130	107			0	0	0.00			0	0	0.00		2							
3	6_No_Defect	2130			PPT		9	15					TAFT EASEMENT		5/3/2007	6953	6954	MHO170028	MHO170029	D/S	243	SPO170028	8	VCP			299	306			0	0	0.00			0	0	0.00									
3	6_No_Defect	2131			PPT		8	14					COMMERCE ST EASEMENT		4/27/2007	6785	6954	MHO170030	MHO170029	U/S	42	SPO170004	8	VCP			380	382			0	0	0.00			0	0	0.00									
3	6_No_Defect	2132			PPT		7	28					ALLEY E/HOPE		4/25/2007	6955	6956	MHO170031	MHO170032	D/S	244	SPO170035	8	VCP			287	283			0	0	0.00			0	0	0.00									
3	6_No_Defect	2133			PPT		6	11					16th ST.		4/12/2007	6957	6958	MHO170033	MHO170034	D/S	245	SPO170036	8	VCP			292	295			0	0	0.00			0	0	0.00	2								
3	6_No_Defect	2134			PPT		6	13					16th ST.		4/12/2007	6959	6973	MHO170035	MHN170026	D/S	261	SPN170026	8	VCP			292	291			0	0	0.00			0	0	0.00									
3	6_No_Defect	2135			PPT		7	27					ALLEY W/BOWEN		4/25/2007	6961	6784	MHO170037	COO170002	U/S	248	SPO170039	8	VCP			236	283			0	0	0.00			0	0	0.00									
3	6_No_Defect	2136			PPT		7	25					BOWEN		4/25/2007	6962	6963	MHO170038	MHO170039	D/S	250	SPO170041	8	VCP			270	272			0	0	0.00			0	0	0.00									
3	6_No_Defect	2137			PPT		7	26					BOWEN		4/25/2007	6963	7239	MHO170039	MHO170040	D/S	43	SPO170005	8	VCP			270	271			0	0	0.00			0	0	0.00	1								
3	6_No_Defect	2138			PPT		5	7					MORNINGSIDE		4/11/2007	7239	7240	MHO170040	MHO170043	D/S	27	SPO170012	8	VCP			256	257			0	0	0.00			0	0	0.00									
3	6_No_Defect	2139			PPT		6	21					STENGEL		4/12/2007	7240	6965	MHO170043	MHO170042	U/S	44	SPO170006	8	VCP			275	277			0	0	0.00			0	0	0.00	1								
3	6_No_Defect	2140			PPT		6	18					MORNINGSIDE		4/12/2007	7240	7241	MHO170043	MHO170046	D/S	28	SPO170013	8	VCP			256	258			0	0	0.00			0	0	0.00									
3	6_No_Defect	2141			PPT		6	24					BOONY		4/12/2007	6967	7241	MHO170045	MHO170046	D/S	45	SPO170007	8	VCP			275	276			0	0	0.00			0	0	0.00									
3	6_No_Defect	2142			PPT		8	13					COMMERCE ST EASEMENT		4/27/2007	6804	6785	MHO180001	MHO170030	U/S	67	SPO180001	8	VCP			380	383			0	0	0.00			0	0	0.00									
3	6_No_Defect	2143			PPT		7	8					JENNRICH		4/18/2007	6805	6804	MHO180002	MHO180001	U/S	68	SPO180002	8	VCP			32	29			0	0	0.00			0	0	0.00									
3	6_No_Defect	2144			PPT		7	4					JENNRICH		4/18/2007	6805	6806	MHO180002	MHO180016	D/S	69	SPO180003	8	VCP			310	309			0	0	0.00			0	0	0.00									
3	6_No_Defect	2145			PPT		7	9					JENNRICH		4/18/2007	7247	7248	MHO180003	MHO180004	D/S	126	SPO180022	8	VCP			270	373			0	0	0.00			0	0	0.00	1								
3	6_No_Defect	2146			PPT		7	10					JENNRICH		4/18/2007	7248	7249	MHO180004	MHO180005	D/S	127	SPO180023	8	VCP			370	373			0	0	0.00			0	0	0.00									
3	6_No_Defect	2147			PPT		7	11					JENNRICH		4/18/2007	7249	7267	MHO180005	MHO180013	D/S	383	SPO180031	8	VCP			450	352			0	0	0.00			0	0	0.00									
3	6_No_Defect	2148			PPT		7	17					McCLURE		4/25/2007	7250	7251	MHO180006	MHO180007	D/S	128	SPO180024	8	VCP			325	322			0	0	0.00			0	0	0.00									
3	6_No_Defect	2149			PPT		7	21					BOWEN		4/25/2007	7256	7257	MHO180012	MHO180013	D/S	132	SPO180028	8	VCP			213	214			0	0	0.00			0	0	0.00									
3	6_No_Defect	2150			PPT		7	5					JENNRICH		4/18/2007	6806	6807	MHO180016	MHO180017	D/S	70	SPO180004	8	VCP			361	322			0	0	0.00			0	0	0.00									
3	6_No_Defect	2151			PPT		7	7					JENNRICH		4/18/2007	6808	7242	MHO180018	MHO180019	D/S	172	SPO180035	8	VCP			315	324			0	0	0.00			0	0	0.00									
3	6_No_Defect	2152			PPT		6	14					WARD ST		4/12/2007	7242	7243	MHO180019	MHO180020	D/S	29	SPO180018	8	VCP			290	292			0	0	0.00			0	0	0.00									
3	6_No_Defect	2153			PPT		6	15					WARD ST		4/12/2007	7243	7244	MHO180020	MHO180021	D/S	30	SPO180019	8	VCP			270	269			0	0	0.00			0	0	0.00									
3	6_No_Defect	2154			PPT		6	16					WARD ST		4/12/2007	7244	7245	MHO180021	MHO180034	D/S	31	SPO180020	8	VCP			270	276			0	0	0.00			0	0	0.00									
3	6_No_Defect	2155			PPT		4	15					TAFT		4/4/2007	6810	6809	MHO180023	MHO180022	U/S	72	SPO180006	8	VCP			350	353			0	0	0.00			0	0	0.00									
3	6_No_Defect	2156			PPT		4	14					TAFT		4/4/2007	6811	6810	MHO180024	MHO180023	U/S	73	SPO180007	8	VCP			350	353			0	0	0.00			0	0	0.00									
3	6_No_Defect	2157			PPT		4	10					KERN		4/4/2007	6811	6814	MHO180024	MHO180027	D/S	74	SPO180008	8	VCP			266	267			0	0	0.00			0	0	0.00									
3	6_No_Defect	2158			PPT		5	1					PLEASANT		4/9/2007	6812	6813	MHO180025	MHO180026	D/S	75	SPO180009	8	VCP			350	351			0	0	0.00			0	0	0.00									
3	6_No_Defect	2159			PPT		5	2					PLEASANT		4/9/2007	6813	6814	MHO180026	MHO180027	D/S	76	SPO180010	8	VCP			350	353			0	0	0.00			0	0	0.00									
3	6_No_Defect	2160			PPT		5	3					LAKE		4/9/2007	6815	6816	MHO180028	MHO180029	D/S	78	SPO180012	8	VCP			350	355			0	0	0.00			0	0	0.00									
3	6_No_Defect	2161			PPT		4	12					KERN		4/4/2007	6817	6820	MHO180030	MHO180033	D/S	80	SPO180014	8	VCP			285	286			0	0	0.00			0	0	0.00									
3	6_No_Defect	2162			PPT		5	3					JESSICA		4/10/2007	6819	6820	MHO180032	MHO180033	D/S	82	SPO180016	8	VCP			350	351			0	0	0.00			0	0	0.00	2								
3	6_No_Defect	2163			PPT		6	17					WARD ST		4/12/2007	7245	7246	MHO180034	MHO190008	D/S	32	SPO180021	8	VCP			320	321			0	0	0.00			0	0	0.00									
3	6_No_Defect	2164			PPT		6	4					HAZARD		4/12/2007	7261	7262	MHO190002	MHO190003	D/S	315	SPO190023	10	VCP			340	343			0	0	0.00			0	0	0.00									
3	6_No_Defect	2165			PPT		6	5					HAZARD		4/12/2007	7262	7272	MHO190003	MHN190001	D/S	320	SPN190024	10	VCP			340	345			0	0	0.00			0	0	0.00									
3	6_No_Defect	2166			PPT		5	2					HAZARD		4/11/2007	6822	6823	MHO190005	MHO190006	D/S	84	SPO190002	8	VCP			320	322			0	0	0.00			0	0	0.00	2								
3	6_No_Defect	2167			PPT		5	3					HAZARD		4/11/2007	6823	6824	MHO190006	MHO190007	D/S	85	SPO190003	8	VCP			320	323			0	0	0.00			0	0	0.00	1								
3	6_No_Defect	2168			PPT		4	6					PLEASANT		4/4/2007	6829	6828	MHO190012	MHO190013	U/S	90	SPO190008	8	VCP			295	300			0	0	0.00			0	0	0.00								MHO190012. D/S MHO190009 corrected to MHO190013.	
3	6_No_Defect	2169			PPT		4	6					SAIL ST.		4/2/2007	6830	6778	MHO190013	COO190001	U/S	92	SPO190010	8	VCP			94	92			0	0	0.00			0	0	0.00								MHO190013 corrected to MHO190014	
3	6_No_Defect	2170			PPT		4	9					TAFT		4/4/2007	6832	6831	MHO190016	MHO190015	U/S	218	SPO190012	8	VCP			158	158			0	0	0.00			0	0	0.00									
3	6_No_Defect	2171			PPT		4	7					CATALINA		4/4/2007	6832	6833	MHO190016	MHO190017	D/S	219	SPO190013	8	VCP			172	179			0	0	0.00			0	0	0.00									
3	6_No_Defect	2172			PPT		4	8					CATALINA		4/4/2007	6833	6834	MHO190017	MHO190018	D/S	94	SPO190014	8	VCP			362	359			0	0	0.00			0	0	0.00									
3	6_No_Defect	2173			PPT		4	2					SAIL ST.		4/2/2007	6834	6836	MHO190018	MHO190020	D/S	95	SPO190015	8	VCP			256	258			0	0	0.00			0	0	0.00									
3	6_No_Defect	2174			PPT		5	5					AMBER CIR		4/9/2007	6835	6836	MHO190019	MHO190020	D/S	96	SPO190016	8	VCP			256	258			0	0	0.00			0	0	0.00									
3	6_No_Defect	2175			PPT		4	3					SAIL ST.		4/2/2007	6836	6838	MHO190020	MHO190022	D/S	24	SPO190020	8	VCP			256	257			0	0	0.00			0	0	0.00									
3	6_No_Defect	2176			PPT		5	6					SILVER CIR		4/9/2007	6837	6838	MHO190021	MHO190022	D/S	98	SPO190018	8	VCP			256	256			0	0	0.00			0	0	0.00									
3	6_No_Defect	2177			PPT		4	5					SAIL ST.		4/2/2007	6839	6841	MHO200001	MHO200003	D/S	100	SPO200001	8	VCP			152	153			0	0	0.00			0	0	0.00									
3	6_No_Defect	2178			PPT		4	1					WARD		4/4/2007	7297	7298	MHO200005	MHO200009	D/S	387	SPO200015	8	VCP			265	266			0	0	0.00			0	0	0.00									
3	6_No_Defect	2179			PPT		4	14					KETCH		4/3/2007	6843	6844	MHO200006	MHO200007	D/S	103	SPO200004	8	VCP			295	297			0	0	0.00			0	0	0.00									
3	6_No_Defect	2180			PPT		4	15					KETCH		4/3/2007	6844	6885	MHO200007	MHO200008	D/S	104	SPO200005	8	VCP			320	323			0	0	0.00			0	0	0.00		1	1						
3	6_No_Defect	2181			PPT		5	1					KETCH		4/10/2007	7298	6885	MHO200009	MHO200008	U/S	176	SPO200021	8	VCP			320	319			0	0	0.00			0	0	0.00									
3	6_No_Defect	2182			PPT		4	2					WARD		4/4/2007	7298	7299	MHO200009	MHO200013	D/S	388	SPO200016	8	VCP			270	274			0	0	0.00			0	0	0.00									
3	6_No_Defect	2183			PPT		4	12					SCHOONER		4/3/2007	6846	6886	MHO200011	MHO200012	D/S	106	SPO200007	8	VCP			320	322			0	0	0.00			0	0	0.00									
3	6_No_Defect	2184			PPT		4	13					SCHOONER		4/3/2007	6886	7299	MHO200012	MHO200013	D/S	177	SPO200022	8	VCP			320	320			0	0	0.00			0	0	0.00									
3	6_No_Defect	2185			PPT		4	3					WARD		4/4/2007	7299	7300	MHO200013	MHO200021	D/S	389	SPO200017	8	VCP			265	269			0	0	0.00			0	0	0.00									
3	6_No_Defect	2186			PPT		4	5					STARBOARD		4/3/2007	6849	6851	MHO200016	MHO200018	D/S	109	SPO200010	8	VCP			259	271			0	0	0.00			0	0	0.00									
3	6_No_Defect	2187			PPT		4	10					STARBOARD		4/3/2007	6851	6850	MHO200018	MHO200017	U/S	110	SPO200011	8	VCP			290	292			0	0	0.00			0	0	0.00									
3	6_No_Defect	2188			PPT		4	7					STERN		4/3/2007	6851	6852	MHO200018	MHO200019	D/S	111	SPO200012	8	VCP			397	399			0	0	0.00			0	0	0.00									
3	6_No_Defect	2189			PPT		4	9					STERN		4/3/2007	6853	7300	MHO200020	MHO200021	D/S	178	SPO200023	8	VCP			396	395			0	0	0.00			0	0	0.00	2								
3	6_No_Defect	2190			PPT		6	1					WARD		4/12/2007	7300	7301	MHO200021	MHO200023	D/S	390	SPO200018	8	VCP			186	206			0	0	0.00			0	0	0.00		2							
3	6_No_Defect	2191			PPT		52	35					ALLEYWAY		12/28/2007	6887	6780	MHO200022	COO200001	U/S	113	SPO200014	8	VCP			114	102			0	0	0.00			0	0	0.00									
3	6_No_Defect	2192			GGSD		7	136					STARBOARD		1/5/2004	6855	6854	MHO210002	MHO210001	U/S	114	SPO210001	8	VCP			361	392			0	0	0.00			0	0	0.00									
3	6_No_Defect	2193			GGSD		7	137					STARBOARD		1/5/2004	6856	6855	MHO210003	MHO210002	U/S	115	SPO210002	8	VCP			329	362			0	0	0.00			0	0	0.00									
3	6_No_Defect	2194			GGSD		9	179					SAIL		2/3/2004	6859	6860	MHO210005	MHO210006	D/S	119	SPO210005	8	VCP			272	305			0	0	0.00			0	0	0.00									
3	6_No_Defect	2195			GGSD		9	179					SAIL		2/3/2004	6860	6861	MHO210006	MHO210007	D/S	120	SPO210006	8	VCP			222	210			0	0	0.00			0	0	0.00									
3	6_No_Defect	2196			GGSD		8	141					HENDERSON		1/7/2004	6862	7619	MHO210008	Burried MH	U/S	665	SPO210014	8	VCP			142	98			0	0	0.00			0	0	0.00									
3	6_No_Defect	2197			GGSD		8	141					HENDERSON		1/7/2004	6864	6862	MHO210010	MHO210008	U/S	122	SPO210008	8	VCP			350	346			0	0	0.00			0	0	0.00								Inspection is from MHO210010 to MHO210002. Manhole found at 345.8' (MHO210008).	
3	6_No_Defect	2198			GGSD		8	140					HENDERSON		1/6/2004	6864	6863	MHO210010	MHO210009	U/S	123	SPO210009	8	VCP			154	151			0	0	0.00			0	0	0.00									
3	6_No_Defect	2199			GGSD		8	143					YAWL		1/7/2004	6866	6865	MHO210012	MHO210011	U/S	125	SPO210011	8	VCP			388	354			0	0	0.00			0	0	0.00									
3	6_No_Defect	2200			GGSD		9	173					REEVE		1/28/2004	6867	6868	MHO210013	MHO210014	D/S	3	SPO210013	8	VCP			302	321			0	0	0.00			0	0	0.00									
3	6_No_Defect	2201			PPT		51	50					BOLSA		12/28/2007	7302	7303	MHO210018	MHO210019	D/S	392	SPO210015	8	VCP			30	12			0	0	0.00			0	0	0.00		1		1				MSA = Bends	
3	6_No_Defect	2202			GGSD		7	132					BARBETTE		12/19/2003	6869	7307	MHO220003	MHO220004	D/S	181	SPO220029	8	VCP			319	307			0	0	0.00			0	0	0.00									
3	6_No_Defect	2203			GGSD		7	132					BARBETTE		12/19/2003	7307	7308	MHO220004	MHO220005	D/S	396	SPO220019	8	VCP			258	335			0	0	0.00			0	0	0.00								MHO220016 corrected to MHO220005	
3	6_No_Defect	2204			GGSD		6	130					KEELSON		12/16/2003	6870	6871	MHO220008	MHO220009	D/S	4	SPO220004	8	VCP			185	135			0	0	0.00			0	0	0.00									
3	6_No_Defect	2205			GGSD		6	130					KEELSON		12/16/2003	6871	7310	MHO220009	MHO220010	D/S	182	SPO220030	8	VCP			223	349			0	0	0.00			0	0	0.00									
3	6_No_Defect	2206	

Appendix D-3

Phase	Priority	Ranking	Repair Completion Date	2018_Project	Contractor	Tape No.	DVD No.	Inspection No.	Reversal Tape No.	Reversal DVD No.	Reversal Inspec. No.	DVD Watched? (Y)	Location	Street Name	CCTV Date	Existing MH ID Start	Existing MH ID End	Previous MH ID Start	Previous MH ID End	Direction of Camera	Pipe Existing Sewer ID	Pipe Previous Sewer ID	Pipe Size (in)	Pipe Material	Pipe Joint Length (ft)	Pipe GIS Comment	Length (ft)	CCTV Length (ft)	Structural Defect Coding	PACP Quick Struct Rating	Total Structural Defects	Total Structural Defect Score	Structural Defect Index	Operational and Maintenance	PACP Quick Maint Rating	Total O&M Defects	Total O&M Defect Score	O&M Defect Index	Construction Features	Miscellaneous	Total Construction Features	Reasons for Survey Aborted	GIS Identified Abandoned	Repair Description	Comments	Recommendations
3	6_No_Defect	2211			GGSD		3	89						BALLAST	11/20/2003	7223	7222	MHO230006	MHO230005	U/S	12	SPO230005	8	VCP			222	245			0	0	0.00			0	0	0.00								MHO230005 corrected to MHO230006	
3	6_No_Defect	2212			GGSD		3	89						BALLAST	11/20/2003	7224	7223	MHO230007	MHO230006	U/S	13	SPO230006	8	VCP			387	290			0	0	0.00			0	0	0.00									
3	6_No_Defect	2213			GGSD		3	90						BALLAST	11/20/2003	7319	7224	MHO230008	MHO230007	U/S	186	SPO230031	8	VCP			416	348			0	0	0.00			0	0	0.00								MHO230004 corrected to MHO230005	
3	6_No_Defect	2214			GGSD		19	397						WARD	5/13/2004	7320	6792	MHO230009	MHO230031	U/S	57	SPO230003	8	VCP			92	99			0	0	0.00			0	0	0.00									
3	6_No_Defect	2215			GGSD		19	397						WARD	5/13/2004	7320	7321	MHO230010	MHO230009	D/S	162	SPO230021	8	VCP			80	111			0	0	0.00			0	0	0.00									
3	6_No_Defect	2216			GGSD		19	398					Y	WARD	5/13/2004	7321	6878	MHO230010	MHO230011	D/S	163	SPO230022	8	VCP			384	349			0	0	0.00			0	0	0.00									
3	6_No_Defect	2217			GGSD		19	398					Y	WARD	5/13/2004	6878	6879	MHO230011	MHO230012	D/S	164	SPO230023	8	VCP			330	350			0	0	0.00			0	0	0.00									
3	6_No_Defect	2218			GGSD		4	104						STARBOARD	12/2/2003	7225	7222	MHO230014	MHO230005	D/S	56	SPO230002	8	VCP			260	255			0	0	0.00			0	0	0.00									
3	6_No_Defect	2219			GGSD		5	107						SENNIT	12/4/2003	7225	7226	MHO230014	MHO230015	D/S	14	SPO230007	8	VCP			221	266			0	0	0.00			0	0	0.00									
3	6_No_Defect	2220			GGSD		4	106						SENNIT	12/4/2003	6881	7227	MHO230017	MHO230016	U/S	187	SPO230032	8	VCP			415	487			0	0	0.00			0	0	0.00								Additional MH found	
3	6_No_Defect	2221			GGSD		4	104						STARBOARD	12/2/2003	7228	7225	MHO230018	MHO230014	D/S	55	SPO230001	8	VCP			270	268			0	0	0.00			0	0	0.00									
3	6_No_Defect	2222			GGSD		5	111						BEACON	12/5/2003	7228	7229	MHO230018	MHO230019	D/S	16	SPO230009	8	VCP			204	183			0	0	0.00			0	0	0.00									
3	6_No_Defect	2223			GGSD		5	110						BEACON	12/4/2003	6882	7230	MHO230021	MHO230020	U/S	188	SPO230033	8	VCP			414	348			0	0	0.00			0	0	0.00								MHO230021 to MHO230020 GIS Length is 413.6'. Not Clear, MHO230020 is buried MH on Inspection Report. It is not MHO230020	
3	6_No_Defect	2224			GGSD		6	117						KEDGE	12/9/2003	7233	7234	MHO230025	MHO230026	D/S	20	SPO230014	8	VCP			290	408			0	0	0.00			0	0	0.00								Additional MH found	
3	6_No_Defect	2225			GGSD		6	117						KEDGE	12/9/2003	7234	7235	MHO230026	MHO230027	D/S	21	SPO230015	8	VCP			226	149			0	0	0.00			0	0	0.00									
3	6_No_Defect	2226			GGSD		6	116						REEVE	12/9/2003	7236	7237	MHO230028	MHO230029	D/S	23	SPO230017	8	VCP			250	271			0	0	0.00			0	0	0.00								MHO230016 corrected to MHO230029	
3	6_No_Defect	2227			GGSD		5	114						SPAR	12/5/2003	6883	6882	MHO230030	MHO230021	U/S	168	SPO230027	8	VCP			260	235			0	0	0.00			0	0	0.00									
3	6_No_Defect	2228			PPT		12	6						STANRICH	5/21/2007	11794	11793	MHP130040	MHP130039	U/S	4798	SPP130036	8	VCP			160	146			0	0	0.00			0	0	0.00									
3	6_No_Defect	2229			PPT		12	5						STANRICH	5/21/2007	11795	11794	MHP130041	MHP130040	U/S	4799	SPP130037	8	VCP			105	106			0	0	0.00			0	0	0.00								Pipe SPP1130037 corrected to SPP130037	
3	6_No_Defect	2230			PPT		12	7						STANRICH	5/21/2007	11797	11796	MHP130043	MHP130042	U/S	4894	SPP130039	8	VCP			175	186			0	0	0.00			0	0	0.00									
3	6_No_Defect	2231			PPT		12	1						DOROTHY	5/21/2007	11798	11795	MHP130044	MHP130041	U/S	4800	SPP130038	8	VCP			370	374			0	0	0.00			0	0	0.00									
3	6_No_Defect	2232			PPT		12	4						DOROTHY	5/21/2007	11798	11797	MHP130044	MHP130043	U/S	4895	SPP130040	8	VCP			320	320			0	0	0.00			0	0	0.00									
3	6_No_Defect	2233			PPT		12	2						DOROTHY	5/21/2007	11798	11799	MHP130044	MHP130045	D/S	4896	SPP130041	8	VCP			100	97			0	0	0.00			0	0	0.00									
3	6_No_Defect	2234			PPT		12	3						DOROTHY	5/21/2007	11799	11800	MHP130045	MHP140030	D/S	4897	SPP140023	8	VCP			120	97			0	0	0.00			0	0	0.00									
3	6_No_Defect	2235			PPT		12	32						EUCLID	5/23/2007	11802	11801	MHP140032	MHP140031	U/S	4899	SPP140025	8	VCP			310	315			0	0	0.00			0	0	0.00	1								
3	6_No_Defect	2236			PPT		11	47						LYNNE	5/21/2007	11806	11807	MHP140033	MHP140034	D/S	4904	SPP140027	6	VCP			205	211			0	0	0.00			0	0	0.00									
3	6_No_Defect	2237			PPT		11	48						LYNNE	5/21/2007	11807	11808	MHP140034	MHP140035	D/S	4905	SPP140028	8	VCP			265	271			0	0	0.00			0	0	0.00									
3	6_No_Defect	2238			PPT		11	36						LYNNE	5/17/2007	11809	11812	MHP140036	MHP140039	D/S	4907	SPP140030	8	VCP			285	301			0	0	0.00			0	0	0.00									
3	6_No_Defect	2239			PPT		12	8						MITCHELL	5/21/2007	11810	11811	MHP140037	MHP140038	D/S	4908	SPP140031	6	VCP			180	192			0	0	0.00			0	0	0.00									
3	6_No_Defect	2240			PPT		12	9						MITCHELL	5/21/2007	11811	11812	MHP140038	MHP140039	D/S	4909	SPP140032	8	VCP			300	302			0	0	0.00			0	0	0.00									
3	6_No_Defect	2241			PPT		12	13						DOROTHY	5/21/2007	11818	11800	MHP140043	MHP140030	U/S	4898	SPP140024	8	VCP			150	164			0	0	0.00			0	0	0.00									
3	6_No_Defect	2242			PPT		12	11						DOROTHY	5/21/2007	11818	11819	MHP140043	MHP140044	D/S	5290	SPP140037	8	VCP			160	154			0	0	0.00			0	0	0.00									
3	6_No_Defect	2243			PPT		11	46						DOROTHY	5/21/2007	11820	12294	MHP140045	MHO140019	D/S	4428	SPO140031	8	VCP			360	363			0	0	0.00			0	0	0.00				1					
3	6_No_Defect	2244			PPT		13	22						JOLA	5/31/2007	11924	11925	MHP150012	MHP150013	D/S	4828	SPP150012	8	VCP			335	322			0	0	0.00			0	0	0.00									
3	6_No_Defect	2245			PPT		12	43						LIBBY	5/25/2007	11926	11925	MHP150014	MHP150013	U/S	4829	SPP150013	8	VCP			275	268			0	0	0.00			0	0	0.00									
3	6_No_Defect	2246			PPT		12	42						LIBBY	5/25/2007	11927	11926	MHP150015	MHP150014	U/S	4830	SPP150014	8	VCP			250	264			0	0	0.00			0	0	0.00									
3	6_No_Defect	2247			PPT		12	41						WOODBURY	5/25/2007	11927	11495	MHP150015	MHQ150022	U/S	5424	SPP150030	8	VCP			290	286			0	0	0.00			0	0	0.00									
3	6_No_Defect	2248			PPT		12	39						WOODBURY	5/25/2007	11929	11427	MHP150017	COP150002	U/S	5301	SPP150015	8	VCP			130	120			0	0	0.00			0	0	0.00									
3	6_No_Defect	2249			PPT		12	40						BARNETT	5/25/2007	11929	11928	MHP150017	MHP150016	U/S	5302	SPP150016	8	VCP			350	351			0	0	0.00			0	0	0.00									
3	6_No_Defect	2250			PPT		12	37						WOODBURY	5/25/2007	11929	11930	MHP150017	MHP150018	D/S	5303	SPP150017	8	VCP			220	218			0	0	0.00			0	0	0.00									
3	6_No_Defect	2251			PPT		10	42						WOODBURY	5/14/2007	11000	10953	MHP150018	MHO150050	U/S	4013	SPP150047	8	VCP			267	253			0	0	0.00			0	0	0.00									
3	6_No_Defect	2252			PPT		12	38						WOODBURY	5/25/2007	11930	11931	MHP150018	MHP150032	D/S	5304	SPP150018	8	VCP			285	281			0	0	0.00			0	0	0.00	1								
3	6_No_Defect	2253			PPT		13	24						HAVENWOOD	5/31/2007	11934	11932	MHP150022	MHP150020	U/S	5306	SPP150020	8	VCP			195	203			0	0	0.00			0	0	0.00	2								
3	6_No_Defect	2254			PPT		13	23						WENTWORTH	5/31/2007	11934	11933	MHP150022	MHP150021	U/S	5307	SPP150021	8	VCP			175	180			0	0	0.00			0	0	0.00	2								
3	6_No_Defect	2255			PPT		14	39						HAVENWOOD	6/5/2007	11936	11935	MHP150024	MHP150023	U/S	5456	SPP150023	10	VCP			320	338			0	0	0.00			0	0	0.00									
3	6_No_Defect	2256			PPT		15	1						WENTWORTH	6/5/2007	11938	11937	MHP150026	MHP150025	U/S	5309	SPP150025	8	VCP			215	201			0	0	0.00			0	0	0.00	1								
3	6_No_Defect	2257			PPT		15	26						WOODBURY	6/11/2007	11970	11430	MHP150030	COP150001	U/S	3852	SPP150055	8	VCP			90	89			0	0	0.00			0	0	0.00									
3	6_No_Defect	2258			PPT		15	24						WOODBURY EASEMENT	6/11/2007	11970	11969	MHP150030	MHP150029	U/S	5283	SPP150054	6	VCP			240	248			0	0	0.00			0	0	0.00	1								
3	6_No_Defect	2259			PPT		17	17						HAVENWOOD EASEMENT	6/16/2007	11941	11942	MHP150032	MHP160001	D/S	5459	SPP150029	12	VCP			150	147			0	0	0.00			0	0	0.00		1							
3	6_No_Defect	2260			PPT		12	26						TRASK	5/22/2007	11804	11803	MHP150034	MHP150033	U/S	4901	SPP150031	8	VCP			260	287			0	0	0.00			0	0	0.00		1							
3	6_No_Defect	2261			PPT		12	24						TRASK	5/22/2007	11813	11805	MHP150035	MHP150037	U/S	4903	SPP150033	8	VCP			130	134			0	0	0.00			0	0	0.00									
3	6_No_Defect	2262			PPT		12	22						TRASK	5/22/2007	11815	12291	MHP150036	MHO150007	D/S	4334	SPO150017	8	VCP			320	321			0	0	0.00			0	0	0.00				2					
3	6_No_Defect	2263			PPT		12	4						ELIZABETH	5/22/2007	11815	11814	MHP150036	MHP140040	U/S	5287	SPP140034	8	VCP			220	220			0	0	0.00			0	0	0.00								Pipe SPP150031 corrected to SPP140034	
3	6_No_Defect	2264			PPT		12	23						TRASK	5/22/2007	11815	11813	MHP150036	MHP150035	U/S	5286	SPP150034	8	VCP			330	322			0	0	0.00			0	0	0.00									
3	6_No_Defect	2265			PPT		12	25						TRASK	5/22/2007	11805	11804	MHP150037	MHP150034	U/S	4902	SPP150032	8	VCP			200	196			0	0	0.00			0	0	0.00		1							
3	6_No_Defect	2266			PPT		11	28						ALLEY W/O EUCLID	5/16/2007	10943	10942	MHP150040	MHP150039	U/S	4002	SPP150036	8	VCP			320	337			0	0	0.00			0	0	0.00	1								
3	6_No_Defect	2267			PPT		10	45						WOODBURY	5/14/2007	10946	10943	MHP150043	MHP150040	U/S	4003	SPP150037	8	VCP			150	150			0	0	0.00			0	0	0.00	1								
3	6_No_Defect	2268			PPT		11	17						FERNWOOD	5/15/2007	10948	10947	MHP150045	MHP150044	U/S	4007	SPP150041	8	VCP			180	172			0	0	0.00			0	0	0.00									
3	6_No_Defect	2269			PPT		11	16						FERNWOOD	5/15/2007	10949	10950	MHP150046	MHP150047	D/S	4009	SPP150043	8	VCP			275	276			0	0	0.00			0	0	0.00									
3	6_No_Defect	2270			PPT		10	44						WOODBURY	5/14/2007	10950	10946	MHP150047	MHP150043	U/S	4006	SPP150040	8	VCP			240	240			0	0	0.00			0	0	0.00	1								
3	6_No_Defect	2271			PPT		10	41						WOODBURY	5/14/2007	10950	10953	MHP150047	MHP150050	D/S	4010	SPP150044	8	VCP			265	269			0	0	0.00			0	0	0.00	1								
3	6_No_Defect	2272			PPT		10	47						LOMBARDY	5/14/2007	10952	10951	MHP150049	MHP150048	U/S	4011	SPP150045	8	VCP			140	130			0	0	0.00			0	0	0.00	1								
3	6_No_Defect	2273			PPT		10	46						LOMBARDY	5/14/2007	10953	10952	MHP150050	MHP150049	U/S	4012	SPP150046	8	VCP			330	333			0	0	0.00			0	0	0.00	1								
3	6_No_Defect	2274			PPT		10	51						MILLS	5/14/2007	10955	10954	MHP150052	MHP150051	U/S	4014	SPP150048	8	VCP			40	36			0	0	0.00			0	0	0.00									
3	6_No_Defect	2275			PPT		10	52						GAINES	5/14/2007	10956	10998	MHP150053	MHO150016	U/S	4016	SPP150050	8	VCP			220	221			0	0	0.00			0	0	0.00	1	1							
3	6_No_Defect	2276			PPT		14	34						ANITA	6/5/2007	11943	11942	MHP160002	MHP160001	U/S	5460	SPP160002	12	VCP			15	22			0	0	0.00			0	0	0.00									
3	6_No_Defect	2277			PPT		14	30						ROSITA	6/4/2007	11945	11429	MHP160003	COP160001	U/S	5313	SPP160004	8	VCP			60	50			0	0	0.00			0	0	0.00		1							
3	6_No_Defect	2278			PPT		14	28						ROSITA	6/4/2007	11945	11946	MHP160003	MHP160004	D/S	5314	SPP160005	8	VCP			40	50			0	0	0.00			0	0	0.00		1							
3	6_No_Defect	2279			PPT		14	29						ROSITA	6/4/2007	11946	11947	MHP160004	MHP160005	D/S	5315	SPP160006	8	VCP			335	339			0	0	0.00			0	0	0.00	1	1							
3	6_No_Defect	2280			PPT		14	12						LA BONITA	6/1/2007	11949	11950	MHP160006	MHP160007	D/S	5318	SPP160008	8	VCP			285	288			0	0	0.00			0	0	0.00		1							
3	6_No_Defect	2281			PPT		14	13						LA BONITA	6/1/2007	11950	11951	MHP160007	MHP170003	D/S	5319	SPP160009	8	VCP			270	287			0	0	0.00			0	0	0.00									
3	6_No_Defect	2282			PPT		15	2						ANABEL	6/9/2007	11952	11953	MHP160008	MHP160009	D/S	5321	SPP160010	8	VCP			220	222			0	0	0.00			0	0	0.00		1							
3	6_No_Defect	2283			PPT		15	3						ANABEL	6/9/2007	11953	11954	MHP160009	MHP160010	D/S	5322	SPP160011	8	VCP			220	224			0	0	0.00			0	0	0.00									
3	6_No_Defect	2284			PPT		14	8						LA BONITA	6/1/2007	11954	11956	MHP160010	MHP160012	D/S	5323	SPP160012	8	VCP			330	334			0	0	0.00			0	0	0.00		3							
3	6_No_Defect	2285			PPT		14	10						CYNTHIA	6/1/2007	11955	11956	MHP160011	MHP160012	D/S	5324	SPP160013	8	VCP			215	263			0	0	0.00			0	0	0.00									
3	6_No_Defect	2286			PPT		14	9						LA BONITA	6/1/2007	11956	11957	MHP160012	MHP160013	D/S	5325	SPP160014	8	VCP			170	171			0	0	0.00			0	0	0.00		1							
3	6_No_Defect	2287			PPT		14	11						SAN JUAN	6/1/2007	11957	11963	MHP160013	MHP160021	D/S	5326	SPP160015	8	VCP			325	339			0	0	0.00			0	0	0.00									
3	6_No_Defect	2288			PPT		14	16						CYNTHIA CIR	6/1/2007	11972	11971	MHP160016	MHP160015	U/S	3853	SPP160041	8	VCP			345	346			0	0	0.00			0	0	0.00									
3	6_No_Defect	2289			PPT		14	14						CYNTHIA CIR	6/1/2007	11972	11959	MHP160016	MHP160017	D/S	3855	SPP160042	8	VCP			275	278			0	0	0.00			0	0	0.00	1								
3	6_No_Defect	2290			PPT		14	15						CYNTHIA CIR	6/1/2007	11959	11960	MHP160017	MHP160018	D/S	5327	SPP160017	8	VCP			185	201			0	0	0.00			0	0	0.00		1							
3	6_No_Defect	2291			PPT		14	32						ANITA	6/5/2007	11963	11961	MHP160021	MHP160018	U/S	5464	SPP160019	12	VCP			110	261			0	0	0.00			0	0	0.00		2							
3	6_No_Defect	2292			PPT		14	35						ANITA	6/5/2007	11963	11965	MHP160021	MHP160023	D/S	5465	SPP160021	12	VCP			215	222			0	0	0.00			0	0	0.00									
3	6_No_Defect	2293			PPT		14	40						MILLS	5/14/2007	11002	11001	MHP160023	MHO160022	U/S	6000	SPO160001	8	VCP			163	165			0	0	0.00			0	0	0.00									
3	6_No_Defect	2294			PPT		52	20						ANITA EASEMENT	12/27/2007	11965	11964	MHP160023	MHP160022	U/S	5422	SPP160022	8	VCP			50	47			0	0	0.00			0	0	0.00									
3	6_No_Defect	2295			PPT		14	36						ANITA	6/5/2007	11965	11966	MHP160023	MHP170004	D/S	5466	SPP160023	12	VCP			405	408			0	0	0.00			0	0	0.00		2							
3	6_No_Defect	2296			PPT		10	24						BLAKE	5/11/2007	10958	10957	MHP160025	MHP160024	U/S	5953	SPP160025	8	VCP			215	218			0	0	0.00			0	0	0.00									
3	6_No_Defect	2297			PPT		10	22						BLAKE	5/11/2007	10959	10981	MHP160026	MHO160021	U/S	4619	SPO160023	8	VCP			350	352			0	0	0.00			0	0	0.00									
3	6_No_Defect	2298			PPT		10	21						BLAKE	5/11/2007	10960	10959	MHP160027	MHP160026	U/S	5955	SPP160027	8	VCP			350	352			0	0	0.00			0	0	0.00									
3	6_No_Defect	2299			PPT		12	36						MANSOR	5/25/2007	10962	10961	MHP160029	MHP160028	U/S	5988	SPP160029	8	VCP			227	227			0	0	0.00			0	0	0.00									
3	6_No_Defect	2300			PPT		10	20						FERNWOOD	5/11/2007	10962	10970	MHP160029	MHP160037	D/S	5989	SPP160030	8	VCP			149	149			0	0	0.00			0	0	0.00									
3	6_No_Defect	2301			PPT		10	35						FERNWOOD	5/14/2007	10965	10963	MHP160032	MHP160030	U/S	5990	SPP160031	8	VCP			145	141			0	0	0.00			0	0	0.00									
3	6_No_Defect	2302			PPT		12	31						RANNEY	5/22/2007	10965	10964	MHP160032	MHP160031	U/S	5991	SPP160032	8	VCP			227	226			0	0	0.00			0	0	0.00									
3	6_No_Defect	2303			PPT		10	25						ALLEY W/O EUCLID	5/11/2007	10968	10967	MHP160035	MHP160034	U/S	5994	SPP160035	8	VCP			325	326			0	0	0.00			0	0	0.00	1								
3	6_No_Defect	2304			PPT		10	34						FERNWOOD	5/14/2007	10969	10965	MHP160036	MHP160032	U/S	5992	SPP160033	8	VCP			243	246			0	0	0.00			0	0	0.00									
3	6_No_Defect	2305			PPT		10	33						FERNWOOD	5/14/2007	10970	10969	MHP160037	MHP160036	U/S	5996	SPP160037	8	VCP			94	94			0	0	0.00			0	0	0.00									
3	6_No_Defect	2306			PPT		10	36						LINNELL AVE	5/14/2007	10970	10972	MHP160037	MHP160039	D/S	5997	SPP160038	8	VCP			275	268			0	0	0.00			0	0	0.00									
3	6_No_Defect	2307			PPT		12	30						LOMBARDY	5/22/2007	10972	10971	MHP160039	MHP160038	U/S	5998	SPP160039	8	VCP			163	166			0	0	0.00			0	0	0.00									
3	6_No_Defect	2308			PPT		15	18						WESTMINSTER	6/11/2007	11944	11948	MHP170001	MHP170002	D/S	5312	SPP170003	10	VCP			275	267			0	0	0.00			0	0	0.00									
3	6_No_Defect	2309			PPT		15	21						WEST

Appendix D-3

| Phase | Priority | Ranking | Repair Completion Date | 2018_Project | General | | | | | | | | | | | | Pipe | | | | | | Structural Defect Coding | | | | | | | | | | | |

Appendix D-3

| Phase | Priority | Rainking | Repair Completion Date | 2018_Project | General | | | | | | | | | | | | | | Pipe | | | | | | | Structural Defect Coding | | | | | | | | | | | | | |

| Phase | Priority | Ranking | Repair Completion Date | 2018_Project | General: Contractor | Tape No. | DVD No. | Inspection No. | Reversal Tape No. | Reversal DVD No. | Reversal Inspec. No. | DVD Watched? (Y) | Location: Street Name | CCTV Date | Existing MH ID: Start | Existing MH ID: End | Previous MH ID: Start | Previous MH ID: End | Direction of Camera | Pipe: Existing Sewer ID | Pipe: Previous Sewer I.D. | Pipe: Size (in) | Pipe: Material | Pipe: Joint Length (ft) | GIS Comment | Length (ft) | CCTV Length (ft) | Structural Defect Coding: Crack C | Fracture F | Broken B | Hole H | Joint J | Deformed D | Collapsed Pipe X | Surface Damage S | Lining Failure LF | Point Repair RP | Sags WL | PACP Quick Struct Rating | Total Structural Defects | Total Structural Defect Score | Structural Defect Index | Operational and Maintenance: Deposits D | Roots (R) | Fine (F) | Tap (T) | Medium (M) | Ball (B) | Infiltration I | Obstacles OB | Vermin V | PACP Quick Maint Rating | Total O&M Defects | Total O&M Defect Score | O&M Defect Index | Construction Features: Tap (Lateral) T | Line L | Intruding Seal Material IS | Miscellaneous M | Total Construction Feature | Reasons for Survey Aband | GIS Identified Abandoned | Repair Description | Comments | Recommendations |
|---|---|---

| Phase | Priority | Ranking | Repair Completion Date | 2018_Project | Contractor | Tape No. | DVD No. | Inspection No. | Reversal Tape No. | Reversal DVD No. | Reversal Inspec. No. | DVD Watched? (Y) | Location | Street Name | CCTV Date | Existing MH ID Start | Existing MH ID End | Previous MH ID Start | Previous MH ID End | Direction of Camera | Existing Sewer ID | Previous Sewer ID | Size (in) | Material | Joint Length (ft) | GIS Comment | Length (ft) | CCTV Length (ft) | Crack C L | Crack C C | Crack C M | Crack C S | Crack C H | Fracture F L | Fracture F C | Fracture F M | Fracture F S | Fracture F H | Broken B SV | Hole H VV | Hole H SV | Joint O VV | Joint J S | Joint J M | Joint J L | Joint J S | Joint J M | Joint J L | Joint J A | Joint J V | Deformed D | Collapsed Pipe X | Collapsed Pipe H | Collapsed Pipe P | Surface Damage S | Lining Failure LF | Point Repair RP | Sags S | Sags WL | PACP Quick Struct Rating | Total Structural Defects | Total Structural Defect Score | Structural Defect Index | Deposits AGS | Deposits AE B | Deposits AE % | Deposits AE L | Deposits AE % | Deposits Other Z | Deposits Other % | Roots (R) Fine (F) B | Roots (R) Fine (F) L | Roots (R) Fine (F) J | Roots (R) Tap (T) C | Roots (R) Tap (T) B | Roots (R) Tap (T) L | Roots (R) Tap (T) J | Roots (R) Medium (M) C | Roots (R) Medium (M) B | Roots (R) Medium (M) L | Roots (R) Medium (M) J | Roots (R) Ball (B) C | Roots (R) Ball (B) B | Roots (R) Ball (B) L | Roots (R) Ball (B) J | Roots (R) Ball (B) C | Infiltration I C | Infiltration I G | Infiltration I D | Infiltration I R | Infiltration I W | Obstacles OB C | Obstacles OB Z | Obstacles Other % | Vermin V C | Vermin V R | PACP Quick Maint Rating | Total O&M Defects | Total O&M Defect Score | O&M Defect Index | Tap (Lateral) T FD | Tap (Lateral) T FL | Tap (Lateral) T BI | Tap (Lateral) T BD | Line L D | Line L L | Line L U | Line L R | Intruding Seal Material IS LD | Intruding Seal Material IS RD | Intruding Seal Material IS SRH | Intruding Seal Material IS SRB | Intruding Seal Material IS SRL | Intruding Seal Material IS Z | Miscellaneous M SA | Miscellaneous M CU | Miscellaneous M MC | Total Construction Feature | Reasons for Survey Aborted | GIS Identified Abandoned | Repair Description | Comments | Recommendations |
|---|---|---

Appendix D-3

| Phase | Priority | Ranking | Repair Completion Date | 2018_Project | Contractor | Tape No. | DVD No. | Inspection No. | Reversal Tape No. | Reversal DVD No. | Reversal Inspec. No. | DVD Watched?(Y) | Location Street Name | CCTV Date | Existing MH ID Start | Existing MH ID End | Previous MH ID Start | Previous MH ID End | Direction of Camera | Pipe Existing Sewer ID | Pipe Previous Sewer I.D. | Pipe Size (in) | Pipe Material | Pipe Joint Length (ft) | Pipe GIS Comment | Length (ft) | CCTV Length (ft) | Structural Defect Coding Crack C L | C | M | S | H | Fracture F L | C | M | S | H | Broken B SV | Hole H VV | SV | VV | Joint O S | M | L | J S M | L | A | Deformed D | V | H | Collapsed Pipe X P | Surface Damage S | Lining Failure LF | Point Repair RP | Sags WL | S | PACP Quick Struct Rating | Total Structural Defects | Total Structural Defect Score | Structural Defect Index | Operational and Maintenance Deposits D AGS | AE B | AE % | AE L | Other % | Other Z | Other % | Roots (R) Fine (F) B | L | J | Tap (T) C | B | L | J | Medium (M) C | B | L | J | Ball (B) C | B | L | J | Infiltration I C | G | D | R | W | Obstacles OB C | Other Z | % | Vermin V C | R | PACP Quick Maint Rating | Total O&M Defects | Total O&M Defect Score | O&M Defect Index | Construction Features T (Lateral) FD | FL | BI | BD | D | Line L | U | R | LD | RD | Intruding Seal Material IS SRH | SRB | SRL | Z | M SA | CU | MC | Miscellaneous | Total Construction Feature | Reasons for Survey Aband. | GIS Identified Abandoned | Repair Description | Comments | Recommendations |
|---|---|---

Appendix D-3

| Phase | Priority | Ranking | Repair Completion Date | 2018_Project | Contractor | Tape No. | DVD No. | Inspection No. | Reversal Tape No. | Reversal DVD No. | Reversal Inspec. No. | DVD Watched? (Y) | Location Street Name | CCTV Date | Existing MH ID Start | Existing MH ID End | Previous MH ID Start | Previous MH ID End | Direction of Camera | Pipe Existing Sewer ID | Pipe Previous Sewer I.D. | Pipe Size (in) | Pipe Material | Pipe Joint Length (ft) | Pipe GIS Comment | Length (ft) | CCTV Length (ft) | Structural Defect Coding: Crack C (L C M S H) | Crack F (L C M S H) | Broken B (SV VV) | Hole H (SV VV) | Joint O (S M L) | Joint S (S M L) | Joint J (S M L) | Deformed D | Collapsed Pipe X | Surface Damage S | Lining Failure LF | Point Repair RP | Sags WL | PACP Quick Struct Rating | Total Structural Defects | Total Structural Defect Score | Structural Defect Index | Operational and Maintenance: Deposits AGS | Deposits AE B | Deposits AE % | Deposits AE L | Deposits AE % | Deposits Other Z | Deposits Other % | Roots (R) Fine (F) B | Roots (R) Fine (F) L | Roots (R) Fine (F) J | Roots (R) Tap (T) C | Roots (R) Tap (T) B | Roots (R) Tap (T) L | Roots (R) Tap (T) J | Roots (R) Medium (M) C | Roots (R) Medium (M) B | Roots (R) Medium (M) L | Roots (R) Medium (M) J | Roots (R) Ball (B) C | Roots (R) Ball (B) B | Roots (R) Ball (B) L | Roots (R) Ball (B) J | Infiltration I | Obstacles OB | Obstacles Other C | Obstacles Other Z | Obstacles Other % | Vermin C | Vermin R | PACP Quick Maint Rating | Total O&M Defects | Total O&M Defect Score | O&M Defect Index | Construction Features: Tap (Lateral) T FD | Tap (Lateral) T FL | Tap (Lateral) T BI | Tap (Lateral) T BD | Line L D | Line L L | Line L U | Line L R | Intruding Seal Material IS LD | Intruding Seal Material IS RD | Intruding Seal Material IS SRH | Intruding Seal Material IS SRB | Intruding Seal Material IS SRL | Miscellaneous M Z | Miscellaneous M SA | Miscellaneous M CU | Miscellaneous M MC | Total Construction Feature | Reasons for Survey Aband | GIS Identified Abandoned | Repair Description | Comments | Recommendations |
|---|---|---

| Phase | Priority | Ranking | Repair Completion Date | 2018_Project | General | | | | | | | | | | Pipe | | | | | | | Structural Defect Coding | | | | | | | | | |

Appendix D-4

Condition Assessment Priorities

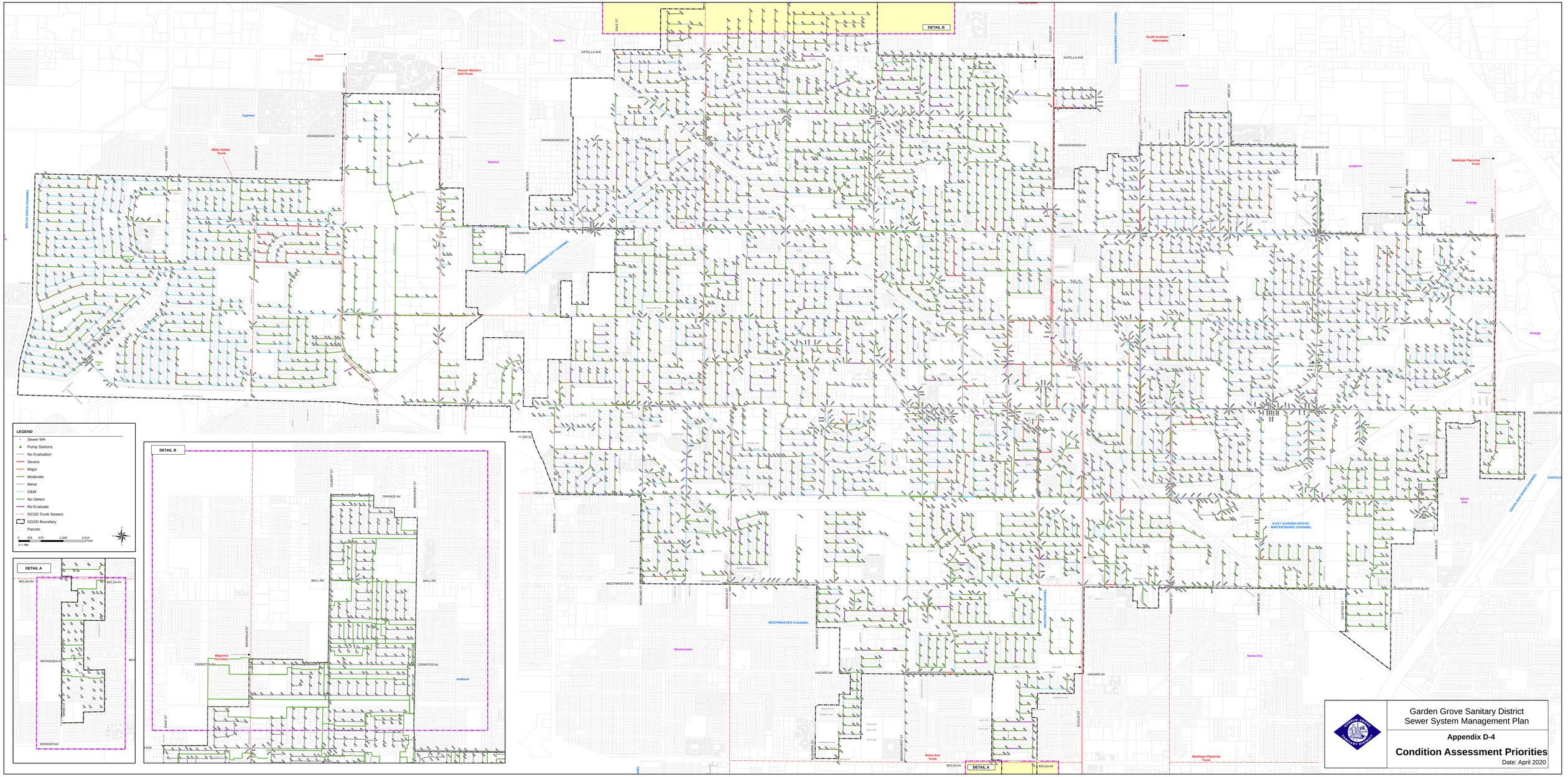

Garden Grove Sanitary District
Sewer System Management Plan

Appendix D-4

Condition Assessment Priorities

Date: April 2020

Appendix D-5

Equipment Inventory

Vehicles
3 – Combination trucks
1 – CCTV van
1 – Utility truck with crane
2 – Flatbed trucks
2 – Utility trucks
1 – 10-Wheeler dump truck
1 – Backhoe trailer
1 – Backhoe
1 – Heavy duty flatbed truck
1 – Heavy duty dump bed truck
1 – Dump trailer
1 – Towable air compressor
1 – Solar arrow board
1 – Solar message board
1 – Trailer mounted bypass pump

Vehicle Equipment
300 Feet of 6-inch dump hose for combination trucks
1 – 20-Foot leader hoses
1 – Tiger tail hose guide
2 – 5-Foot aluminum double flanged suction tubes
1 – 3-Foot aluminum double flanged suction tube
1 – Flex suction hose for combination trucks
9 – Suction tube clamps
1 – Lateral-cleaning hose and reel
2 – Emergency reflective triangles
2 – Fill hoses
5 – Hydrant wrenches
3 - Wash down guns
1 – Come along winch
25 – 30 Minute Flares
3 – Grease Guns
2 – 12 Foot Clams
1 – 8 Foot Clams

Sewer Maintenance Equipment
1 – SRECO CCTV push camera, monitor, and locator
1 – RIDGID “See Snake” CCTV push camera, monitor, and locator
1 – Envirosight pole camera with tablet
1 – Dell laptop for SCADA use
1 – Panasonic Toughbook laptop
1 – Gas-powered bypass pump
2 – Suction hoses for bypass pump
1 – Honda 2000I gas powered inverter generator
1 – Metal detector
1 – 5 Gallon portable air tank
1 – Roll of neoprene rubber for storm drain mats
1 – Manhole debris scoops
1 – 8-Foot clams
6 – 6-Foot aluminum extension poles for scrapers
1 – EZ Up canopy
Assorted rubber plugs for I/I prevention
1 – Upper manhole roller
1 – Sewer hose swage tool with assorted fittings
6 - Sewer hose traffic ramps
Assorted grit catchers
2– 15-Inch sand traps
4 – J-hook manhole pullers
4 – Chain hook large manhole pullers

Sewer Cleaning Equipment
16 – Standard sanitary nozzles in various shapes
2 – Stone Age Industries Warthog nozzles
1 – Lumberjack nozzle
3 – 3D Cleaning nozzles
1 – Chain knocker
2 – Root cutters
1 – Milling cutter
1 – Bulldog nozzle
3 – Teardrop grease bullet nozzles
2 – Dual radial nozzles
2 – Buzz bomb nozzles
1 – Rotating screw blade spinner nozzle
5 – Sreco Vortex nozzles
2 – Sand and sludge nozzle
2 – Storm aluminum nozzles
1 – Terminator nozzle
1 – Super Blockbuster penetrating nozzle
1 – Dagger nozzle
2 – Nozzles with pulling eye
1 – 4-Inch sewer cleaning ball
1 – 6-Inch porcupine
1 – 8-Inch porcupine
1 – 10-Inch porcupine
1 – 18-Inch proofing tool
Assorted skids in various sizes
Assorted skids, chains, and tools for chain knocker
Assorted skids, blades, and tools for root cutters

Safety Equipment
2 – Traffic safety signs
1 – DBI Sala tripod
2 – Fall prevention winches
2 – Lift winches
8 – Harnesses
2 – Triangle harness spreaders
12 – Hard hats
2 – Fall arrest lanyards
2 – Pass through anchor slings
2 – 15-Minute SCBA
1 – 30-Minute SCBA
3 – 15-Minute air tanks without adapters
2 – Electric blowers
1 – Alegro blower/hose unit
5 – Flexible blower duct hoses
1 – Saddle vent
1 – Manhole barricade
3 – Gas detectors
3 – 20 Foot gas detector extension tubes
1 – 3M respirator
1 – Chainsaw safety helmet
3 – LED rechargeable safety lamps
1 – Air Star lighting system
6 – Stemar Speed Shore hydraulic shoring Jacks
6 – Speed Shore shoring fluid – 8oz. bottles
1 – Speed Shore hydraulic shoring pump
1 – 10 Foot fiberglass step ladder
6 – Folding traffic barricades
20 – Sanitation traffic delineators
Assorted traffic signs

Power Tools

1 – Milwaukee rotary hammer drill
1 – Bosch angle grinder
1 – Ridgid ½-inch drill
1 – Milwaukee cordless sawzall
1 – Chicago Tool Company buffer
1 – Hilti rotary hammer drill
1 – Stihl leaf blower
1 – Milwaukee cordless no-hub coupling drill driver
1 – Mini Weld plastic welder

Construction Crew Equipment and Tools

1 – 60 pound pneumatic jackhammer
1 – 90 pound pneumatic jackhammer
1 – Clay spade pneumatic jackhammer/chipping gun
1 – Backfill tamper (powder-puff)
1 – Wacker soil compactor
2 – Compressor air hoses
1 – 6 to 10 Inch inflatable plug
1 – Tire pumps
1 – Inflation hoses for plugs
2 – 5 Foot extension poles for plugs
1 – Genie Lift heavy duty moving dolly
1 – 48 Inch level
1 – PVC cutters
1 – Ridgid chain pipe cutter
1 – Ridgid offset pipe cutter
1 – Wheelbarrow
1 – Jackhammer attachment for backhoe
1 – Small bucket for backhoe
1 – Transit
2 – Story poles
2 – Tile probes

Flow Monitoring Equipment
3 – Hach Sigma flow meters
8 – Qtrek flowmeters
6 – Telog PT 30 overflow meters
1 – Palm Pilot and cables for communication with Telog meters
1 – Insertion/extraction tool with extension pole
1 – 6-Inch flow meter mounting band
4 – 8-Inch flow meter mounting bands
2 – 10-Inch flow meter mounting bands
2 – 12-Inch flow meter mounting bands
2 – 15-Inch flow meter mounting bands
2 – 18-Inch flow meter mounting bands
2 – Adjustable flow meter mounting bands
Assorted tools, chargers, and adapters for flow monitoring equipment

Sewer Pipe (Stick = 5 Foot Section)
3 Sticks- 4” vitrified clay sewer pipe – bell and spigot
1 Stick – 6” vitrified clay sewer pipe – bell and spigot
10 Sticks – 8” vitrified clay sewer pipe – bell and spigot
Assorted lengths of vitrified clay, ABS, PVC, and ductile iron sewer pipe

Sewer Pipe Fittings
7 – 6” x 4” vitrified clay wye
5 – 4” x 4” vitrified clay wye
6 – 6” x 6” vitrified clay wye
1 – 8” x 4” vitrified clay wye
9 – 8” x 6” vitrified clay wye
3 – 8” x 8” vitrified clay wye
1 – 10” x 4” vitrified clay wye
8 – 4” vitrified clay 1/8 bends
6 – 4” vitrified clay 90
4 – 4” vitrified clay 1/8 bends
2 – 8” vitrified clay 1/8 bends
3 – 4” vitrified clay ¼ bends
3 – 6” vitrified clay 1/4 bends
8 – 4” stopper caps
5 – 8” stopper caps
4 – 6” stopper caps
Assorted ABS fittings

Compression Fittings
2 – 4” saddle wye
8 – 4” clay to 4" clay coupling with metal shield
5 – 4” clay to 4” clay coupling – no shield
3 – 6” clay to 6” clay coupling with metal shield
4 – 6” clay to 6” clay coupling without shield
15 – 8” clay to 8” clay coupling with metal shield
2 – 10” clay to 10” clay coupling with metal shield
1 – 6” plastic/cast iron to 6” clay coupling
2 – 8” plastic/cast iron to 8” clay coupling
3 – 10” plastic/cast iron to 10” clay coupling
9 – 4” cap
3 – 6” cap

Manhole Rings and Covers
92 – 24” x 6” manhole ring and cover
6 – 24” x 4” manhole ring and cover
11 – 6” x 24” storm drain manhole ring and cover
6 – 5” x 24” manhole ring and cover
1 – 36” manhole covers
4 – Cleanout ring and covers
1 – Cleanout covers
1 – 4” concrete grade rings
1 – 6” concrete grade rings
2 – Preformed manhole base, shafting, and cone

Chemicals and Compounds
21 – Golden Bell lift station degreaser – 5 gallon container
19– Golden Bell Tackle degreaser – 5 gallon container
4 – Case of RamNek joint sealant compound
1 – Golden Bell Sewer Clean 350 – 5 gallon container
15 – 1 gallon bottles of Hydroclean Bio Oxidant Solution
36 – 32 oz. Ecoline Gel Bac Plus drain fly repellant
8 – 1 gallon bottle State Chemical Prime Zyme grease pre digester
24 – 32 oz. bottle Ecoline Super Kleen Degreaser

Lift Station Equipment
1 – Spare pump for Tiffany lift station
1 – Spare pump for Belgrave lift station
1 – Spare pump for Partridge lift station
2 – Bypass pump clamps for Tiffany/Belgrave lift stations
1 – Bypass pump clamps for Partridge lift station

Misc. Equipment
1 – KSB single phase pump from Partridge lift station
2 – Submersible trash pumps from Harbor lift station
Pumps, motors, and equipment from renovation of Tiffany and Belgrave lift stations
1 – Ridgid See Snake analog monitor
Pearpoint CCTV equipment from CCTV truck retrofit

Appendix E-1

Design Criteria for Sewer Facilities

GARDEN GROVE SANITARY DISTRICT

Design Criteria
for
Sewer Facilities

GARDEN GROVE SANITARY DISTRICT
Garden Grove, California

2015

13802 NEWHOPE STREET
GARDEN GROVE, CALIFORNIA 92843
(714) 741-5395

TABLE OF CONTENTS

Section			Page
1	**Standard Requirements**		**1**
2	**Calculations Required**		**1**
3	**Size**		**1**
4	**Minimum and Maximum Slope**		**2**
5	**Design Flow Criteria**		**2**
6	**Standard Location and Alignment**		**3**
7	**Easements**		**3**
8	**Horizontal Curves**		**4**
9	**Stationing Procedure**		**4**
10	**Minimum Depth**		**4**
11	**Sewer Pipe Material**		**4**
12	**Manholes**		**5**
	12.1	Manhole Requirements	5
	12.2	Manhole Type and Size	5
	12.3	Manhole Covers	5
	12.4	Manhole Linings and Coatings	6
	12.5	Manhole Warning Signs	6
13	**Clean-Outs**		**6**
14	**Separation Between Sewer and Water and Recycled Water Lines**		**7**
15	**House Laterals**		**7**
16	**Private Sewer System**		**7**
17	**Sewer Pump Station**		**8**
	17.1	General	8
	17.2	Standards and Codes	9
	17.3	Design Flows and Heads	9
	17.4	Drivers	10
	17.5	Wet Well	10
	17.6	Emergency Storage	11
	17.7	Dry Well	12
	17.8	Standby Equipment	12
	17.9	Pumps	13
	17.10	Valves and Gates	15
	17.11	Magnetic Flow Meters	18
	17.12	Piping and Support System	19
	17.13	Ancillary Equipment	22
	17.14	Electrical Equipment	28

17.15 Instrumentation and Controls 29
17.16 Supervisory Control and Data Acquisition (SCADA) System 32
17.17 Pressure Gauges 33
17.18 Pump Station Facility 33
17.19 Force Mains 34
17.20 Access Roads 34
17.21 Flood Control 34
17.22 Grading and Area Drainage 35
17.23 Soils Report 35
17.24 Surveying 35
17.25 Security 35
17.26 Water Supply System 35
17.27 Landscaping and Irrigation System 35
17.28 Construction 36

18 Inspection and Testing of Gravity Sewers 37
18.01 CCTV Inspection 37
18.02 Gravity Pipe Leakage Tests 37
18.03 Manhole Leakage Tests 37
18.04 Pipe Slope 38

19 Standard Sewer Notes 38

LIST OF STANDARD PLANS

S-100 Manhole Details
S-101 Concrete Base and Joint Details
S-102 Sewer Drop Manhole with Cleanout
S-103 Manhole Frame and Cover (Traffic Loading)
S-104 Manhole Shaft Opening Orientation Plan
S-105 Lateral Cleanout Detail
S-106 P.V.C. Pipe Bedding & Manhole Connection Details
S-107 VCP Pipe Bedding Details
S-108 Concrete Encasement Type A, B & C
S-109 Concrete Slop Anchors
S-110 Steel Casing Pipe
S-111 VCP or PVC Typical Lateral
S-112 Cut in Wye Connection
S-113 PVC Manhole Liner
S-114 P.V.C. T-Lock Liner Details
S-115 P.V.C. Liner with Gas Flap Installation
S-116 Flat Top Manhole

S-117 Typical Grease Interceptor
S-118 Design Criteria for Separation of Water and Sewer Mains

1. STANDARD REQUIREMENTS

The design and construction of all sanitary sewer system facilities to be operated and maintained by the Garden Grove Sanitary District (GGSD or District) shall be in accordance with these Design Criteria, and the latest edition of the following:

- The Garden Grove Sanitary District Standard Plans, latest edition (GGSDSP)
- The City of Garden Grove Public Works Department Standard Plans, latest edition (GGPWSP)
- Standard Specifications for Public Works Construction (Greenbook),
- Garden Grove Sanitary District's Sewer System Management Plan,
- Statewide General Waste Discharge Requirements issued by the State Water Resources Control Board (Order No. 2006-0003)
- Requirements of the jurisdictional agencies where the work shall be performed
- Cal-OSHA requirements

2. CALCULATIONS REQUIRED

Substantiating engineering calculations for design flows; pipe size; pump, motor, generator, wet well size and appurtenant equipment selection; structural design, and bedding/backfill designs shall accompany plan submittals to the District. All calculations shall be sealed and signed by a California registered professional engineer.

Where flow from a new development or redevelopment is added to an existing sewer, and where the new development or redevelopment is in an area of questionable sewer capacity, the existing sewer shall be flow monitored by a qualified company acceptable to GGSD at the owner's cost for a minimum period of two weeks to verify the existing minimum, average, and peak dry weather flows. Two copies of the report shall be submitted to GGSD in the District's required format. The District will determine the adequacy of capacity in all the facilities that will convey the subject flow.

3. SIZE

Gravity Sewers

The minimum size gravity sewer shall be 8-inches in diameter. The Garden Grove Sanitary District may accept 6-inch diameter sewer lines if they must be used to provide adequate velocity. Sewer pipes shall not be constructed in a common trench with another utility. Adequate horizontal and vertical clearance shall be maintained in accordance with the State of California Department of Health Services "Criteria for the Separation of Water Mains and Sanitary Sewers", summarized on GGPWSP B-760, B-761, B-762, and B-763.

Force Mains

The size of sewer force mains shall be determined during the design phase of the project based upon a comparative study of the construction cost and pumping costs for several alternative sizes. In no case shall a force main be less than 4 inches in diameter. The capacity of the force main shall be the design peak flow from the pump station. The minimum design velocity for a force main shall be 3.0 fps, and maximum allowed 5.0 fps.

The discharge shall be into a manhole with a smooth flow transition to a gravity sewer. The force main terminal manhole shall be PVC lined.

All force mains shall have a tape attached to the pipe, identifying it as a sewer pipe.

4. MINIMUM AND MAXIMUM SLOPE

All sewers shall be designed and constructed to provide a mean velocity of not less than two (2) feet per second (fps) when flowing at the estimated average dry weather flow as calculated using Manning's formula with an "n" value of 0.013. Subject to the velocity limitations contained in this subsection, the slope shall be the maximum possible. Drop manholes shall not be used to reduce slopes to the minimum allowed.

The maximum allowable slope shall be the slope which generates a maximum flow velocity of 6 fps at the peak dry weather flow rate in vitrified clay pipe (VCP), and 5 fps in polyvinyl chloride pipe (PVC) as calculated using Manning's equation with an "n" value of 0.013.

The minimum slope on 6-inch sewer shall be 1% where the tributary area consists of less than 20 dwelling units (d.u.) or its flow equivalent.

Sewer pipes shall have a constant slope between the upstream and downstream manhole of each reach. Any reach of sewer containing sags of any amount shall be removed and reconstructed at the design slope at no cost to the Garden Grove Sanitary District. The total cost of inspection, administration, and retesting of improperly installed sewers shall be borne by the contractor. The Garden Grove Sanitary District shall not accept any sewer that does not meet these requirements. There shall be no exception to the proper slope requirement.

5. DESIGN FLOW CRITERIA

The average dry weather flow (Q_{adw}) rates for sewers shall be calculated using the unit flow factors contained in Table 1 and the tributary land uses. Where appropriate, and when required by the Garden Grove Sanitary District, the unit flow factors shall be evaluated by the design engineer based upon the specific land uses and densities proposed for new development or redevelopment.

Table 1
Unit Flow Factors

Land Use Designation	Land Uses	Unit Flow Factor	Units
R-1	Low Density Residential	1,450	GPD/AC
R-2	Medium Density Residential	2,750	GPD/AC
R-3	High Density Residential	3,000	GPD/AC
C-1	Neighborhood Commercial	1,500	GPD/AC
C-2	Community Commercial	1,500	GPD/AC
M-1	Light Industrial	2,000	GPD/AC
O-P	Office/Professional	1,500	GPD/AC
O-S	Open Space	10	GPD/AC
PUD	Planned Unit Development	1,000	GPD/AC
BCSP, CCSP, HCSP	Specific Plans	1,000	GPD/AC

The peak dry weather flow (Q_{pdw}) in cubic feet per second (cfs) shall be determined from Q_{adw} in cfs based upon the following equation:

$$Q_{pdw}=a\ Q_{adw}^{\ b}$$

Coefficients a and b shall be based upon a minimum of two weeks of flow monitoring where the tributary flow from a new development or redevelopment is added to an existing sewer. Where such information is not available, the following equation shall be used to determine the peak dry weather flow:

$$Q_{pdw}=2.0\ Q_{adw}^{\ 0.92}$$

The determination of the peak dry weather flow shall also consider other factors such as pumped flows and large sewer flow generators.

The peak wet weather flow (Q_{pww}) shall be based upon recorded historical information where available and applicable. Otherwise, the peak wet weather flow shall be calculated utilizing the following formula:

$$Q_{pww}=1.4\ Q_{pdw}$$

The peak dry weather flow rate in pipes 15-inches and smaller will be limited by the calculated depth to pipe diameter ratio of d/D = 0.5; and 18-inches and larger d/D = 0.62.

The pipe shall flow at a calculated depth to pipe diameter ratio of no more than 0.80 with the peak wet weather flow.

6. STANDARD LOCATION AND ALIGNMENT

In local residential and industrial streets, sewer pipes shall be located six (6) feet from the centerline of the street in the center of the driving lane. In major, primary, and secondary highways, the sewer pipes shall be located in the center of the driving lane nearest to the center of the street, but will **not** be located in the median strip or parking lanes. Any deviation from the standard location and alignment shall only be done with prior written approval of GGSD.

All-weather access roads capable of accommodating all required construction and maintenance equipment shall be provided for all sewers not located within a paved street.

In curved streets, gravity sewer mains shall be constructed in straight reaches between manholes. In no case shall the outside of the sewer main be closer than four feet to the closest curb face.

A maximum horizontal separation between sewer and domestic water mains shall be achieved by aligning the sewer on the opposite side of the street centerline from the domestic water main.

7. EASEMENTS

Permanent easements, where absolutely necessary, shall be a minimum of 30 feet in width and shall be shown on the plans. Temporary easements for construction only shall be shown on the plans including date of termination.

Where applicable, permanent public utility easements shall be recorded on the tract map, and granted to the Garden Grove Sanitary District. When applicable, separate easement documents for both permanent and temporary easements shall be prepared (on standard title company forms) and presented to the Garden Grove Sanitary District for acceptance and recording.

The District will accept sewers on private streets upon granting of a public utility easement to the District.

The District will not accept any easement for sewers if said easement cannot be accessed with a flush truck through its entire length.

Sewer easement shall be located entirely on one lot. Building set backs shall be minimum 20 feet from easement edges.

8. HORIZONTAL CURVES

Gravity sewer mains shall **not** be designed with horizontal curves.

9. STATIONING PROCEDURE

Centerline stations for sewers shall be shown on the plans. Sewer centerline stations shall be independent of street stationing. All manholes shall be numbered and the numbers noted on the plans (example: MH #1). Sewer stations shall start at 10+00.00 at the downstream point of connection and increase upstream to the last manhole on a sewer line. Intersecting sewer lines will be independently stationed from their downstream point of connection and increase upstream to the last manhole. Each line shall be independently labeled for identification as “Sewer Line A”, “Sewer Line B”, etc.

10. MINIMUM DEPTH

Minimum depth of cover from finish street grade to the top of sewer main pipe shall be seven (7) feet unless otherwise approved by the District Engineer.

Unless dictated otherwise by the elevation of an existing mainline sewer, house connections shall be installed so that there is a minimum of six (6) feet of cover from the top of the curb to the top of the pipe at the curb line. At the time of construction, stakes shall be provided for location and grade of each house connection.

11. SEWER PIPE MATERIAL

All gravity sewers shall be either extra strength VCP or SDR-26 PVC. Imperfections **shall not be allowed** in either type of pipe. Sewer service laterals shall be of the same material as the main line sewer-either extra strength VCP or SDR-26 PVC pipe.

All sewer force mains carrying domestic sewage and operating at pressures of less than 40 psi shall be PVC pipe meeting AWWA C-900 Class 200 pipe standards. All other force mains shall be 40 mil ceramic epoxy lined and properly coated ductile iron pipe.

All gravity sewers in industrially zoned areas or major commercial areas shall be extra strength VCP.

12. MANHOLES

12.1 Manhole Requirements

A manhole will be required at:

A. The upstream end of each line, change in grade or size, change in alignment, or intersection of two (2) or more sewers

B. At a lateral when it is the same size as the main line sewer

C. Along the sewer main at maximum distances of 300 feet for 6-inch sewers, 400 feet for 8-inch and larger sewers.

12.2 Manhole Type and Size

Manholes shall be precast reinforced concrete with eccentric cone in accordance with Garden Grove Sanitary District Standard Drawings S-100 through S-104. The summit manholes shall be precast reinforced concrete with concentric cone. Minimum diameter shall be 48 inches and larger sizes shall be required as shown in the following table:

Manhole Sizes

Sewer Main (inches)	Maximum Branch Size (inches)	Manhole Size (inches)	Frame and Cover (inches)
8-15	10	48	24
18-21	12	60	30
24-36	15	72	36

Extra Depth Requirements

Depth of Cover (feet)	Manhole Size (inches)
6 or less	48
6.5-12	48
12.5-16	60
16.5 and greater	72

All manholes shall be provided with at least all-weather vehicular access.

12.3 Manhole Covers

Manhole covers shall be cast iron in accordance with Garden Grove Sanitary District Standard Drawing S-103. The size shall be determined from the table in Section 12.2. Manhole covers shall have one (1) vent hole and one (1) pick hole.

Temporary covers may be necessary in new streets. In these cases, the manhole shaft shall be left six (6) inches, minimum, below subgrade. A heavy metal plate acceptable to the District Engineer shall be provided to cover the manhole opening. Cleats shall be provided in at least four (4) points for the underside of the temporary cover to prevent the temporary cover from moving. These cleats shall extend a minimum of 3 inches from the cover plate and shall be welded to the plate.

Plywood shall be cut to the shape and size of the manhole base and placed in the base before the temporary cover is placed on the shaft. At the completion of final paving, each manhole shall be raised to final grade by the installation of grade rings, as necessary, and the installation of the permanent frame and cover assembly. Plywood shall be removed from the manhole when the permanent frame and cover assembly is installed.

12.4 Manhole Linings and Coatings

The following manholes will be lined with PVC:

A. If the sewer has a slope of 5% or greater, all the manholes on the sewer

B. Where there is a change in slope, from steep to flat, of 3% or greater, the manhole at the grade change and the next manhole upstream

C. All force main terminal manholes

E. As required by the District Engineer

The approved PVC liners are Ameron T-Lock liner and Koroseal Lok-Rib by B. F. Goodrich. Refer to Orange County Sanitation District Standard Drawing S-065 for PVC liner details.

All other manholes shall be lined with Sancon 100 or approved equal.

Outer surfaces of precast and cast-in-place manholes and structures shall be given two coats of bituminous dampproofing applied at a rate in accordance with manufacturer's instructions. In no case shall the total bituminous coating be less than 16 mil dry film thickness.

12.5 Manhole Warning Signs

The entrance to every new manhole shall be fitted with a plastic warning sign, located 12 inches below the top of the manhole frame, with the inscription "CAUTION – VENTILATE BEFORE ENTERING" in letters no smaller than ½-inch in height. The sign shall be attached to the concrete with four Type 316 stainless steel screws and anchors. Signs shall be manufactured by W.H. Brady Company; Seton Nameplate Corporation, or approved equal.

13. CLEAN-OUTS

Use of clean-outs as shown in the Garden Grove Sanitary District Drawing S-105 shall be limited to the following instances unless approved otherwise by the District Engineer.

A. At the upstream end of short sections of sewer, less than 250 feet which will be extended within three months.

B. All sewer laterals at the property owner's side of the property line.

C. Special instances such as on a sewer lateral to a single family residential lot where the dwelling unit is set back more than 100 feet from the property line, where there is a large slope up to the building pad from the property line and a grade change in the

lateral is necessary, or where the sewer lateral enters the rear of the lot from a public right-of-way.

D. On a lateral where the overflow level of the lowest wastewater fixture in the building is below the rim elevation of the uphill sewer manhole on the main line. In this situation the rim elevation of the clean-out installed at the property line shall be at least 6-inches below the overflow elevation of the lowest wastewater fixture on the lateral. A backflow prevention device is required on the lateral.

14. SEPARATION BETWEEN SEWER AND WATER AND RECYCLED WATER LINES

Horizontal and vertical separation between sewer mains and water and reclaimed water lines will be provided in accordance with the State Water Resources Control Board "Criteria for Separation of Water mains and Sanitary Sewers" and GGSD Standard Drawing No. S-118.

15. HOUSE LATERALS

Sewer laterals shall be constructed to the property line from the main line and there shall be a separate lateral for each individually owned building.

Sewer laterals shall have a minimum 4-inch diameter. Apartment and condominium developments shall have at least one (1) 6-inch, or one (1) 8-inch lateral to serve each building in the development which contains more than one dwelling unit.

Laterals shall have a minimum slope of 2%.

Laterals shall be located at the center of each lot and shall be constructed perpendicular or radial to the property line. If the developer must install a sewer lateral at a location other than in the center of a lot due to unavoidable interference, the improvement plans shall indicate the centerline station of the lateral on the sewer and show the distance from a property corner. In no case shall a sewer lateral be located within 12 feet of a property corner. Refer to Section 13 and Standard Plan S-105 for cleanouts on laterals.

Permanent visible monuments shall be set to indicate the locations of all sewer laterals. A 1½-inch high "S" shall be chiseled in face of curb where the lateral crosses under the curb or on the edge of alleys without curbs. The method used shall be indicated on the plans. A licensed Civil Engineer or Land Surveyor shall verify locations of set monuments.

The sewer laterals from the main to the building, and inside the buildings are governed by the Uniform Plumbing Code and enforced by the City of Garden Grove Building Official.

The sewer house laterals between the main sewer line and the property line are owned by the property owner, and **NOT** by the Garden Grove Sanitary District.

16. PRIVATE SEWER SYSTEMS

All plans submitted for review and approval for commercial/industrial developments and residential developments with private sewer systems shall show the plans, profiles, and details of private onsite sewer systems. The private sewer systems shall be planned,

designed, and constructed to the same standards as the Garden Grove Sanitary District's public sewer system.

Sewer pump stations on private property shall be designed, administered, and inspected by the Garden Grove Sanitary District or its designated representative. The private property owner shall be responsible for all costs associated with such design, administration, and inspection.

Each site shall be reviewed on an individual basis at the time plans are submitted. As a condition of service, the Garden Grove Sanitary District shall require the property owner to enter into an agreement with the District acknowledging that the onsite facilities are private and shall be properly maintained according to industry standards and the State Water Resources Control Board's General Waste Discharge Requirements 2006-0003. The property owner shall further agree to hold the District and the City of Garden Grove harmless from any claims on the design, maintenance and operation of the private onsite systems. The property owner shall prepare an Overflow Emergency Response Plan and a Preventative Maintenance Plan as required by Order No. 2006-0003.

All onsite sewer collection systems for commercial/industrial developments shall be private and shall be owned, operated and maintained by the property owner up to the District's sewer line in a public street. A cleanout or manhole shall be installed at the owner's side of the property line in accordance with District Standard Plans S-105 or S-100 through S-104. Each building onsite shall have an individual sewer lateral with a monitoring manhole. Monitoring manholes shall be installed in accordance with District criteria. All laterals from a building shall be connected to the main lateral upstream of the monitoring manhole for that building. No lateral connections are to be made downstream of the monitoring manhole.

17. SEWER PUMP STATIONS

17.1 General

All sewer pump stations conveying wastewater flows to the Garden Grove Sanitary District's collection system, including those from private systems, shall be designed, administered, and inspected by the Garden Grove Sanitary District, or its authorized representative.

The general criteria outlined herein shall apply to all sewer pump stations. The detailed design criteria for each sewer pump station will be established based upon the specific conditions of each installation on a case-by-case basis and documented in a preliminary design report. Sewer pump stations shall be designed according to the following criteria:

Small sewer pump stations, where the peak wet weather flow can be pumped with a maximum of two duty pumps of 1,500 gpm capacity, shall be the stainless steel slide-rail submersible type with a minimum of two recessed impeller or enclosed screw impeller centrifugal pumps, permanent standby generator/automatic transfer switch, and peak flow storage.

Larger sewer pump stations shall be wet well-dry well type with permanent standby generator/automatic transfer switch, and peak flow storage. The District Engineer may allow slide rail submersible pump stations if project conditions warrant it. Pumps shall be either the recessed impeller, or enclosed screw impeller type, as determined by the District Engineer.

17.2 Standards and Codes

Sewer pump station designs shall be based upon current codes and standards, including but not limited to:

- Statewide General Waste Discharge Requirements covered under Order No. 2006-0003 issued by the State Water Resources Control Board on May 2, 2006
- Hydraulic Institute Standards
- California Administrative Code, Title 8, Article 59-Electrical Safety Orders
- National Electrical Code
- NFPA 820 Fire Protection in Wastewater Treatment Plant and Collection System Facilities
- Uniform Building Code
- Uniform Plumbing Code
- Uniform Mechanical Code
- California Fire Code
- National Electrical Manufacturers Association (NEMA)
- American Society of Heating, Refrigerating, and Air Conditioning Engineers (ASHRAE)
- Standard Specifications for Public Works Construction
- Standard Plans for Public Works Construction
- OSHA Construction Safety Orders
- American Water Works Association
- American Society for Testing Materials

17.3 Design Flows and Heads

The pump stations shall be designed with a firm pumping capacity equaling the greater of:

- Tributary peak wet weather flow
- Flow that will provide a minimum velocity of 3 fps in the force main.

The standby pump will have the same capacity as the largest pump in the pump station.

In selecting the number, capacity, and operating characteristics of the pumps, the minimum, average, peak dry weather and peak wet weather flows, as well as wet well size and operating band shall be considered. The selected design shall minimize pump cycling and odors.

The total dynamic head (the sum of static lift, velocity head, and frictional losses in the station piping/ valving and force main) shall be determined for all operating conditions, wet

well and discharge point water surface elevations, and a range of frictional coefficients (Hazen Williams C factor of 80 to 150).

Calculations documenting the determination of flows and head calculations shall be submitted along with pump curves and catalog information for the recommended pumps. Prior to final acceptance, the design engineer shall obtain written verification from the recommended pump manufacturers that the selected pumps shall perform throughout their operating range as designed at the published efficiencies free from cavitation, vibration, and premature failure.

17.4 Drivers

The pumps shall be driven by submersible or vertical dry pit immersible motors. All motors shall be Factory Mutual (FM) or Underwriters Laboratories, Inc. (UL) listed explosion proof type. Motors operated by variable frequency drives shall be inverter duty motors. Nameplate horsepower shall be at least 20 percent greater than the maximum brake horsepower needed within the operating range of the pump.

Variable frequency drives shall be provided with bypass contactors to operate the pumps at full speed.

Small pump stations may be designed with constant speed pumps. Larger pump stations may require the use of variable speed drives. The decision of the District Engineer of the Garden Grove Sanitary District shall be final as to the type of driver to be used.

17.5 Wet Well

The wet well shall be sized to

- Provide adequate submergence
- Provide adequate net positive suction head available (NPSHA)
- Prevent frequent pump cycling
- Provide emergency storage

Submergence provided shall prevent formation of vortices and air being drawn into the pump. It shall also prevent cavitation. The minimum submergence shall be at least one foot greater than that required by the pump manufacturer.

The net positive suction head available shall be calculated as:

$$NPSHA=2.24\ (P_a-P_v)-H_l \pm Z$$

Where

P_a= Atmospheric pressure (psia)

P_v= Vapor Pressure of liquid at the maximum expected temperature (use 0.59 psia)

H_l= Friction and minor losses between the wet well and the pump suction flange in feet of liquid

Z= Difference in elevation between the minimum wet well water level and pump datum, in feet. Use – when the pump datum is higher than the minimum wet well water level.

The minimum NPSHA shall be at least eight feet greater than the net positive suction head required (NPSHR) by the selected pump for the maximum expected flow through the pump.

The wet well shall be sized to provide the storage capacity which will preclude exceeding the following number of pump starts per hour:

Motor Horsepower	Maximum Starts per Hour	Minimum Cycling Time (Minutes)
Up to 20	6	10
25 to 50	4	15
60 to 75	3	20
100 and larger	2	30

Wet well bottom corners shall be sloped at 1:1 and slope to the suction pipe inlet to prevent the accumulation of debris on the wet well floor.

Influent pipe(s) shall not enter the wet well in a position which may cause pre-rotation of the flow into the pump suction, and turbulence in the wet well. The influent velocity into the wet well shall be no greater than three (3) feet per second.

For large pump stations, a partition wall(s) with sluice gates may be required to isolate a portion of the wet well for cleaning.

17.6 Emergency Storage

Emergency storage volume needed shall be evaluated for each pump station based upon the tributary area and expected ultimate wastewater flows. The minimum volume of emergency storage shall be 30 minutes of ultimate peak wet weather flow without surcharging the tributary collection system. The emergency storage volume may be provided in the wet well or in a separate adjacent PVC lined overflow structure.

Where possible, the invert of the overflow structure shall be higher than the low water elevation of the pump station wet well to allow gravity drainage of the stored sewage to the wet well. There shall be a minimum of two connecting pipes between the overflow structure and the wet well. The connecting pipes shall be equipped with flap gates on the wet well side. The floor of the overflow structure shall slope to the connecting pipes.

All overflow structures shall be equipped with an access hatch, and three 30-inch diameter maintenance access holes. A 2-1/2 inch hydrant water connection shall be provided near the overflow structure for use in periodic cleaning. The water supply to the hydrant water connection shall have a reduced pressure backflow preventer.

The higher of the maximum storage level and overflow level shall be set at least one foot (1-ft) lower than the top of the lowest manhole in the system, basement or p-trap of the plumbing fixture connected to the system.

17.7 Dry Well

The dry well shall meet the following criteria:

A. Pumps shall be placed to provide minimum clear space of 3'-6"

B. The lowest level of the pump station dry well shall have a sump pit with duplex explosion proof submersible pumps controlled by float switches. The sump pumps shall discharge to the wet well above the maximum water level.

C. Discharge piping and the force main shall be placed in the dry well along the common wall with the wet well. The flow meter shall be placed inside the dry well sufficiently downstream of the last pump discharge pipe. If there is not sufficient room, the flow meter shall be placed in a below grade vault adjacent to the pump station structure.

D. Catwalks or mezzanine levels shall be provided to access the flow meters, valves, and other portions of the equipment

17.8 Standby Equipment

All pump stations shall have standby equipment capable of handling the ultimate peak wet weather flow during a commercial power outage and/or with the largest unit out of service. This criterion shall apply to all essential electrical and mechanical equipment including pumps/motors, fans, air compressors and sump pumps.

There shall be a minimum of one **standby main sewage pump** equal in size to the largest duty main sewage pump in the station.

All pump stations shall have a **permanent standby generator** and an **automatic transfer switch** sized to start and operate all the sewage pumps needed for ultimate peak wet weather flow, sump pump, ventilation fans, lighting, instrumentation, controls, and telemetry, with voltage dip not to exceed 16% when starting any motor.

Generators shall be skid mounted, permanently anchored to the foundation, and housed in an acoustically insulated enclosure. Exhaust mufflers shall be super critical grade designed for noise level not to exceed the noise level allowed within each particular area.

Load banks sized for 80% of the generator capacity shall be provided. Load banks shall be mounted in the vicinity of the generator and protected with adequate enclosure suitable for the location as required by NEMA Standards.

Portable trailer mounted generators are acceptable only for locations where installation of a permanent skid-mounted generator is not feasible. When a portable trailer mounted generator is furnished, a power receptacle shall be permanently installed for quick connection.

Standby generators shall be furnished with battery chargers and block heaters.

The standby generator shall be a diesel or natural gas powered generator. The diesel fuel powered generators shall be equipped with a sub-base fuel tank sized for a minimum of 12

hours of continuous full load operation. Standby generators shall be units pre-approved by the South Coast Air Quality Management District.

17.9 Pumps

Pumps shall be the enclosed screw-centrifugal or recessed impeller type. Wet well-dry well pumps shall be suitable for operation when the dry well is flooded. Pumping capacity and head shall be considered in the selection of the type of pump for the wet well-dry well pump stations.

RECESSED IMPELLER CENTRIFUGAL PUMPS

Recessed impeller centrifugal pumps are designed to handle stringy materials and up to 25 times the amount of solids of conventional non-clog pumps. Some recessed impellers are labeled by pump manufacturers as torque-flow, bladeless and sphere flow. However, all of these pump models follow the general design of placing the impeller away from the fluid stream in order to pass stringy material without clogging the hydraulic passages.

The recommended minimum design criteria in the selection of recessed impeller centrifugal pumps are as follows:

a. Pump impeller shall be selected with the best possible efficiency at design point or at the operating range of the pump.

b. Maximum Speed

1750 rpm or shall not exceed the limitation as recommended by the Hydraulic Institute Standards for Centrifugal Pump application

c. Materials of Construction

- NiHard (minimum of 550 Brinnell hardness) or stainless steel Type 316 impeller with a removable wear plate of the same material as the impeller
- NiHard (minimum of 550 Brinnell hardness) or cast iron casing, as determined by the District Engineer.
- Stainless steel Type 316 shaft.
- Tandem mechanical shaft seal system for the motor with two totally independent seal assemblies and Tungsten-Carbide seal faces

d. Upper and Lower Bearings

Radial and thrust bearings, grease lubricated with minimum B-10 bearing life of 60,000 hours for the operating range of the pump.

e. Slide Away Coupling

Foot mounted discharge elbow and adaptor, base plate, upper and lower rail supports, lifting yoke, and cable. All metal to metal interfaces where movement may occur shall be non-sparking.

f. Electric Motor

- For wet well installation, motors shall be FM or UL listed, and be designed for Class I, Group D, Division 1 explosion proof.
- NEMA Design B, heavy duty, high efficiency, non-overloading, with a nameplate horsepower at least 20% greater than the maximum horsepower required over the entire operating range.
- Thermal overload protectors imbedded in the motor windings.
- Dual moisture or leak sensors on the sealing chamber.

- Motors shall be immersible capable of operating continuously in air without the use of sewage pumped for cooling if installed in a dry well.
- Motors in damp locations and dry pits shall have two cycles of solid baked epoxy vacuum impregnation.
- Motors shall be inverter duty if operated by variable frequency drives.

g. Painting and Coating

All non-stainless steel wetted surfaces in contact with wastewater shall be coated with coal tar epoxy enamel. Surface preparation shall be in accordance with SSPC-SP5, white metal blast cleaning. Prime coat to DFT=l.5 mils, Amercoat 71, Engard 422 or approved equal. Two or more coats, DFT=16 mils, Amercoat 78HB, Engard 464 or approved equal. Total system DFT=17.5 mils.

All non-stainless steel external surfaces exposed to corrosive environment shall be coated and painted by amine-cured epoxy. Surface preparation shall be in accordance with alkaline cleaned, SSPC-SP1. Prime coat and finish coat shall be three or more, DFT=16 mils. Amercoat 395, Engard 480 or approved equal.

SCREW-CENTRIFUGAL PUMPS

The recommended minimum design criteria in the selection of the screw-centrifugal pumps are as follows:

a. Pump impeller shall be selected with the best possible efficiency at design point or at the operating range of the pump.

b. Maximum Speed

- 1750 rpm for pumps with discharge nozzle diameter up to 12-inch,
- 1175 rpm for pumps with discharge nozzle diameter from 14 to 16-inch,
- Shall not exceed the speed limitation recommended by the Hydraulic Institute Standards for Centrifugal Pumps.

c. Materials of Construction

- Cast iron with Hi Chrome suction liner or 316 Stainless steel where available
- Stainless steel Type 316 impeller and shaft.
- Tandem mechanical shaft seal system for the motor with two totally independent seal assemblies and Tungsten-Carbide seal faces and silicone carbide lower seal
- Minimum B-10 bearing life of 60,000 hours for the operating range of the pump.

d. Electric Motor

- For wet well installation, motors shall be FM or UL listed, and be designed for Class I, Group D, Division 1 explosion proof.
- Thermal overload protectors imbedded in the motor windings.
- Dual moisture or leak sensors on the sealing chamber.
- Motors shall be NEMA Design B, heavy-duty, high efficiency with Class B or F insulation. Motors shall be non-overloading over the entire operating range, with a nameplate horsepower rating a minimum of 20

percent greater than the maximum horsepower required over the operating range.

- Motors located in a damp environment and in a dry pit shall have 2 cycles of solid baked epoxy vacuum impregnation.
- Motors shall be inverter duty if operated by variable frequency drives.
- Motors shall be immersible, capable of operating continuously in air without the use of sewage pumped for cooling if installed in a dry well.

e. Painting and Coating

All non-stainless steel wetted surfaces in contact with wastewater shall be coated with coal tar epoxy enamel. Surface preparation shall be in accordance with SSPC-SP5, white metal blast cleaning. Prime coat to DFT=1.5 mils, Amercoat 71, Engard 422 or approved equal. Two or more coats, DFT=16 rails, Amercoat 78HB, Engard 464 or approved equal. Total system DFT=17.5 mils.

Non-stainless steel external surface exposed to corrosive environment shall be coated and painted by amine cured epoxy. Surface preparation shall be in accordance with alkaline cleaned, SSPC-SP1. Prime coat and finish coat shall be three or more, DFT=16 mils. Amercoat 395, Engard 480 or approved equal.

17.10 Valves and Gates

Pump stations are equipped with various types of valves to prevent backflow, to isolate the equipment from the system, to control hydraulic surges and to drain the piping system during scheduled repair and maintenance. Each valve type differs in construction, materials, and operation depending on the service and application. All valves shall be suitable for wastewater service.

All interior surfaces of valves in contact with wastewater shall be epoxy coated. All valves 10-inch diameter and larger shall be provided with motor operators. Manually operated valves located more than six feet above the operating floor shall be equipped with chain wheel operators, with the chain extended 36 inches above finish floor. Motor operated valves shall be provided with a manual hand wheel and manual push button station conveniently located below the valve, 5 feet above finished floor.

SLUICE GATES

Sluice gates shall be furnished with stainless steel frames and slides with embedded bronze seats, Type 316 stainless steel stem, and adjustable bronze bushed stem guides. Sluice gate manual operator shall have AWWA square nut; manual crank operator with floor stand and 2-speed gear reducer designed for opening time of not to exceed six minutes. Motor operator shall be provided when required by the District Engineer. Motor operated gates shall be designed for opening and closing times of one foot per minute.

Sluice gates shall be specified to be furnished with pattern wall thimbles to match the concrete thickness where the gate is to be installed.

Sluice gates shall be Rodney Hunt or approved equal.

ECCENTRIC PLUG VALVES

Non-lubricated eccentric plug valves shall be used as isolation valves. Valves shall have hard rubber (suitable for sewage service) resilient faced plugs and flanged ends. Valve seats and discs shall be stainless steel, Type 316. Bodies shall be semi-steel with raised seats. Valves shall be of the bolted bonnet design. Valve design shall allow repacking without removing the bonnet, and the packing shall be adjustable. All exposed nuts, bolts, springs, and washers shall be stainless steel, Type 316. Valves shall have permanently lubricated stainless steel bearings in the upper and lower plugstem journals.

Manual valves shall have a 2-inch square nut and lever actuator. Levers shall be field cut as required to be operable in their installed locations.

Eccentric plug valves may be used as pump control valve to alleviate hydraulic surges during normal starting and stopping of the pumps and as surge anticipators when required. These valves shall have hydraulic cylinder type operators with adjustable opening and closing times. Where the valve is used as a surge relief valve, emergency (upon failure of power supply) opening and closing times shall be specified.

Where space permits, all eccentric plug valves shall be installed with the shaft in the horizontal position. The orientation of the plug with respect to the fluid flow direction shall be as recommended by the manufacturer. The valve manufacturer's recommended installation instructions to prevent clogging of the valves during extended shutdown periods shall be strictly followed.

Valves shall have unobstructed port area of not less than 80-percent of total pipe area.

Eccentric plug valves shall be as manufactured by DeZurik Corporation, Keystone, Drum-Owens (Homestead), Milliken, or approved equal.

BALL VALVES

When required by the District Engineer, ball valves shall be used as pump control valves or for surge relief where flow characteristics require the valve trim that would match that of the ball valves.

Small diameter ball valves (3/4 inch to 2-1/2 inch diameter) shall be used as isolation shut off valves for potable or pump station water system.

All ball valves shall be in accordance with ANSI/AWWA C 507, with cast iron, ductile iron, cast steel, or stainless steel bodies, support legs or pads, flange ends, suitable for velocities up to 35 fps, temperatures up to 125 degrees F, and design pressures to 150, or 250 psi depending on the pressure range required by the system. The balls shall be cast iron, ductile iron, cast steel or stainless steel, shaft or trunion-mounted, with tight shut-off, single or double seat, and full bore. The valves shall be rubber, with stainless steel or monel shafts, and at least one thrust bearing. Except for stainless steel, ferrous surfaces of valves in contact with wastewater shall be minimum 16 mil epoxy-coated.

Ball valves shall be as manufactured by Jamesbury Corporation, Wm. Powell Company, or approved equal.

CHECK VALVES

Check valves shall be installed at each pump discharge piping to prevent backflow of wastewater which can cause severe damage to the pump impeller and shaft, and recirculation of flows back to the wet well in stations with multiple pumps. Valves shall comply with the requirements of AWWA C508.

Check valves shall be the outside lever and weight type swing check valves. They shall be installed in the horizontal position to prevent accumulation of solids downstream of the valve which can cause clogging of the valves.

Swing check valves shall have a flanged cover piece to provide access to the disc. The valve body, cover, and disk shall be cast iron conforming to ASTM A 126 Grade B. Disc facing shall be rubber conforming to ASTM D2000 2BG715. Seat ring and clapper arm shall be cast bronze conforming to ASTM B584 Alloy C 84400. Clapper arm shall be clamped to the hinge pin with stainless steel screws and jam nuts.

Ferrous surfaces of valves in contact with wastewater shall be minimum 16 mil epoxy coated.

Swing check valves shall be as manufactured by APCO (Valve and Primer Corp.), Kennedy, Crane Company, or approved equal.

SEWAGE SURGE RELIEF VALVES

The necessity for surge control devices shall be determined through a complete surge analysis of the pumping system. Although surge tanks are the most reliable means to alleviate damaging surges in the force mains, sewage surge relief valves may be required by the system. Where surge relief valves are required, the valve shall be installed in the discharge piping manifold and connected to the wet well. The valve shall be designed to open immediately when the system pressure exceeds the load setting of the counterweights and shall close slowly at an adjustable speed upon return of system pressure to normal.

The surge relief valve body shall be constructed of a heavy cast-iron or cast steel disc having rubber seating face; and corrosion resistant shaft and cushion chamber.

Sewage surge relief valves shall be as manufactured by APCO (Valve and Primer Corporation), Empire Specialty Co., Inc, or approved equal.

SEWAGE AIR RELEASE VALVES

Sewage air release valves shall **not** be used unless **absolutely necessary**. The design engineer shall endeavor to provide a system which rises continuously from the pump station to the discharge point. Where absolutely necessary, sewage air release valves shall be provided to vent accumulating air or gas during pumping operation or entrapped during initial operation. Air release valves shall be installed at high points of the piping systems. Entrapped air or gases can reduce pumping capacity of the pumping system or cause

corrosion of the piping system with gases containing hydrogen sulfide. The air or gas vent located at the pump station plant shall be discharged to the wet well.

The valves shall have long float stems and bodies to minimize clogging. Each valve shall be furnished with backwashing accessories to remove solids accumulated inside the valve. Water supply and connection shall be provided with appropriate reduced pressure backflow preventer near the valve for backwashing.

Sewage air release valves shall be as manufactured by APCO (Valve and Primer Corporation), Val-Matic (Valve Manufacturing Corporation), or approved equal.

REDUCED PRESSURE BACKFLOW PREVENTERS

Backflow preventers shall be installed where utility water or plant water is connected to the potable water supply to prevent contamination of the potable water system. The valves shall be designed to operate on the reduced pressure principle. The valve assembly shall consist of two spring loaded check valves, automatic differential pressure relief valve, drain valves and shut-off valves. The body materials shall be bronze for working pressure of not less than 150 psi, with bronze and stainless steel trim. Drain lines and air gaps shall be provided. All backflow preventers shall be registered with County Health Department and must be approved for use in the Garden Grove Sanitary District.

Backflow prevention valves shall be as manufactured by Cla-Val Company or Febco.

PUMP CONTROL VALVES

The pump control valves shall be installed in the pump discharge pipe to minimize hydraulic surges during normal starting, stopping and emergency stopping of the pump during power failure or emergency stopping caused by system failures.

The pump control valve shall be operated by hydraulic (oil) or pneumatic operator with a reserve accumulator system as back-up energy source to operate the valve during power failure. The pump control system shall be designed to start the pump against a closed valve. Once the pump has developed pressure, the pump control valve shall start to open until it reaches the maximum open position. Stopping sequence shall cause the pump control valve to close. Complete closure of the valve shall signal the pump to stop. Emergency power failure shall cause the pump control valve to close.

The normal opening, closing, and emergency closing times of the pump control valve shall be independently adjustable. Range of adjustment shall be determined based upon the results of surge analysis. Final settings of closing and opening times shall be verified during pump station start-up. Settings shall be included in the Operation and Maintenance Manual.

17.11 Magnetic Flow Meters

Each pump station shall be equipped with metering equipment to measure outlet flow and provide flow signal for recording, totalizing and control of other equipment. In addition, the flow meter shall be used for pump field performance test to measure capacity and efficiency. The meter shall be magnetic type suitable for wastewater service.

Magnetic flow meters shall be provided at the pump station discharge manifold capable of metering the full range of flow with an accuracy of ±1 percent of flow rate from 10 to 100 percent of scale. At a velocity below 1 foot per second, the accuracy shall be ±0.1 percent of the full scale. The meter shall be installed in the piping manifold with minimum straight approach of 4 and 2 diameters upstream and downstream respectively.

The size of the flow meter shall be selected to cover the entire velocity range expected.

The magnetic flow meter shall utilize characterized electromagnetic induction to produce a voltage linearly proportional to the average flow rate. The metering system shall consist of a sensor with field coils, transmitter and interconnecting cables to make a complete operating flow metering system. The meter shall be bipolar pulsed dc type with continuous automatic zeroing.

The sensor shall be flange tube with non-conductive liner. The tube shall be constructed of Type 316 stainless steel with carbon steel flanges AWWA Class D if the coils are external to the tube. The sensor rating shall be NEMA 4, and capable of withstanding accidental submergence in water to a depth of 30 feet for 48 hours. The meter shall include a positive zero feature for periods when the metering portion of the process pipe is not full.

Liner material shall be neoprene, except for liquids which may deposit non-conductive coatings, which shall have Teflon linings. The specific conductivity of the liquid shall not preclude meter operation.

Grounding electrodes shall be of the same material as the sensing electrodes and shall be furnished mounted on each end of all flanges.

Transmitters shall be provided for either local or remote indication as required for each particular project. Remote transmitters shall be NEMA-4X enclosures suitable for wall mounting. Transmitters shall produce a 4-20 ma-dc output signal into a minimum load of 800 ohms linear flow, and a scaled pulse for totalization. All electrical equipment furnished with the magnetic flow meter shall carry a UL label.

Magnetic flow meters shall be Tigermag manufactured by Sparling Instrument Co., Inc. or approved equal.

17.12 Piping and Support System

The pump station piping and supports system consists of the gravity sewer, pump suction and discharge piping, station water or utility water piping, potable water piping, air piping, sanitary drainage piping, fire protection, and sprinkler piping systems. Most of these piping systems are adequately specified by the applicable sections of the Uniform Plumbing Code, Fire Codes and the Standard Specifications for Public Works Construction.

This Section includes special requirements and recommended practices involving the design of piping and the support system.

A. Piping

1. Materials

Ductile iron pipe shall be used in pump station main piping, consisting of suction and discharge piping, discharge manifolds, force mains as specified in Section 11, and water piping 2-1/2 inch and larger. Ductile iron pipe shall be in accordance with SSPWC, and ANSI A21.5l (AWWA C151). All internal surfaces of ductile iron pipe and fittings for water service shall be cement mortar lined and sealed with bituminous coating in conformance with AWWA C104. Internal surfaces of ductile iron pipe for sewer service shall be lined with polyurethane or glass.

Unless otherwise specified, all joints of ductile iron pipe shall be 125-lb flange in conformance with ANSI B16.1, B16.2 and A21.10 (AWWA C110). Sleeve or mechanical grooved type couplings shall be provided at the suction and discharge piping of the pump, and between the magnetic flow meter and the isolation valves to allow removal of the equipment for maintenance.

All bolts shall be of Type 316 stainless steel with bronze nuts or cap screws of copper—copper silicon alloy, conforming to ASTM B 98, Alloy C 65100, designation H04, or alloy C 65500, designation H04. Where anaerobic conditions are anticipated, Type 304 stainless steel shall be used.

Mechanical-type couplings (grooved) shall be used between the valves, pumps, meters and the piping system for the above ground installation. Groove type couplings shall not be used for underground installation. Mechanical-type couplings shall be cast as manufactured by Victaulic, Gustin Bacon or approved equal.

Sleeve-type couplings shall be of fabricated steel with steel bolts and with sizes to fit outside diameter of the ductile iron pipe. The middle ring shall not be less than 1/4-inch in thickness and minimum of 5 to 7-inches long. The follower shall be single piece contoured mill section welded and cold-expanded as required for the middle rings. The coupling shall be equipped with a gasket to make the joint water-tight. The coupling shall be factory epoxy coated suitable for sewer service.

Sleeve couplings shall be installed in the piping systems subject to differential settlement as in the force main that connects the piping inside the pump station building to the yard piping. Two sets of sleeve couplings shall be installed with spacing as recommended by the coupling manufacturer.

Where sleeve couplings are installed in the piping system subject to thrust loads, the coupling shall be provided with restraining bolts. The bolts shall be designed in conformance with AWWA Design Manual M-11.

Sleeve-type couplings shall be as manufactured by Rockwell (Smith-Blair), or Dresser.

2. Suction Pipe

The suction pipe shall meet the following requirements:

a. The suction pipe shall be sized to provide a minimum velocity of 3 feet per second, and a maximum velocity of 6 feet per second throughout the operational range of the pump.

b. The inlet velocity to the eye of the impeller shall meet the pump manufacturer's requirements. The largest suction inlet available shall be selected.

c. The suction pipe shall be flat, or slope up to the pump to eliminate the formation of air pockets. Reducers shall be the eccentric type, with flat top, matching the crown of the suction pipe.

d. There shall be a straight length of pipe of minimum 5 diameters before the suction elbow to provide uniform flow to the pump.

e. The inlet of the suction pipe shall be a long radius elbow with a flared bell. The inlet location shall be in accordance with the hydraulic institute standards. The velocity at the inlet to the suction bell shall be less than 2.5 feet per second.

f. The suction line isolation valve shall be full port eccentric plug valve located close to the wet well wall, allowing sufficient room for removal of the bolts and servicing of the valve.

g. A pressure gauge capable of measuring the entire range of pressures expected at the entrance to the pump shall be provided as close to the pump as possible. The gauge shall be installed on a ½ inch NPT pipe tap with a ball isolation valve and chem seal with snubber.

3. Discharge Pipe

The discharge pipe shall meet the following requirements:

a. Discharge pipes shall be sized for a minimum velocity of 3 feet per second and a maximum velocity of 6 feet per second.

b. The discharge nozzle for dry well installed pumps shall be directed towards the wet well and rotated 45 degrees from the suction line.

c. The discharge pipe shall be connected to the discharge header at an angle of 45 degrees.

d. A pressure gauge shall be installed on the discharge nozzle or as close to the pump as possible. The gauge shall be installed on a ½ inch NPT diameter pipe tap with a ball isolation valve and chem seal with snubber.

e. A 1-1/2 inch diameter pipe with a ball isolation valve shall be installed between the top of the pump casing and the wet well.

B. Pipe Support Systems

All piping systems, including connections to equipment, shall be designed with proper support to prevent undue deflection, vibration, and stresses on piping, equipment, and structures resulting from normal operation and seismic events. All supports and parts thereof shall conform to the requirements of ANSI/ASME B 31.1 except as specified herein.

Ductile iron pipe of any size shall have a minimum of 2 supports per straight length not to exceed 10 feet of unsupported span. One of the supports shall be located at the joint.

Where the piping system is subject to thrust as a result of hydraulic surge or actuation of a surge relief valve, a thrust support or a hydraulic shock suppressor shall be provided.

All pipe supports shall be galvanized after fabrication. Pipe supports shall have a minimum of 1-1/2 inch thick dry pack between the floor and the support base.

17.13 Ancillary Equipment

Each pump station shall be designed to provide the necessary ancillary equipment to support the operation and maintenance of the facility. This equipment is essential to the operation and maintenance of the system. Ancillary equipment or systems that are discussed herein are commonly required equipment or systems in a wet well-dry well pump station.

A. Hoisting Equipment

Most pump stations are located underground to provide adequate submergence for the pumps. Therefore, the substructure and superstructure need to be designed to allow for installation and removal of equipment. The provisions for access hatches, lifting hooks, hoisting systems, roll-up doors and other means to provide ease of maintenance shall be carefully investigated and designed as required.

For wet well-dry well type pump stations equipped with either vertical non-clog dry well pumps or submersible pumps mounted in the dry well, a traveling bridge crane shall be provided. The bridge crane shall be designed to have a travel and span capable of reaching the pumps, meters and valves. Where the valves are located in areas which are inaccessible to the crane, lifting eyes attached to the ceiling shall be provided directly above the valve or equipment. A floor access hatch shall be provided when required.

Bridge cranes shall have a manually or electrically operated hoist, trolley and end trucks, all designed to conform to all applicable codes, and OSHA safety requirements. Where possible, monorail hoists may be used in lieu of the traveling bridge cranes.

Where space permits, a hoisting system shall be designed to allow direct transfer of equipment from the dry well to a flat bed truck. Traffic into the pump station building shall be given special consideration and necessary turning radius shall be provided.

B. HVAC and Odor Control Systems

A typical pump station consists of the wet well, dry well or the pump room, motor room, electrical and control room, and ancillary equipment rooms. Each of these rooms requires different methods and degrees of heating, air conditioning and ventilation to provide the following conditions:

1. A safe and comfortable working environment for personnel;

2. To facilitate proper operation of equipment;

3. To minimize corrosion of equipment and building materials; and

4. To prevent accumulation of explosive and hazardous gases.

The heating, ventilating and air conditioning (HVAC) system and odor control systems shall be designed and controlled as one integrated system. Air distribution, building enclosures, wall penetrations, wind directions, building occupancies, and area classifications shall be carefully investigated. HVAC systems shall be designed in accordance with the American Society of Heating, Refrigerating and Air Conditioning Engineers (ASHRAE), State of California Energy Conservation Standards Title 24 and the NFPA 820 Fire Protection in Wastewater Treatment Plants.

Equipment conveying corrosives shall be of material that is corrosion resistant, such as fiberglass reinforced plastic (FRP) or stainless steel. If FRP ductwork is used, it shall have flame spread of less than 25, and a smoke propagation of less than 400, and be of fire resistant rating. Air containing flammable and explosive vapors or toxic gases shall not be recirculated.

Air conditioning may be required for pump stations with VFD's.

Depending upon classification, motors for supply and exhaust fans shall be explosion proof, totally enclosed fan cooled (TEFC) units.

C. Wet Well Ventilation

The pump station wet well receives and stores wastewater before it is pumped to the force main. Corrosive and hazardous gases are normally present in the wet well. These gases can become a safety hazard to operating personnel or can cause corrosion of building materials and equipment in the wet well. In order to minimize accumulation of gases inside the wet well, the wet well shall be flushed with fresh air by an adequately sized ventilation system.

Ventilation rates shall be in accordance with:

1. NFPA 820 Fire Protection in Wastewater Treatment Plants

2. Occupational Health and Safety Act (OSHA)

Pump station wet wells are classified into two types depending on their use;

1. Accessible Wet Well.

2. Sealed Wet Well.

ACCESSIBLE WET WELLS

Wet wells which require routine access for maintenance shall be provided with adequate fresh air ventilation in order to provide a safe environment for maintenance personnel, to prevent accumulation of explosive gases, and to minimize corrosion of equipment installed in the wet well. The internal surfaces of the wet well shall be lined with PVC for corrosion protection.

The following minimum ventilation criteria shall be used:

1. All accessible wet wells shall be provided with continuous ventilation of a minimum of 15 air changes per hour.

2. Where intermittent ventilation is required, the ventilation rate shall be at least 30 air changes per hour.

All electrical equipment and fans inside the accessible wet well shall be explosion-proof designed and manufactured for Class I, Division I, Group D. All other design criteria shall be in accordance with NFPA 820 Fire Protection in Wastewater Treatment Plants.

SEALED WET WELLS

Sealed wet wells shall be designed to be low maintenance. The internal surfaces of the wet well shall be lined with PVC for corrosion protection.

Sealed wet wells shall be provided with static vents to accommodate air displacement due to the rise and fall of the water level in the wet well. The vent shall have a minimum diameter of one-half the diameter of the incoming sewer. The vent pipe shall be connected to the nearest sewer maintenance hole where possible. Where the pump station is located away from any sensitive area, vent pipe could be extended above the roof line with a minimum of 15 feet from any window or fresh air inlet.

All electrical equipment inside the sealed wet well shall be classified in accordance with NFPA 820, Fire Protection in Wastewater Treatment and Collection System Facilities.

C. Odor Control

The need for odor control systems shall be evaluated for each project. Such evaluation shall be based on a life cycle cost of 20 years with major consideration of the power and chemical consumption, first cost, maintenance cost, reliability and efficiency of the system.

Wet well odor control shall consist of a water misting system. Activated carbon scrubbers, chemical scrubbers utilizing a chemical absorption process for removal of odors, or chemical or air injection systems may be necessary for odor control in other parts of a pump station.

For the chemical scrubbing systems, foul air from the plant process facility is introduced into the scrubber vessel with an atomized mist chemical solution containing sodium hypochlorite. Oxidation of odorous compounds occurs upon contact with the scrubbing mist, and is removed in the condensate. The scrubber shall be designed to remove a minimum of 99 percent of hydrogen sulfide in the foul stream. Acceptable chemical scrubber manufacturers are Calvert Environmental Co., San Diego, CA, and Quad Environmental Technologies, Corp., Highland Park, IL.

All odor control and ventilation equipment shall be suitable for continuous exposure to saturated hydrogen sulfide gas, sodium hypochlorite mist, sodium hydroxide mist and sulfuric acid. Electrical equipment shall have explosion proof enclosure designed for hazardous condition for Class 1, Division 1, locations.

For air pollution permits, consult South Coast Air Quality Management District.

D. Dry Well Ventilation

The pump station dry well is normally located adjacent to the wet well to house the pumps, valves, meters and other ancillary equipment.

The dry well and equipment rooms shall be designed for a ventilation rate of at least 15 air changes per hour or ventilation rate equivalent to cool internal heat load from the equipment whichever is greater or not greater than 60 air changes per hour. The sensible cooling ventilation rate shall be calculated as follows:

$$H = cfm \times 1.09 \times t$$

where:

H	-	Internal heat gain from equipment, Btu per hour
cfm	-	Air flow, cu ft per minute
t	-	Change in internal temperature, degree F. Use 10 degrees F for change in internal temperature as adequate for sensible cooling.

Where a pump station is equipped with variable frequency drives (VFD), the VFD shall be installed in an air conditioned room with 90 percent efficient outside air filters. VFD units are inherently sensitive to temperature, dust, moisture and other corrosive elements in the air. For constant speed pump stations, the motor control center (MCC) and control rooms shall be equipped with a ventilation fan and 90 percent efficient outside air filters. Pump and equipment room air inlets shall be provided with 30 percent efficient outside air filters. All air filters shall be provided with differential pressure gages to indicate when the filters are clogged, and flow detection devices connected to alarm signaling systems to indicate ventilation system failure.

E. Fire Protection System

Where required by NFPA or by the Fire Department, necessary fire protection systems shall be provided in required areas. For areas housing electrical equipment such as the motor control centers, computer rooms and control rooms, an approved type fire protection systems shall be provided.

F. Gas Detection System

Combustible gas detection equipment shall be provided in the wet well and dry well, and other areas where hazardous gas may be present, to record, activate alarms and/or to operate the ventilation system. The stationary gas detection system shall be capable of measuring concentrations of hydrogen sulfide, methane gas and/or petroleum vapor in the air.

The combustible gas sensor shall be DET-TRONICS Point Watch Infrared Hydrocarbon Gas Detector Model PIR9400 or approved equal. The sensor shall be mounted in the wet well such that it can be removable externally for maintenance and calibration. It shall be connected to the programmable logic controller (PLC). The PLC shall monitor the combustible gas sensor through the 4-20 mA signal which shall be proportional to combustible gas concentrations of zero to 100%. Two (2) PLC adjustable alarms shall be provided. 6% lower explosion level (LEL) shall indicate a warning, and 10% LEL shall indicate an alarm. Alarm beacons shall be installed in the dry well and the electrical room.

An entry control station shall be provided in a NEMA 4X stainless steel enclosure with vandal resistant hardware, and amber and green NEMA 4 vandal resistant pilot lights at or near each entry. They shall indicate a potentially dangerous condition in the pump station based on the loss of the ventilation system, combustible gas, loss of positive pressure in the electrical room, or loss of negative pressure in the dry well. Both lights shall be dark if there is a component or power failure. A lamp test switch shall be provided, which will activate all entry control system lights for ten seconds for testing.

G. Compressed Air System

For pump stations using surge tanks, air operated valves; pneumatic tools for maintenance purposes, and instrument air, a compressed air system shall be provided. The air system for pneumatic tools shall consist of a lubricated type air compressor, receivers, air dryers and necessary piping system. For an instrument air system, a dedicated non-lubricated type air compressor, receiver, dryer and necessary piping system shall be provided. Where the valve operators are designed as pump control valves with the option to have controlled closing during power failure, the air receivers shall be sized to store compressed air capable of stroking the air cylinders three (3) complete cycles between the specified operating pressures during power outages.

H. Hydraulic System

Pump stations equipped with hydraulic operated valves shall be provided with hydraulic systems. The hydraulic system shall be either a package system supplied

with each valve, or one complete package to operate multiple valves. The system shall consist of an oil reservoir, hydraulic pumps, control valves, hydraulic cylinders, limit switches and nitrogen gas-filled accumulators where the valves are required to operate during power outages. The valve opening and closing ranges shall be specified. Final field adjustments shall be made during pump station start-up.

I. Noise Control

The pump station shall be designed to meet the minimum noise level requirement of the Municipal Code of the local jurisdictional agency and the Occupational Safety and Health Administration (CAL/OSHA). All mechanical equipment and enclosures shall be acoustically treated to bring the noise level down to an acceptable limit. These attenuation devices may consist of exhaust mufflers, sound isolators or acoustical panels.

The pump stations shall be designed with noise levels not more than 5 dBA above the ambient noise level as measured at the property line of the nearest recipient (neighbor). A 24 hour noise level reading shall be measured at the pump station site as basis of the design.

In the absence of actual field measurements, the presumed ambient noise level shall be deemed to be the minimum ambient noise level for each zone as follows:

Sound Level "A" Decibels
(In this chart, daytime levels are to be used from 7:00 A.M. to 10:00 P.M. and nighttime levels from 10:00 P.M. to 7:00 A.M.)

Presumed Ambient Noise Level (dBA)

Zone	Day	Night
Residential	50	40
Public Facility, Commercial, Recreational	60	55
Industrial	65	65

At the boundary line between two zones, the presumed ambient noise level of the quieter zone shall be used.

J. Sump Pumps

A sump pit shall be provided in all underground structures such as dry wells, valve and electrical vaults. The sump pit shall be equipped with an adequately sized plus a standby unit, each having a minimum capacity of 50 gpm. Submersible sump pumps shall be used and controlled by a duplex type control, an automatic alternator and a float switch level control. The control system shall be designed to start the standby pump when the lead pump fails to start or when the water level continues to rise while the lead pump is operating. Both pumps are to stop at low water level.

Sump pump discharge pipe, fittings and valves shall be Schedule 80 PVC pipe, with minimum diameter of 2-inches. Each sump pump discharge pipe shall be provided with a swing check valve and isolation gate valve mounted above, both in the vertical

position. A common discharge manifold shall terminate inside the wet well with the wall penetration above the highest surcharge elevation of the wet well.

K. Spare Parts

Pump station electro-mechanical equipment shall be provided with spare parts necessary to ensure continuous operation. The recommended spare parts shall be determined by the project design engineer with assistance from the District Engineer. The following shall be the minimum list of spare parts:

1. One set of pump and motor bearings for each size and model of pump unit.
2. One set of pump seals for each size and model of pump unit.
3. One set of pump and casing wear rings for each size and model of pump unit.
4. One set of pump and motor for each size and model of pumping unit.
5. One dozen fuses for each size of fuse.
6. A printed circuit board for each size and model of the variable frequency drives.

The spare parts shall be delivered to the project site no later than two (2) months prior to pump station start up. Spare parts required during testing and start-up shall be provided by the contractor.

17.14 Electrical Equipment

Electrical systems in the pump station consist of the power supply, power transformers, motor control centers, electric motors, electric variable speed drives, electrical wires and conduits, lighting fixtures, and other associated interface with the instrumentation and control systems.

A. Power Supply

The standard power supply to the pump station shall be 480 volts.

B. Motor Control Centers (MCC)

All motor starters and disconnect switches shall be installed in NEMA 3R Motor Control Centers (MCC). MCC rooms shall be located away from hazardous gas or other corrosive environments. Mechanical ventilation equipment shall be provided to maintain air circulation. All fresh air inlets to the MCC rooms shall be provided with 90 percent efficient inlet filters.

Where environmental problems exist in the pump station location, such as the presence of dust, moisture from sea water, or corrosive gas, the MCC room shall be designed to have adequate ventilation and provided with air cleaning equipment such as de-humidifiers, filters or carbon absorbers.

The MCC circuit breaker handles must be provided with safety interlocks.

C. Electrical Cables and Conduits

All electrical cables and conduits shall be designed in accordance with the NEMA Area Classification as required by the service area. All electrical conduits shall be PVC coated galvanized rigid metallic conduits or Schedule 80 PVC. All conduits shall be sized for 100 year service. Spare conduits may be required. The minimum size conduit shall be 1-inch.

17.15 Instrumentation and Controls

The instrumentation and control system shall be designed to operate the pump station to match the flow characteristics of the service area. The control system shall consist of the wet well level control, flow metering equipment, pressure gages and switches, fire alarms and gas detection instruments.

A. Pump Control System

1. General

The pump control panel (PCP) provides manual or automatic control of the pumps, as well as visual indication of the pump station status and alarm conditions. The following status and alarm indicators are to be provided as a minimum:

Status	Alarms
Power ON Light	Wet Well HIGH LEVEL Alarm Light (from Ultrasonic)
Running Time Meter	Wet Well High High Level Alarm Light
Pump RUN	Pump FAIL Alarm Light
HAND-OFF-AUTO selector switch	Motor winding HIGH TEMP Alarm Light
Lights Test Pushbutton	Seal FAIL Alarm Light (for submersible pumps)
Seal Test Pushbutton (for submersible pumps)	FAIL RESET pushbutton
Flow Rate Indicator	
Wet Well Level Indicator	

Discharge Pressure Indicators

The pump(s) may be controlled either manually, or automatically, depending upon the position of the pump hand-off-auto selector switch. In the MANUAL mode, a pump is started by placing its hand-off-auto selector switch in the HAND position. In this mode, the pump will run continuously unless shut down by the “fail” interlocks.

In the AUTO mode, the pump is started and stopped by the wet well level, as measured by an ultrasonic level sensor. In the “Auto” mode, the pump will run until called to stop by wet well level, unless shut down by the “fail” interlocks.

In the AUTO mode, the pumps will alternate operation automatically after each pump down cycle. If the operating pump should fail, the next pump in the call sequence will start and operate each time the wet well level calls for a pump operation until the failed condition is cleared.

The pump controller shall be a solid state device, which provides operational set points, high level alarm, outputs to start and stop the pumps, and perform pump alternation. The controller shall be a U.S. Filter D153U triplex controller/alternator or approved equal.

A float switch is to be installed in the wet well to provide an emergency high level alarm and a back up pump control system for the station. The emergency high level is to be indicated on the pump control panel and through the dialer. In this condition, the pump will operate for an adjustable time (0-5 minutes after emergency high level initiation), as set by the operator, and then will shut down. If the wet well level again rises to the emergency high level, the cycle will be repeated. The station can run indefinitely in this mode if necessary.

A "pump fail" alarm (for each pump) will be indicated at the pump control panel and transmitted to the automatic dialer system should any of the following conditions occur:

- Pump motor winding high temperature detected by sensors in the motor winding.
- Motor overload detected by the overload relay.

Each of the above "fail" conditions will lock-out the pump from operation. To reset a pump, the operator must visit the station, determine the cause of failure, correct the condition, and depress the "fail reset" pushbutton on the pump control panel.

For submersible pumps, a motor seal failure will also be detected and alarmed but will not stop pump operation.

2. Constant Speed Pump Control System

The operating sequence is applicable for multiple pump units installed in a smaller wet well. The pump station will start in sequence, pumps start and stop in the reverse order.

This sequence is recommended for the following reasons:

a. To maintain uniform flow into the receiving system

b. To provide smaller wet well storage volume and less number of motor starts per hour;

c. To reduce sewer gas emission to the atmosphere by maintaining a constant water level in the wet well.

3. Variable Speed Drives.

Variable speed (matched-flow) pumps shall be used for the following conditions;

a. Where more uniform discharge to the receiving system is required;

b. Where there is not enough space in the pump station to accommodate installation of multiple smaller unit constant speed pumps;

c. Where the wet well volume is limited to satisfy maximum starts per hour;

d. Where sewer gas emissions to the atmosphere should be limited;

The variable speed drive pumps shall be controlled as follows:

a. When the wet well level reaches the first set level, the lead pump will start and ramp to a minimum preset speed. As the flow increases, the pump speed will increase in proportion to the increase in flow in order to maintain the level in the wet well until the pump has reached its maximum speed.

b. When the inflow to the wet well exceeds the maximum capacity of the lead pump, the control system will then start the lag pump. The lag pump will increase its speed while the lead pump will decrease its speed up to the point where the two pumps share the flow, both at the same speed. As the inflow increases, the two pumps will increase their speeds in proportion to the inflow until the pumps have reached the maximum pump design flow, in the case of two pump combination.

c. A drop in wet well level equivalent to a decrease in pump station inflow will signal the pumps to slow down until a preset speed is reached. Then the lag pump will stop, and the lead pump will increase its speed in proportion to the inflow.

d. Further drop in wet well level will signal the lead pump to slow down until the minimum level is reached, at which level, the lead pump will stop.

e. In the event that either the lead pump or the lag pump fails, the wet well level will rise and the standby pump will be started at the same time the failure alarm is activated. The standby pump will be provided with a variable speed drive.

For pump stations equipped with more than two variable speed pumps, the same operating sequence will be followed.

Under no conditions will a force main velocity of less than 3 feet per second shall be allowed.

The variable speed drives shall be provided with bypass contactors to operate the pump at full speed when the VFD is not available.

4. Float Level Switch

The float level switches shall be used to detect the low-low level cut-off and the high-high water level alarm, and as an auxiliary system in the event of failure of the ultrasonic level control systems. When the water level in the wet well reaches the high-high level, the control system (US Filter CBIT B300 single stage controller or approved equal) shall initiate a timed pump down using all pumps. The pump station shall be capable of operating indefinitely in this mode. The float switch shall be direct acting with a single pole mercury switch which activates when the longitudinal axis of the float is horizontal and de-actuates when the liquid level falls 1-inch below the actuation level. The switch shall be encapsulated in a chemical resistant polypropylene casing with a firmly bonded electrical cable protruding. The entire assembly shall be watertight and impact resistant designed and manufactured for Class 1 Division 1, Hazardous Conditions. Float switches shall be Roto-Float as manufactured by Anchor Scientific or approved equal.

Submersible dewatering sump pumps located in dry wells and valve structures shall be controlled by float switches. Float switches shall be designed and manufactured suitable for the area classification of the sump pit.

5. Ultrasonic Level Control

The pump station's primary level controller shall be the ultrasonic level sensor. The transducers shall be hermetically sealed, self cleaning with built-in temperature compensation 6° beam angle, suitable for installation in a sewage pump station wet well.

Ultrasonic measuring systems shall be the Hydroranger with XPS-15 transducer as manufactured by Milltronics, or approved equal.

17.16 Supervisory Control and Data Acquisition (SCADA) System

To monitor and control the operation of the pump station remotely at a central station, SCADA system equipment shall be provided. The system shall consist of the Remote Telemetry Unit (RTU) located in the pump station connected to a computer at a designated central station. The signal to the central station shall be transmitted over spread spectrum radio.

The pump operation is initiated by a motor starter mounted in the Motor Control Center (MCC). The starter is controlled by a signal from the level sensor or push buttons or by local control automation, such as the remote telemetry unit.

The Central Computer System displays information such as graphics and tables; gathers historical data such as trends of pumping cycles, measurement of flows and pressures, equipment running time, number of pump starts per hour; and can remotely control the operation of the pump stations.

17.17 Pressure Gauges

In a wet well-dry well type pump station, pressure gauges shall be installed at the suction and discharge sides of each pump to measure the pump total dynamic head. The pressure gauges shall be at least 4-1/2 inches in diameter. Where seal flushing water is required, a pressure gauge and low pressure switch shall be provided to activate an alarm in case of loss of flushing water. A low flow alarm switch may be used in lieu of the pressure switch.

A pressure switch shall be provided between the pump and the check valve or pump control valve to activate an alarm in the event of failure of the valve to open or accidental closure of any isolation valve located at the pump discharge piping. A micro-switch attached to the valve shaft may be provided in lieu of the pressure switch.

All, pressure gauges and switches installed in a piping system carrying solids bearing fluids such as wastewater, sump pump discharge or chemical lines shall be provided with diaphragm seals and snubbers where pulsating flow is expected. The assembly shall be provided with an isolation ball valve for maintenance. Diaphragm seal material shall be compatible with the pressure and fluid being handled.

In a submersible pump station, a pressure gauge/switch shall be installed in the discharge pipe of each pump in the valve vault upstream of the check valve. The discharge pressures shall be indicated in the pump control panel.

17.18 Pump Station Facility

The pump station facility includes the pump station structure, buildings, electrical substation or transformer, access roads and other appurtenant equipment inside the property. The facility design shall incorporate access road and security. The architectural treatment shall blend with the surrounding area.

A. Building Design and Materials of Construction

The pump station usually consists of an underground concrete structure to house the wet well and the dry well. Where the pump station requires an above ground structure to house the electrical room, generator room, office area and maintenance shop, the above ground building shall be designed in accordance with the requirements of the Uniform Building Code and California Fire Code. In general, all buildings shall be cast-in-place concrete or masonry block wall construction.

Wet Well and Dry Well. The wet well and dry well shall be reinforced cast-in-place concrete with wall thickness to withstand the earth and seismic loads, and shall be heavy enough to resist floatation without earth skin friction resisting the outside surfaces when the wet well is empty.

The size and configuration of the wet well shall be designed in accordance with Section 17.5. The bottom of the wet well shall be sloped to at least 15 degrees and corners grouted to prevent accumulation of solids during operation.

The dry well shall be designed to provide the following:

1. Minimum of 42-inch clear working clearance between pumps and piping;
2. Access doors, stairways and landing;
3. Access opening for equipment installation, maintenance and removal;
4. Hoisting equipment or lifting hooks;
5. Adequate ventilation
6 Fire protection equipment where required.

17.19 Force Mains

The minimum diameter for a force main shall be 4 inches. The capacity of the force main shall be the design peak flow from the pump station. The minimum design velocity for a force main shall be 3.0 fps, and maximum allowed 5.0 fps for PVC and 6.0 fps for DIP.

Force mains shall continuously rise from the pump station to the terminal manhole to eliminate the need for air and vacuum release valves.

For new pump stations with phased development of the tributary area, dual force mains may be required. The District Engineer shall select the number of force mains that will be installed at each pump station.

17.20 Access Roads

Pump stations shall be designed with access roads for construction, operation and maintenance of the equipment. The roads shall have turning radii suitable for the size of vehicle, or heavy hoisting equipment necessary for installation, removal or delivery of equipment or supplies into the station. Pavement sections shall be able to support the load of the heaviest anticipated equipment to be used in the station. Where monorail hoists or traveling cranes are required, adequate headroom clearance shall be provided or loading docks can be used to limit the height of the building.

17.21 Flood Control

The pump stations shall be designed with pad elevation one foot above the expected value100-year flood elevation or the elevations indicated on the Flood Insurance Rate Maps in areas where detailed studies have been conducted, whichever is higher. Where available and current, information contained in the Orange County Public Facilities and Resources Department documents can be used to determine the expected value 100-year flood elevation.

All hydrologic and hydraulic calculations and design shall be in accordance with the standards of the jurisdictional flood control agency standards.

17.22 Grading and Area Drainage

The site drainage shall be designed to prevent standing water or the erosive effects of storm runoff. Pavement areas shall have a positive drain of up to 3%. Flow lines shall have a minimum of 1% slope. Underground structures shall not be constructed in partially cut and partially fill. Where this condition exists, the site shall be over-excavated and re-stabilized. The pump station shall be designed not to float where high groundwater exists.

17.23 Soils Report

A geotechnical investigation shall be conducted to determine the underground soils conditions. The Soils report shall show the foundation design criteria, corrosiveness of soils and ground water, groundwater elevations if it exists, and possible hazardous materials underground. Cleaning of such materials shall be addressed in the construction contract, or can be awarded to a separate hazardous materials contractor as determined by the District Engineer.

17.24 Surveying

The control bench marks shall be referenced from the County of Orange records. Where existing survey and reference plans are available, field check existing data with the current datum and adjust all elevations to current datum where required.. The location of the pump station shall be tied to a nearby street and to an existing property line. Basis of survey bearings and control shall be given if the local coordinate are established.

17.25 Security

The pump station site shall be provided with an 8 foot high chain link fence or masonry block wall fence, as directed by the District Engineer. The fence or wall shall be designed in accordance with applicable American Public Works Association Standards. The entrance gate shall be secured with a padlock. Where the pump station has a superstructure housing the motor control center and the generator, the building shall be equipped with intrusion alarms. Where there is no superstructure, the NEMA 3R enclosure housing the motor control center shall be equipped with an intrusion alarm. The alarms shall be connected to a horn mounted in the building, a red beacon light mounted outside the building or above the NEMA 3R enclosure, and remoted via telemetry to the main control system.

17.26 Water Supply System

The pump station water supply system shall be provided for pump seal water system, irrigation system, rest rooms and housekeeping hose downs. A backflow preventer shall be installed in the pipeline connecting the hose bibs, seal water and irrigation system. Seal water systems shall utilize air gap tanks, and not be directly connected to the water supply system. All piping shall be designed in conformance with the Uniform Plumbing Code.

17.27 Landscaping and Irrigation System

Plants selected shall be drought resistant and approved by the District Engineer. Irrigation system equipment shall utilize water saving kits that are controlled by automatic timers.

17.28 Construction

The pump station shall be constructed in conformance with the specifications and drawings. The pump station construction shall be administered and inspected by the Garden Grove Sanitary District, or its designated representative.

A. Shop Drawing Submittal and Shop Drawing Review

The Technical Specifications shall specify the requirements for shop drawing submittal and review process.

Once the project is awarded, shop drawing submittals shall be reviewed and accepted. The shop drawing review is one way to check compliance with the specifications. It also serves as a mechanism to get from the contractor the equipment as specified. Where a substitution to specified equipment is proposed to the construction project Design Engineer for review, the design project engineer shall be consulted.

B. Equipment Installation and Testing

The equipment installation and testing shall be specified in each equipment specification. Normally, the equipment shall be specified to be installed by the Contractor under the supervision of a certified factory representative. After installation, the Contractor shall conduct trial operation of the equipment, and make the necessary adjustments as required. When the equipment becomes operational, the Contractor shall test the equipment in the presence of the District's representative. The test shall include a performance test, simulating the manual and automatic operation, and checking of other components in compliance with the specifications. The test shall also include verification of all alarm functions. A continuous test using the actual process material shall be conducted without any breakdown prior to final acceptance.

C. Operation and Maintenance Manuals

The Operation and Maintenance Manual shall be prepared by the construction contractor based upon the plans and specifications, and assistance from equipment manufacturers, to clearly describe how the pump station shall operate under normal and emergency conditions, and how it should be maintained.

Final payment shall not be made to the Contractor until the Operation and Maintenance Manual is approved by the District Engineer.

D. Operator Training

Each pump station has unique operational requirements and some have equipment that requires familiarization by the station operators. The Contractor shall provide

training, through respective authorized equipment representatives, to the station operators as specified in the Contract Documents.

18. INSPECTION AND TESTING OF GRAVITY SEWERS

18.01 CCTV Inspection

The Contractor shall perform Closed Circuit Television inspection (CCTV) of all gravity sewers to determine alignment, grade and damaged or defective pipe in place; after the pipe has been installed, backfilled and compacted to grade, tested for leakage, manholes raised to grade, but prior to final resurfacing, from manhole to manhole. CCTV inspection shall be recorded on DVD, and recording procedures shall conform to the requirements of Standard Specifications for Public Works Construction Section 500-1.1.5, Television Inspection, except that the maximum speed shall be 15 feet per minute. The recording shall continuously display the following on-screen data: contract number, project name, date, time, distance (in feet) from the insertion manhole, and manhole identification codes.

Two copies of the recording shall be submitted to the District for approval within two days of the CCTV inspection. CCTV recording shall be performed first with the pipe dry, and then immediately following clean water flowing in the pipe to clearly indicate vertical misalignments, sags or other defects. Should CCTV inspection indicate any faulty installation of the pipe, repairs or replacement shall be made at the Contractor's expense by a method approved by the District. Repaired and or replaced pipe and/or segments shall be retested and reinspected through CCTV at no additional cost to the District, until final acceptance is granted. Any sag greater than 0.25 inch in 100 feet of pipe reach shall be considered excessive, and the pipe shall be removed and reinstalled to proper grade.

18.02 Gravity Pipe Leakage Tests

All gravity sewer pipes and service laterals shall be tested for exfiltration and/or infiltration and deflection. All leakage tests shall be in conformance with Standard Specifications for Public Works Construction (SSPWC), "GREENBOOK" Section 306-1.4.1. Water exfiltration test shall be in conformance with SSPWC Section 306-1-4.2. Air pressure test shall be in conformance with SSPWC 306-1.4.4. All testing shall be performed in the presence of the District Inspector.

18.03 Manhole Leakage Tests

1. Leakage tests shall be made and observed by the District Inspector on each manhole. The test shall be the exfiltration test made as described below:

2. After the manhole has been assembled in place, all lifting holes and those exterior joints within 6 feet of the ground surface shall be filled and pointed with an approved non-shrinking mortar and the lining joints completed. The test shall be made prior to placing the shelf and invert. If the groundwater table has been allowed to rise above the bottom of the manhole, it shall be lowered for the duration of the test. All pipes and other openings into the manhole shall be suitably plugged and the plugs braced to prevent blow out.

3. The manhole shall then be filled with water to the top of the cone section. If the excavation has not been backfilled and observation indicates no visible leakage, that is, no water visibly moving down the surface of the manhole, the manhole may be considered to be satisfactorily water-tight. If the test, as described above is unsatisfactory as determined by the District Inspector, or if the manhole excavation has been backfilled, the test shall be continued. A period of time may be permitted if the Contractor so wishes, to allow for absorption. At the end of this period, the manhole shall be refilled at the top of the cone, if necessary and the measuring time of at least 8 hours begun. At the end of the test period, the manhole shall be refilled to the top of the cone, measuring the volume of water added. This amount shall be extrapolated to a 24-hour rate and the leakage determined on the basis of depth. The leakage for each manhole shall not exceed 1 gallon per vertical foot for a 24-hour period. If the manhole fails this requirement, but the leakage does not exceed 3 gallons per vertical foot per day, repairs by approved methods may be made as directed by the District to bring the leakage within the allowable rate of 1 gallon per foot per day. Leakage due to a defective section or joint or exceeding the 3 gallon per vertical foot per day shall be the cause for the rejection of the manhole. It shall be the Contractor's responsibility to uncover the manhole as necessary and to disassemble, reconstruct or replace it as directed by the District Engineer. The manhole shall then be retested and, if satisfactory, interior joints shall be filled and pointed.

4. No adjustment in the leakage allowance will be made for unknown causes such as leaking plugs, absorptions, etc., i.e., it will be assumed that all loss of water during the test is a result of leaks through the joints or through the concrete. Furthermore, the Contractor shall take all steps necessary to assure the District Inspector that the water table is below the bottom of the manhole throughout the test.

5. If the groundwater table is above the highest joint in the manhole, and if there is no leakage into the manhole as determined by the Engineer, such a test can be used to evaluate the water-tightness of the manhole. However, if the District Engineer is not satisfied, the Contractor shall lower the water table and carry out the test as described herein before.

18.04 Pipe Slope

All gravity sewer pipe shall be laid to the line and grade shown on the plans and per Section 306.1.2 of "GREENBOOK," with a maximum allowable tolerance of 0.125 inch at the invert. The Contractor shall continuously check the grade of the pipe being installed through the use of laser line.

19. STANDARD SEWER NOTES

The following notes must appear on the plans under Standard Sewer Notes.

A. The sewer Contractor shall have a copy of the Project Plans and Specifications, as well as the Garden Grove Sanitary District Design Criteria for Sewer Facilities on the job site.

B. The Contractor shall obtain a City and/or County permit for work done on public right-of-way.

C. The Garden Grove Sanitary District Office shall be called for inspection five (5) working days before start of work at (714) 741-5566.

D. A pre-construction conference shall be held 48 hours before starting construction work.

E. The Contractor shall expose all join points to the existing sewer system for verification of location and elevation before construction.

F. Stations shown as 1+00.00 are sewer stations and are independent of all other stations.

G. All laterals shall be staked by a surveyor before trenching and a complete set of cut sheets shall be supplied to the Contractor and the District Inspector.

H. The District will inspect and test the sewer collection system and lateral sewers to the property clean-out. Privately owned sewer laterals from the property line clean-out will be inspected and tested by an approved contractor subject to the City of Garden Grove Building Department approval.

J. All sewer lines shall be balled in the presence of the District Inspector before completion of all leakage tests.

K. Pipeline leakage tests shall be made in the presence of the District Inspector, only after backfill has been completed, compaction tests on backfill have been made, and the backfill has been accepted by the District Inspector.

L. All sewer main lines shall be inspected using a closed circuit television system. Two recordings shall be made of the inspection on a DVD disk in accordance with the Garden Grove Sanitary District Specifications for Video Inspection of Sewer Lines. One recording shall inspect the system constructed with no flow, and one shall conduct the inspection 15 minutes after flowing water in the sewer.

M. The Contractor shall provide the Garden Grove Sanitary District with an as-built set of job prints with tie-down measurements for all laterals and manholes.

N. Before final acceptance, the developer's engineer signing the plans shall furnish the Garden Grove Sanitary District with a set of as-built mylars of the sewer plan.

O. Curbs, or pavement surfaces in alleys where sewer laterals exist shall be inscribed with an "S" indicating locations of all sewer laterals.

P. Curbs shall be inscribed with ties for all manhole locations.

Add the following notes to plans having <u>on-site</u> work which will be dedicated to the District:

Q. Trench backfill, on all sewer lines to be dedicated to the District, shall be compacted to a minimum of 90% relative density as determined by the five-layer test method (California 216G). Tests will be required every 300-feet of trench or as determined

by the District Inspector. The developer shall submit written results of compaction testing to the District before acceptance. If in dedicated street or future street, compaction will be as required by governmental agency having jurisdiction, but no less than 90 percent relative compaction.

Appendix E-2

Standard Drawings

CITY OF GARDEN GROVE
PUBLIC WORKS STANDARD PLANS

SERIES S-100 SEWER

S-100 MANHOLE DETAILS

S-101 CONCRETE BASE AND JOINT DETAILS

S-102 SEWER DROP MANHOLE WITH CLEANOUT

S-103 MANHOLE FRAME AND COVER

S-104 MANHOLE SHAFT OPENING ORIENTATION PLAN

S-105 LATERAL CLEANOUT DETAIL

S-106 PVC PIPE BEDDING AND MANHOLE CONNECTION DETAILS

S-107 VCP PIPE BEDDING DETAILS

S-108 CONCRETE ENCASEMENT TYPE A, B, & C

S-109 CONCRETE SLOPE ANCHORS

S-110 STEEL CASING PIPE

S-111 VCP OR PVC TYPICAL LATERAL

S-112 CUT IN WYE CONNECTION

S-113 PVC MANHOLE LINER

S-114 PVC T-LOCK LINER DETAILS

S-115 PVC LINER WITH GAS FLAP INSTALLATION

S-116 FLAT TOP MANHOLE

S-117 TYPICAL GREASE INTERCEPTOR

S-118 DESIGN CRITERIA FOR SEPARATION OF WATER AND SEWER MAINS

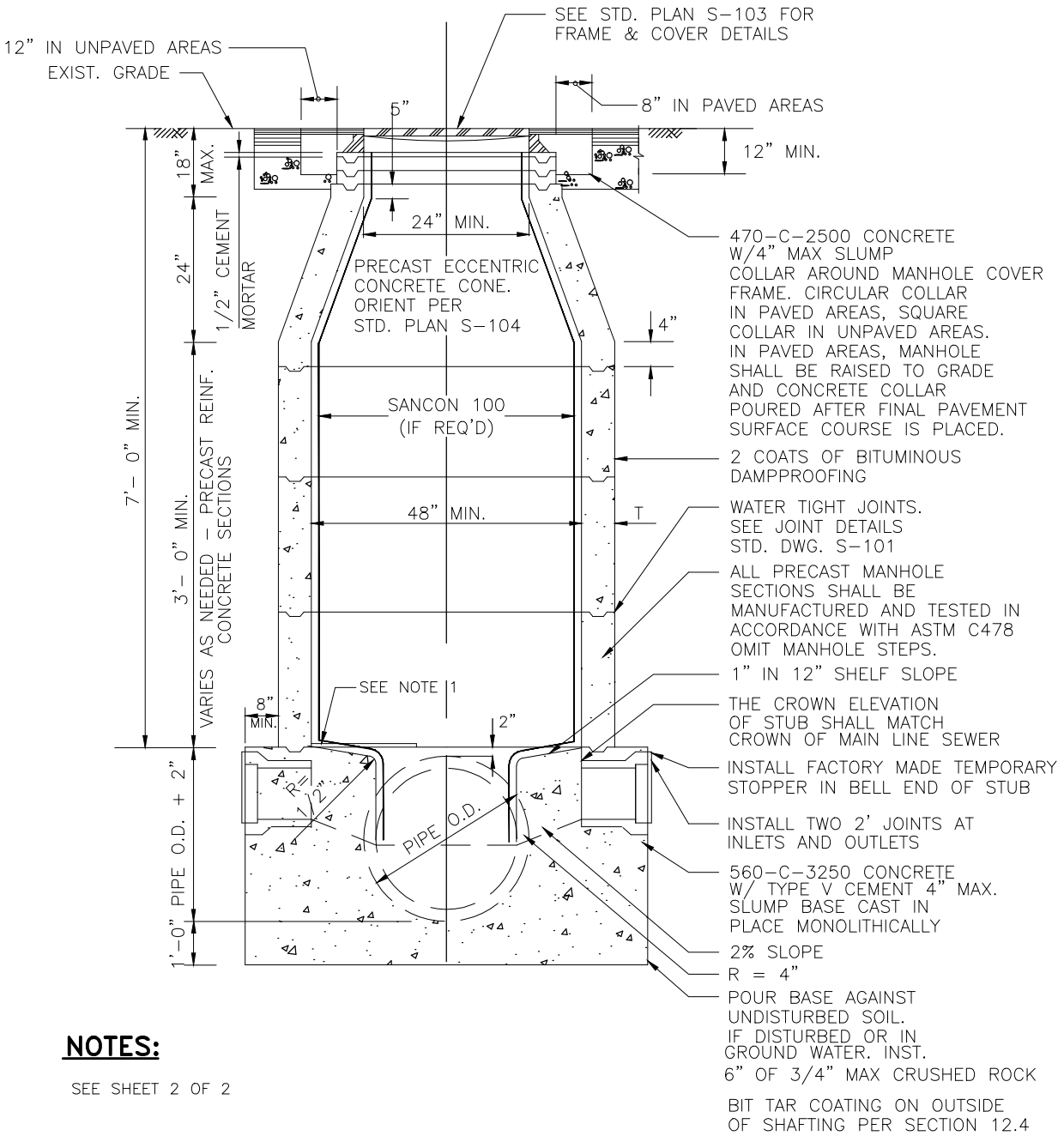

NOTES:

SEE SHEET 2 OF 2

Garden Grove Sanitary District

MANHOLE DETAILS

Approved _____ Date 12-8-15

City Engineer R.C.E. 52125 Exp.12-31-16

REVISIONS	BY	DATE

STD. PLAN NUMBER

S-100

SHEET 1 OF 2

MANHOLE DETAILS NOTES:

1. PLACE TWO HALF MOON SHAPED TEMPORARY PLYWOOD COVERS (5/8" THICK MINIMUM) IN BOTTOM OF MANHOLE AFTER SHAFTS HAVE BEEN SET TO KEEP DEBRIS FROM ENTERING SEWER.
2. FOR DROP MANHOLE SEE STD. PLAN. S-103.
3. FOR MANHOLES LOCATED OUTSIDE PAVED AREAS, THE FRAME AND COVER SHALL BE SET A MINIMUM OF 0.1 FT. ABOVE FINISH GRADE IN SHOULDER AREAS, UNPAVED ROADS OR LANDSCAPING AREAS, AND 18" IN UNFINISHED AREAS.
4. ALL INLETS AND OUTLETS SHALL BE SUPPORTED WITH CONCRETE SUPPORTS PRIOR TO POURING MANHOLE BASE.
5. MANHOLE LOCATIONS SHALL BE MARKED ON CURB FACE.
6. WALL THICKNESS (T) SHALL BE MINIMUM 5" FOR 48" MANHOLES, 6" FOR 60" MANHOLES, 7" FOR 72" MANHOLES.
7. SIDES OF BASE SHALL BE EITHER FORMED OR POURED AGAINST VERTICAL SMOOTH EARTH.
8. WHEN DEPTH OF MANHOLE EXCEEDS 15 FEET FROM TOP OF PIPE TO FINISH GRADE, MANHOLE SHAFT SHALL BE INCREASED TO 60 INCH DIAMETER.
9. A PLASTIC SIGN SHALL BE ATTACHED 12 INCHES BELOW THE TOP OF MANHOLE FRAME WITH INSCRIPTION:

   CAUTION
   PERMIT REQUIRED CONFINED SPACE
   VENTILATE BEFORE ENTERING

   IN LETTERS NO SMALLER THAN ½ INCH IN HEIGHT. ATTACH SIGN TO MANHOLE WALL WITH A MINIMUM OF 4 TYPE 316 STAINLESS STEEL SCREWS AND ANCHORS.
10. DIAMETER OF MANHOLE PER SIZE OF SEWER LINE.

SEWER MAIN (INCHES)	MAXIMUM BRANCH SIZE (INCHES)	MANHOLE SIZE (INCHES)	FRAME AND COVER (INCHES)
8-15	10	48	24
18-21	12	60	30
24-36	15	72	36

Garden Grove Sanitary District

MANHOLE DETAILS

Approved _____ Date 12-8-15

City Engineer R.C.E. 52125 Exp.12-31-16

REVISIONS	BY	DATE

STD. PLAN NUMBER

S-100

SHEET 2 OF 2

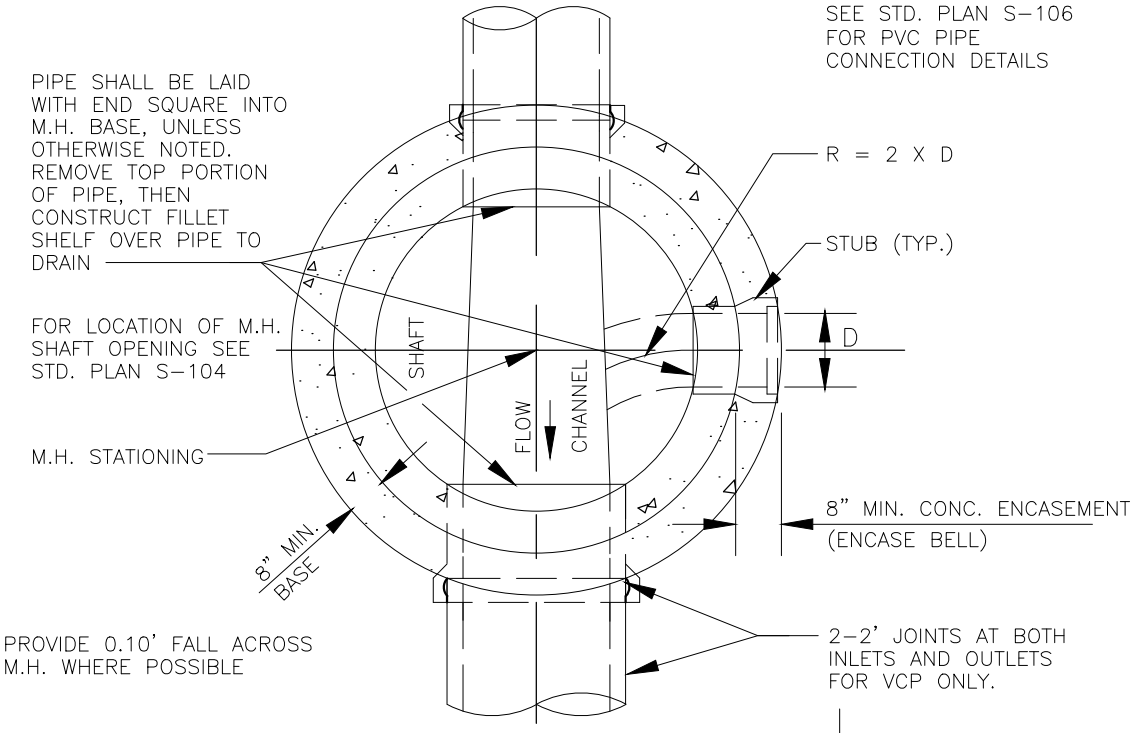

PLAN

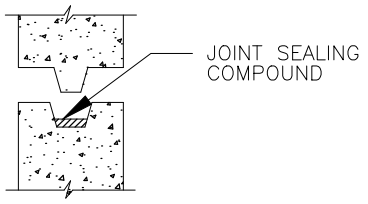

PLASTIC JOINT

REQ. IN GROUNDWATER

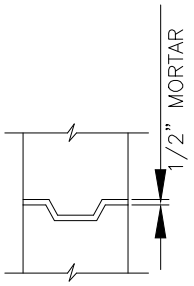

MORTAR JOINT

NOTES:

1. MORTAR JOINTS – SUFFICIENT MORTAR SHALL BE APPLIED ACROSS ENTIRE FACE OF JOINT SO THAT WHEN PRECAST UNITS ARE PLACED ON TOP OF ONE ANOTHER, THE MORTAR WILL SQUEEZE OUT BOTH THE INSIDE AND OUTSIDE WALL FACES. JOINTS SHALL BE "POINTED UP" AFTER SETTING PRECAST UNITS EXCLUDING GRADE RINGS.
2. PLASTIC JOINTS – PERFORMED COLD-APPLIED READY-TO-USE PLASTIC JOINT SEALING COMPOUND SHALL BE QUICK-SEAL AS SUPPLIED BY QUIKSET UTILITY VAULTS OR APPROVED EQUAL MUST BE USED WHEN GROUND WATER IS ENCOUNTERED.

Garden Grove Sanitary District

CONCRETE BASE AND JOINT DETAILS

Approved _____ Date 12-8-15

City Engineer R.C.E. 52125 Exp.12-31-16

REVISIONS	BY	DATE

STD. PLAN NUMBER

S-101

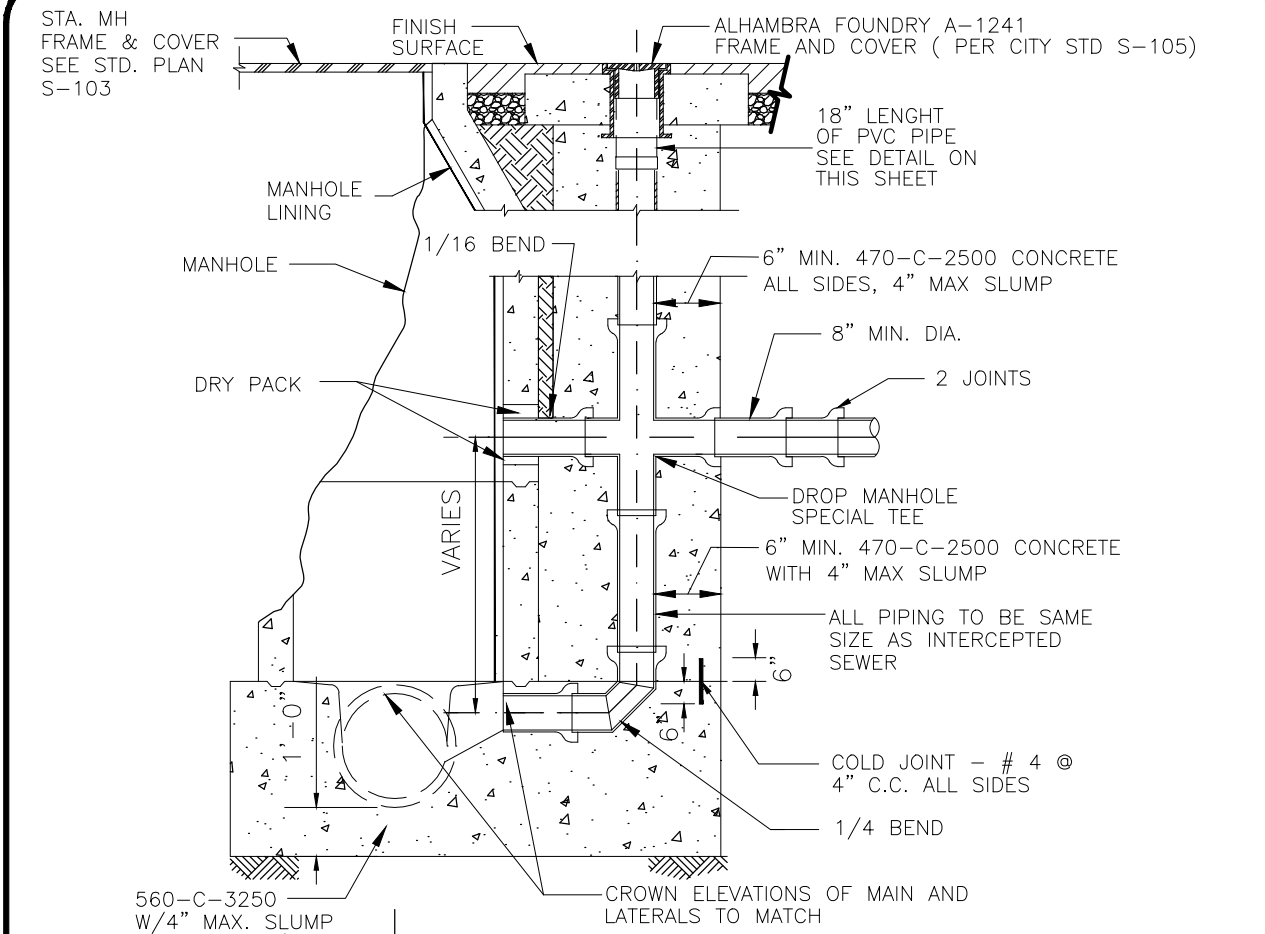

NOTES:

1. DROP MANHOLE TO BE USED FOR SPECIAL SITUATIONS ONLY, AND SHALL NOT BE CONSTRUCTED WITHOUT APPROVAL BY GGSD.
2. ALL NEW OPENINGS CONSTRUCTED INTO MANHOLE SHALL BE DONE BY CORE DRILLING.

Garden Grove Sanitary District

SEWER DROP MANHOLE WITH CLEANOUT

Approved _____ Date 12-8-15

City Engineer R.C.E. 52125 Exp.12-31-16

REVISIONS	BY	DATE

STD. PLAN NUMBER

S-102

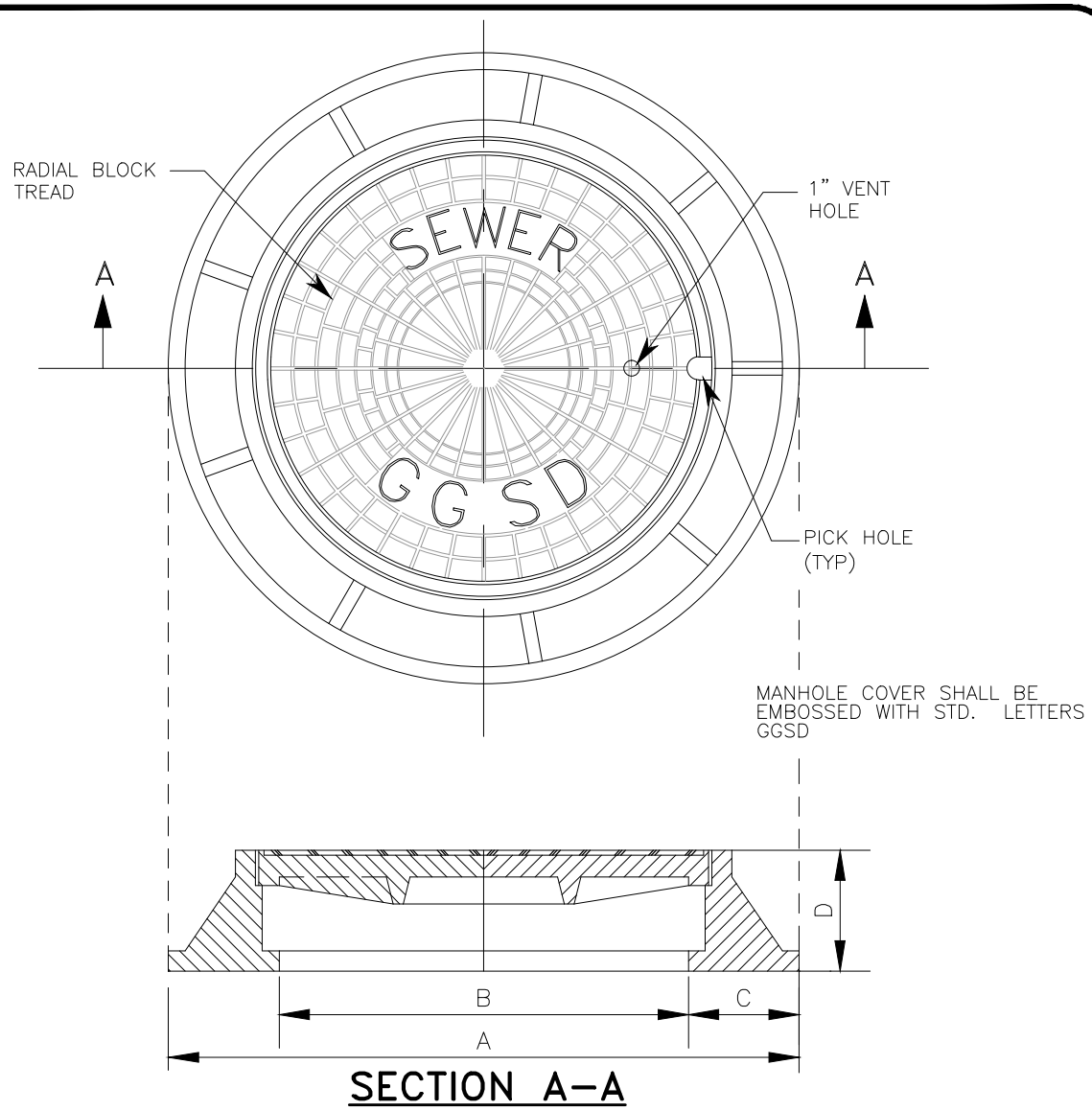

SECTION A–A

MANHOLE SIZE	A	B	C	D	PLATE NUMBER
48"	32 1/2"	24	4 ¼	6	A–1495
60"	38 1/2"	30	4 ¼	6	A–1497
72"	44 1/2"	36	4 ¼	6	A–1498

NOTES:

1. WHERE FRAME AND COVER ARE SET 18" ABOVE GRADE, FOUR (4) ½" DIA. INSERTS FOR ADJUSTABLE STUDS SHALL BE CAST IN TOP GRADE RING, FRAME SHALL BE BOLTED TO GRADE RING.
2. MANHOLE COVER AND FRAME SHALL BE AS MANUFACTURED BY ALHAMBRA FOUNDRY. FRAME AND COVER SHALL BE COATED WITH ASPHALT OR COAL TAR.

Garden Grove Sanitary District

MANHOLE FRAME AND COVER (TRAFFIC LOADING)

Approved _____ Date 12–8–15

City Engineer R.C.E. 52125 Exp.12–31–16

REVISIONS	BY	DATE

STD. PLAN NUMBER

S–103

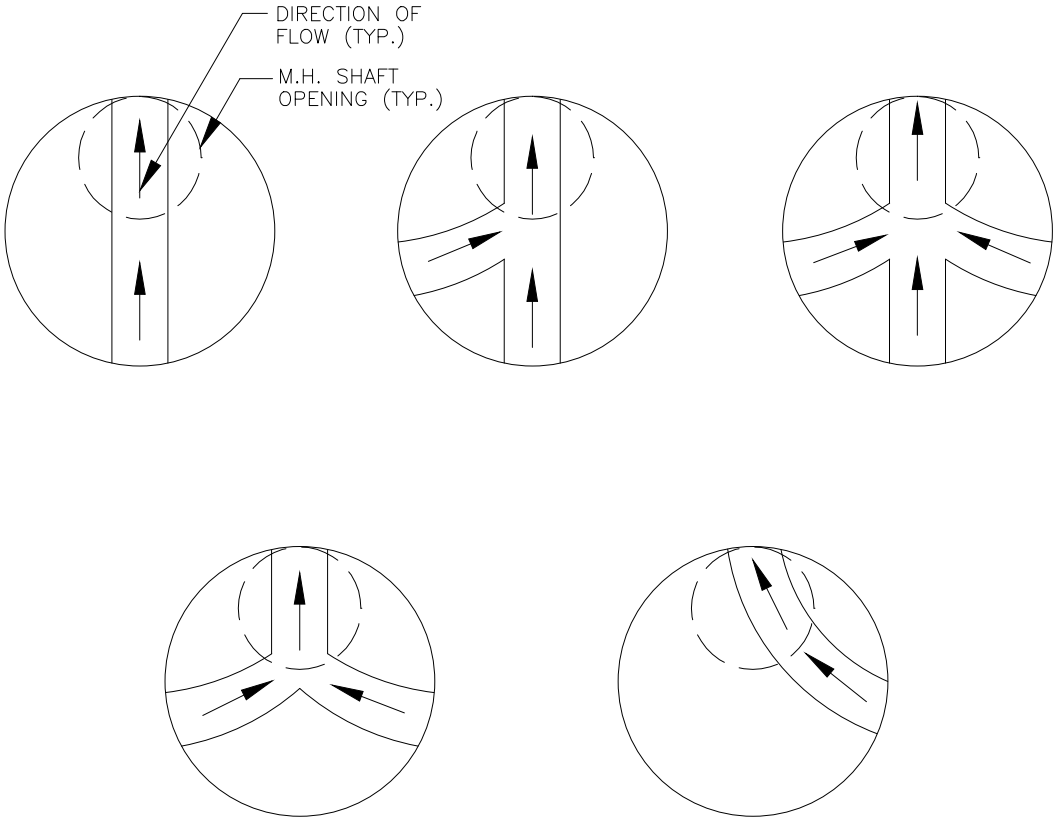

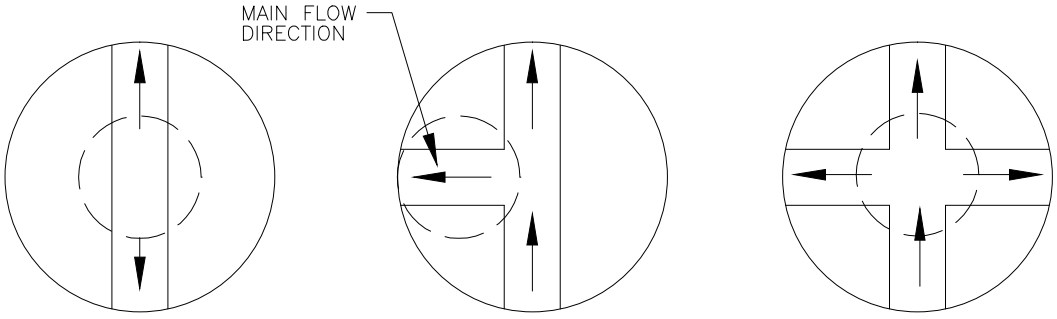

SUMMIT M.H. EITHER SIDE

SUMMIT M.H.

SUMMIT M.H. ANY POSITION

Garden Grove Sanitary District

MANHOLE SHAFT OPENING ORIENTATION PLAN

Approved _____ Date 12-8-15

City Engineer R.C.E. 52125 Exp.12-31-16

REVISIONS	BY	DATE

STD. PLAN NUMBER

S-104

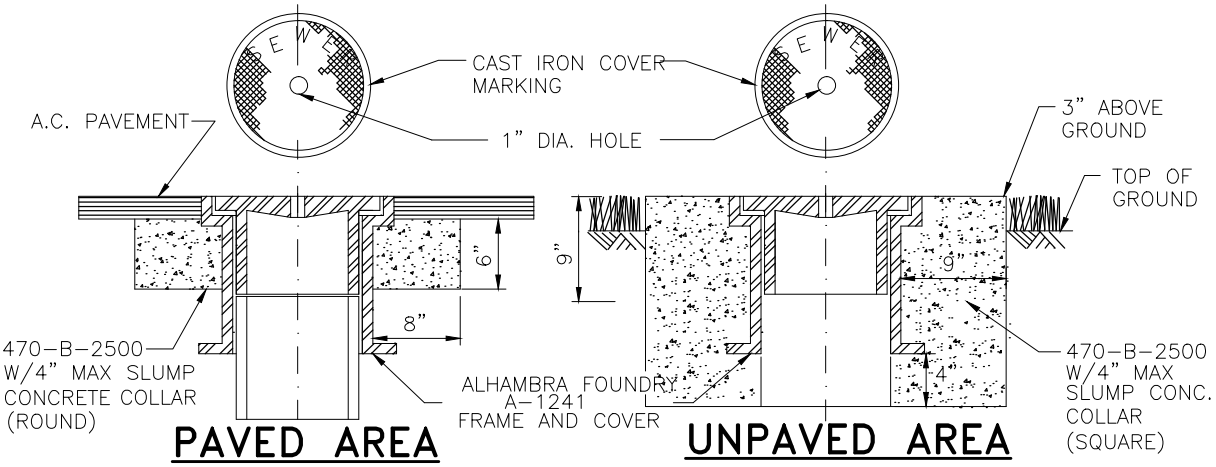

PAVED AREA

UNPAVED AREA

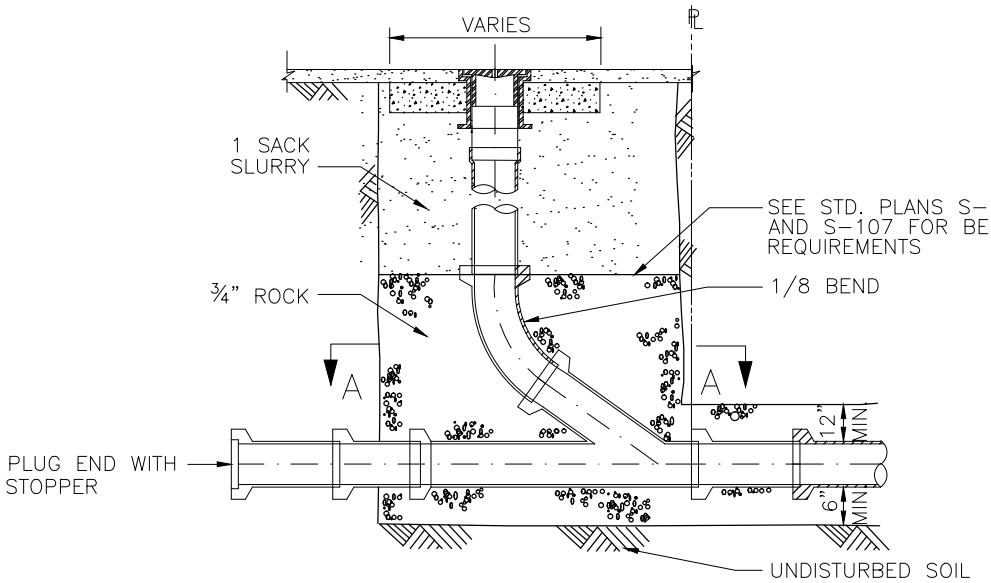

ELEVATION

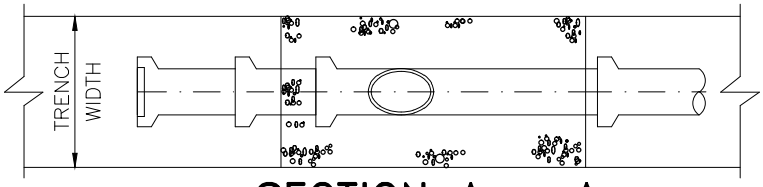

SECTION A – A

NOTES:

1. CLEANOUT PIPE TO BE SAME SIZE AND KIND OF MATERIAL AS LATERAL.
2. CLEANOUTS TO BE INSTALLED WITHIN 5' OF BUILDING, DIRECTION CHANGES. MAXIMUM 75' INTERVALS AND AT PROPERTY LINE.

Garden Grove Sanitary District

LATERAL CLEANOUT DETAIL

Approved _____ Date 12-8-15

City Engineer R.C.E. 52125 Exp.12-31-16

REVISIONS	BY	DATE

STD. PLAN NUMBER

S-105

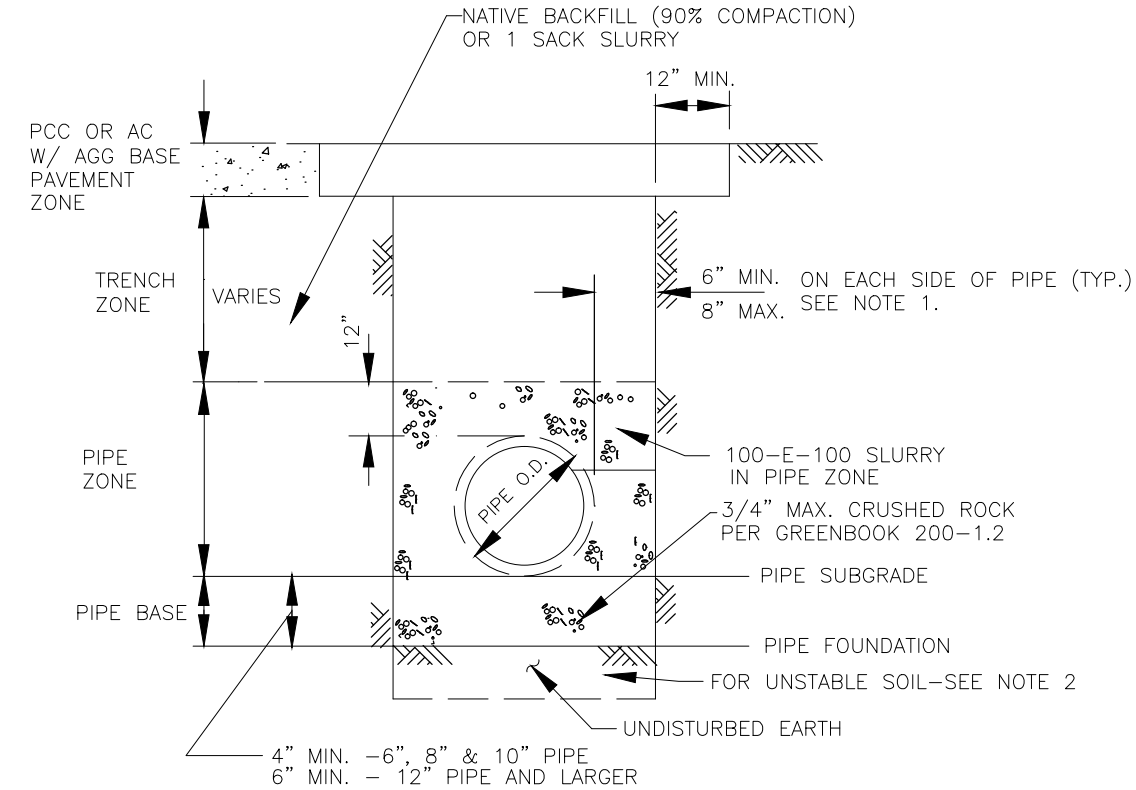

NORMAL BEDDING

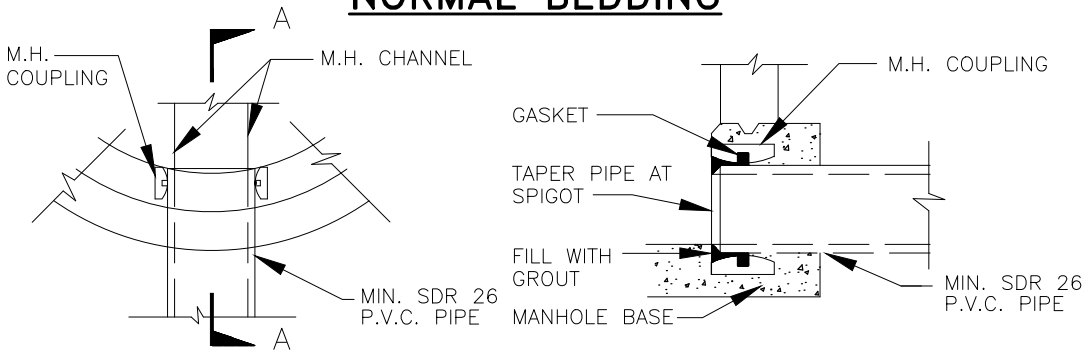

PLAN **SECTION A – A**

PVC PIPE MANHOLE CONNECTION DETAILS

NOTES:

1. CONCRETE ENCASEMENT PER STD. DWG. S-108 SHALL BE USED WHERE THE TRENCH WIDTH AT THE UPPER LIMIT OF THE PIPE ZONE EXCEEDS THE MAXIMUM WIDTH SPECIFIED ABOVE.
2. IF UNSTABLE SOIL IS ENCOUNTERED, DISTRICT REPRESENTATIVE SHALL DETERMINE DEPTH OF REMOVAL AND THICKNESS OF FOUNDATION ROCK REFILL MATERIAL.
3. SEE STD. PLANS S-101 AND S-102 FOR MANHOLE DETAILS.

Garden Grove Sanitary District

P.V.C. PIPE BEDDING & MANHOLE CONNECTION DETAILS

Approved _____ Date 12-8-15

City Engineer R.C.E. 52125 Exp.12-31-16

REVISIONS	BY	DATE

STD. PLAN NUMBER

S-106

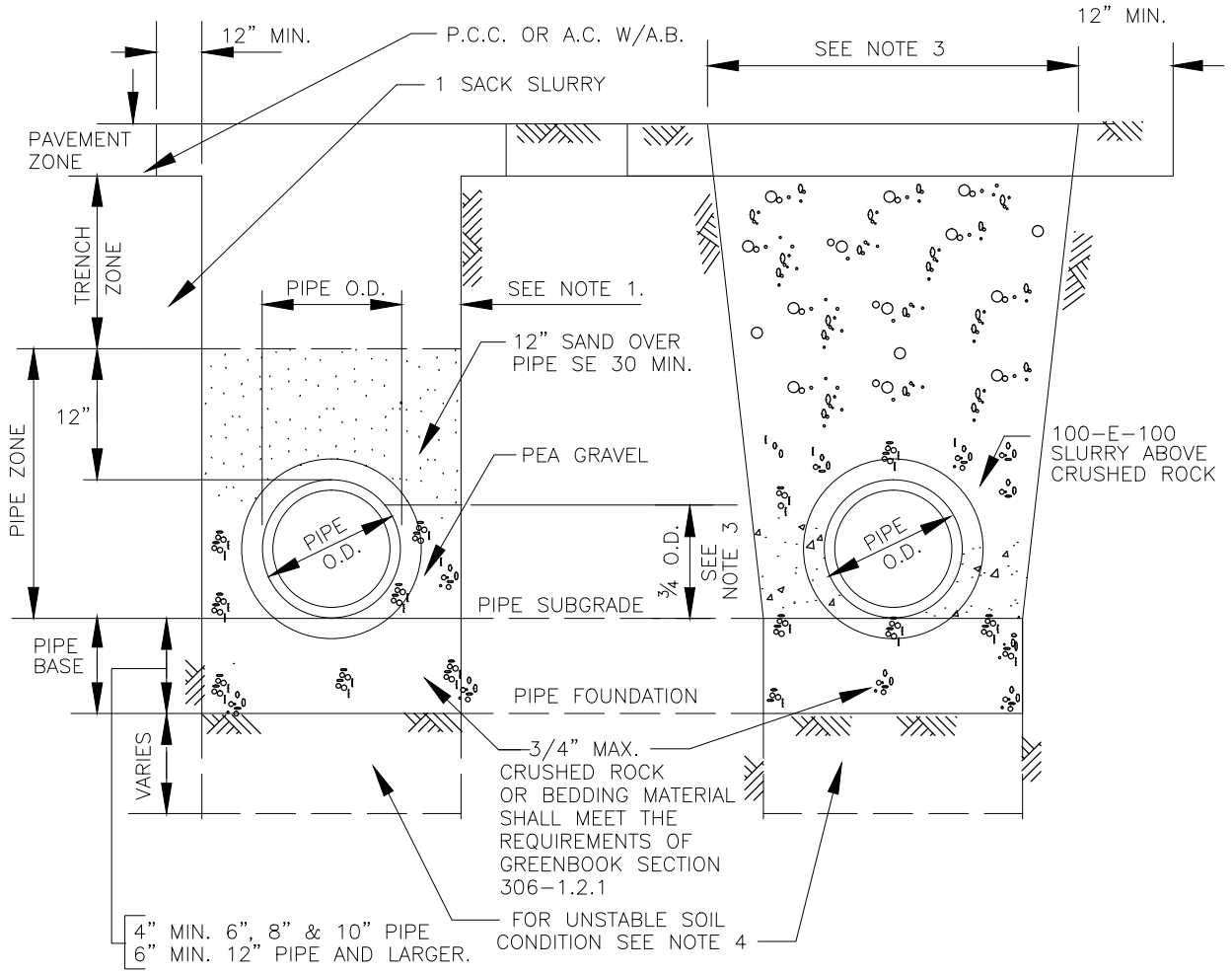

TYPICAL NORMAL BEDDING

OVERWIDTH BEDDING

SEE NOTE 2

NOTES:

1. TRENCH WIDTH AT THE UPPER LIMIT OF THE PIPE ZONE SHALL BE WITHIN THE FOLLOWING LIMIT FOR TYPICAL NORMAL BEDDING.
   (A) MAXIMUM TRENCH WIDTH–O.D. PIPE OR BELL PLUS 8" MAX. EACH SIDE OF PIPE.
   (B) MINIMUM TRENCH WIDTH–O.D. PIPE OR BELL PLUS 6" MIN. EACH SIDE OF PIPE.
2. OVERWIDTH BEDDING SHALL BE USED WHERE THE TRENCH WIDTH AT THE UPPER LIMIT OF THE PIPE ZONE EXCEEDS THE MAXIMUM WIDTH SPECIFIED ABOVE.
3. MAXIMUM OVERWIDTH BEDDING TO BE DETEMINED IN FIELD BY THE DISTRICT REPRESENTATIVE ON THE BASIS OF OVERWIDTH EXCAVATED.
4. IF UNSTABLE SOIL IS ENCOUNTERED, DISTRICT REPRESENTATIVE SHALL DETERMINE DEPTH OF REMOVAL AND SIZE OF FOUNDATION ROCK REFILL MATERIAL.

Garden Grove Sanitary District

V.C.P. PIPE BEDDING DETAILS

Approved Date 12-8-15

City Engineer R.C.E. 52125 Exp.12-31-16

REVISIONS	BY	DATE

STD. PLAN NUMBER

S-107

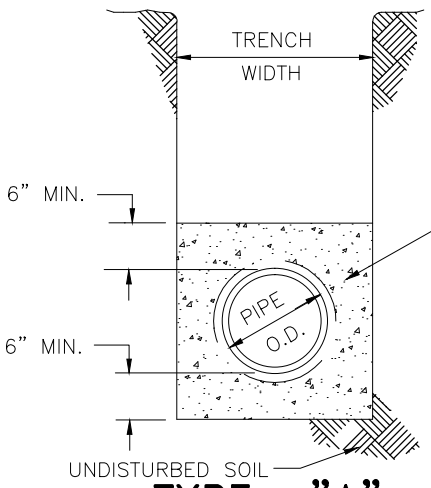

TYPE "A"

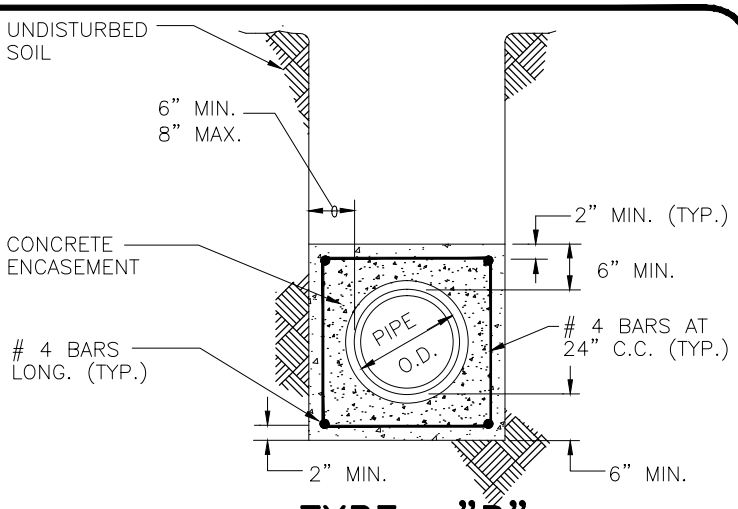

TYPE "B"

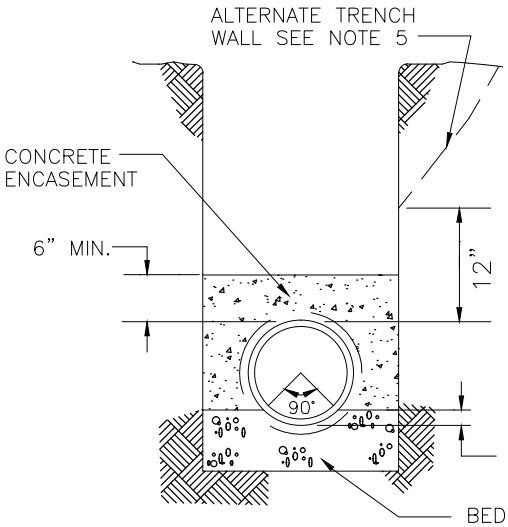

TYPE "C"

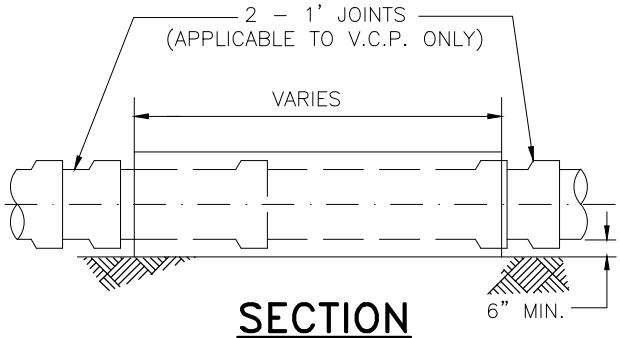

SECTION

NOTES:

1. CONCRETE ENCASEMENT SHALL BE USED WHEN COVER IS UNDER 4' OR OVER 20'.
2. ENCASEMENT TO BE PLACED AGAINST UNDISTURBED NATURAL GROUND OR FILL COMPACTED TO 90% RELATIVE DENSITY.
3. NO. 4 GRADE 60 STEEL REINFORCING BARS SHALL BE PLACED AS SHOWN.
4. TYPE OF CONCRETE ENCASEMENT TO BE USED SHALL BE SHOWN ON PLANS OR AS SPECIFIED BY DISTRICT REPRESENTATIVE TO MEET UNFORESEEN FIELD CONDITIONS. UNLESS NOTED OTHERWISE, ENCASEMENT SHALL BE 470-C-2500 WITH 4" MAX. SLUMP.
5. WHERE SLOPED TRENCHES ARE USED, WALLS WILL NOT BEGIN TO SLOPE CLOSER THAN 12" FROM THE TOP OF THE PIPE.

Garden Grove Sanitary District

CONCRETE ENCASEMENT TYPE A, B, & C

Approved _____ Date 12-8-15

City Engineer R.C.E. 52125 Exp.12-31-16

REVISIONS	BY	DATE

STD. PLAN NUMBER

S-108

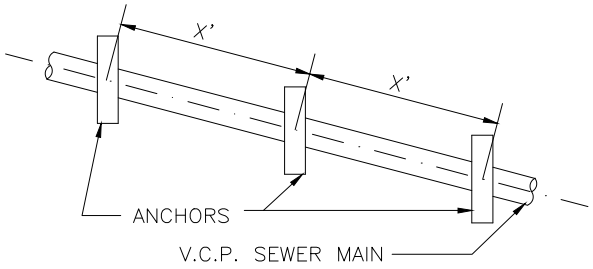

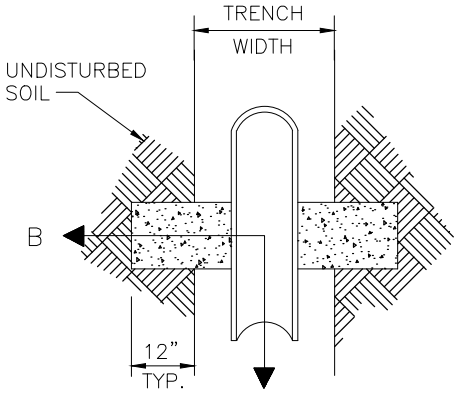

SECTION A–A

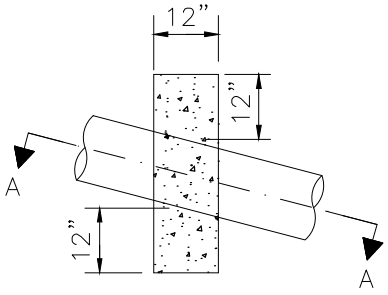

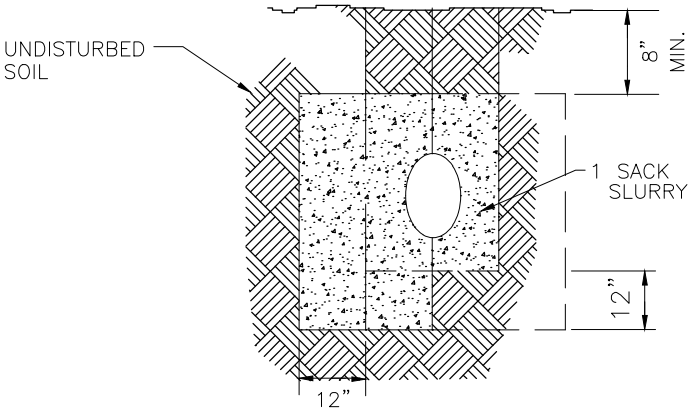

SECTION B–B

PIPE SLOPE	PIPE SLOPE	X DISTANCE
100%	1:1	12'
66.6%	1–1/2:1	14'
50%	2:1	16'
40%	2–1/2:1	18'
33.3%	3:1	20'

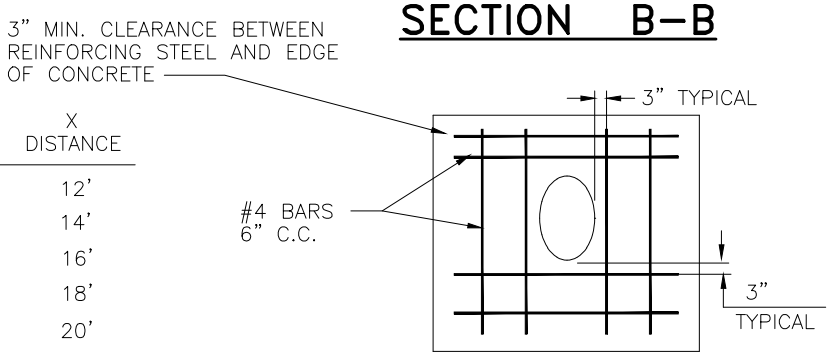

REINFORCING STEEL PATTERN

NOTES:

1. SLOPES GREATER THAN 10% SHALL BE USED BY SPECIAL WRITTEN APPROVAL OF CITY.
2. PIPE ANCHORS REQUIRED ON ALL SLOPES OF 3:1 OR STEEPER.
3. ANCHOR SHALL EXTEND 12" INTO NATURAL UNDISTURBED SOIL.
4. CONCRETE SHALL BE 560–C–3250 W/4" MAX. SLUMP.
5. ANCHORS FOR TRAPAZOIDAL TRENCH SECTIONS WILL CONFORM TO TO TRENCH CROSS SECTION AND EXTEND 12" INTO UNDISTURBED SOIL.

Garden Grove Sanitary District

CONCRETE SLOPE ANCHORS

Approved _____ Date 12–8–15

City Engineer R.C.E. 52125 Exp.12–31–16

REVISIONS	BY	DATE

STD. PLAN NUMBER

S–109

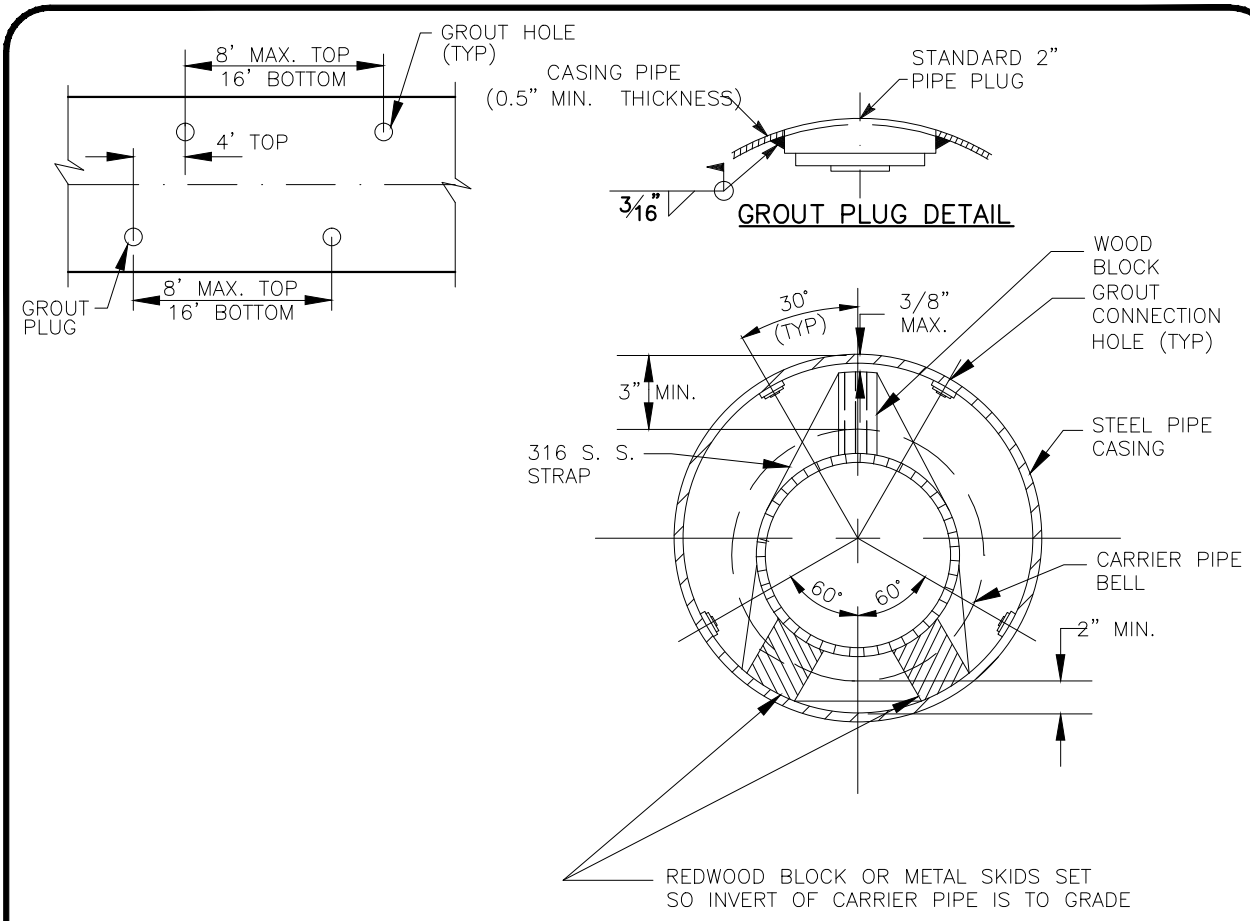

CASING DETAIL

NOTES:

1. UNLESS NOTED OTHERWISE, CASING SHALL BE INSTALLED BY THE JACK AND BORE, AND/OR TUNNEL METHOD. IF OPEN-CUT INSTALLATION OF CASING IS ALLOWED, BACKFILL SHALL BE IN ACCORDANCE WITH STD. PLAN S-106 OR S-107
2. MINIMUM CASING SIZE SHALL BE 24" AND MINIMUM CASING THICKNESS SHALL BE 5/16".
3. ALL STEEL CASING PIPE FIELD JOINTS SHALL BE WELDED FULL-CIRCUMFERENCE.
4. UNFINISHED REDWOOD SKIDS SHALL BE PROVIDED PER DETAIL ABOVE.
5. CARRIER PIPE SHALL BE AIR PRESSURE TESTED PRIOR TO FILLING OF ANNULAR SPACE.
6. UPSTREAM AND DOWNSTREAM ELEVATIONS OF CARRIER PIPE SHALL BE VERIFIED PRIOR TO FILLING OF ANNULAR SPACE.
7. EACH END OF CASING SHALL BE SEALED WITH CONCRETE MORTAR, OR MANUFACTURED CASING END COVER.
8. PERIPHERY OF CASING SHALL BE PRESSURE GROUTED.
9. ANNULAR SPACE SHALL BE FILLED WITH LEAN GROUT.
10. FOR REDWOOD BLOCKS, 3' LONG SKIDS BEVELED AT BOTH ENDS SHALL BE STRAPPED IN PLACE 3" FROM EACH JOINT OF PIPE, NOTCH SKID SET TO SEAT STRAP.

Garden Grove Sanitary District

STEEL CASING PIPE

Approved _____ Date 12-8-15

City Engineer R.C.E. 52125 Exp.12-31-16

REVISIONS	BY	DATE

STD. PLAN NUMBER

S-110

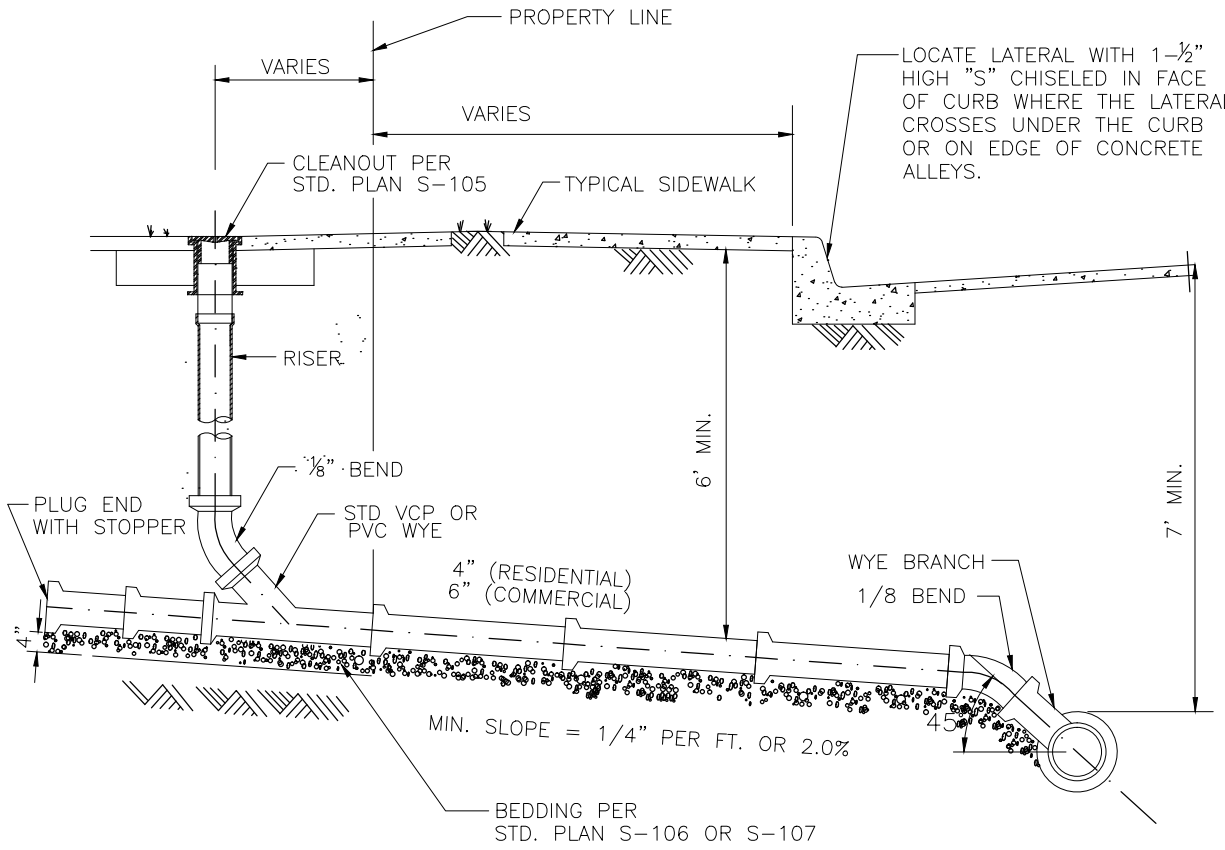

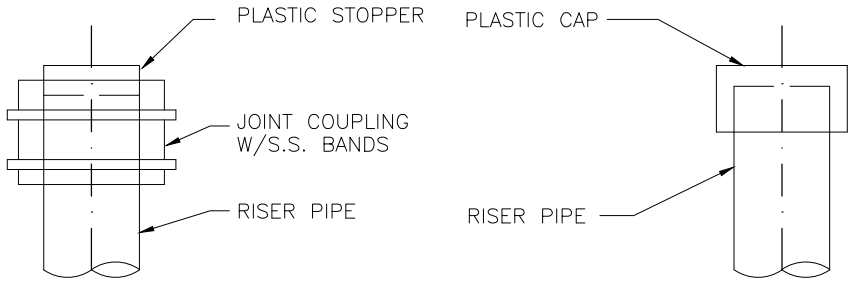

OPTIONAL STOPPER DETAILS

NOTES:

1. LATERAL SIZE TO BE DETERMINED ON THE BASIS OF TOTAL NUMBER OF FIXTURE UNITS DRAINED, BUT IN NO CASE SHALL THE LATERAL DIAMETER BE LESS THAN FOUR INCHES FOR SINGLE OR MULTIPLE FAMILY RESIDENTIAL AND SIX INCHES FOR COMMERCIAL OR INDUSTRIAL LAND USES.
2. LATERAL TO BE INSTALLED TO PROPERTY LINE.
3. IF LATERAL NOT BUILT, PLUG WYE BRANCH WITH STOPPER.
4. IF RISER NOT BUILT, PLUG LATERAL AT ℄ .

Garden Grove Sanitary District

V.C.P. OR P.V.C. TYPICAL LATERAL

Approved _____ Date 12–8–15

City Engineer R.C.E. 52125 Exp.12–31–16

REVISIONS	BY	DATE

STD. PLAN NUMBER

S–111

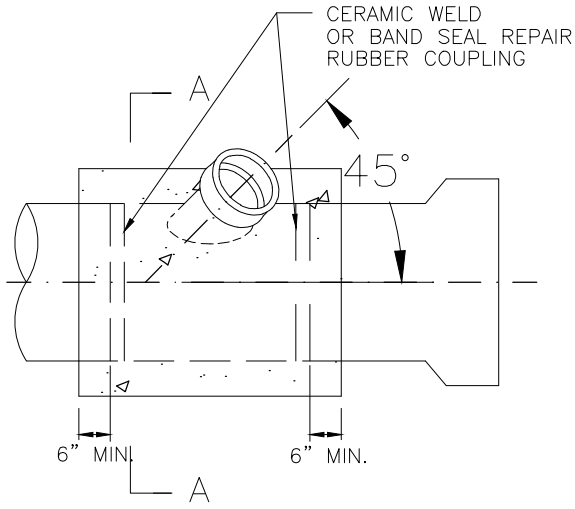

CUT IN WYE

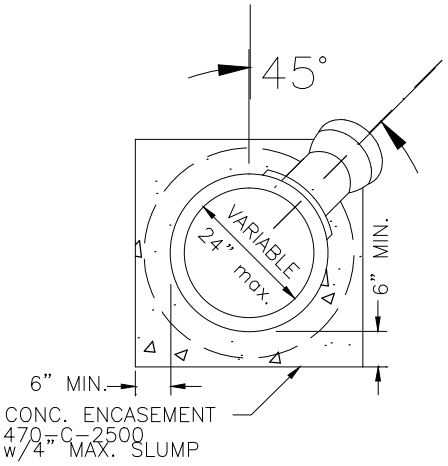

SECTION A–A

NOTES:

1. THE SADDLE CONNECTION SHALL BE SECURED WITH 470–C–2500 W/4" MAX SLUMP CONCRETE ENCASEMENT AFTER THE CONNECTION IS APPROVED BY THE DISTRICT REPRESENTATIVE.
2. ALL CHIPS, DIRT, EPOXY, MORTAR, AND CONCRETE SHALL BE KEPT OUT OF THE SEWER.
3. DAMAGED PIPE SHALL BE REPLACED.
4. 8" AND LARGER CONNECTIONS SHALL BE BY STANDARD OR DROP MANHOLES.

Garden Grove Sanitary District

CUT IN WYE CONNECTION

Approved _____ Date 12–8–15

City Engineer R.C.E. 52125 Exp.12–31–16

REVISIONS	BY	DATE

STD. PLAN NUMBER

S–112

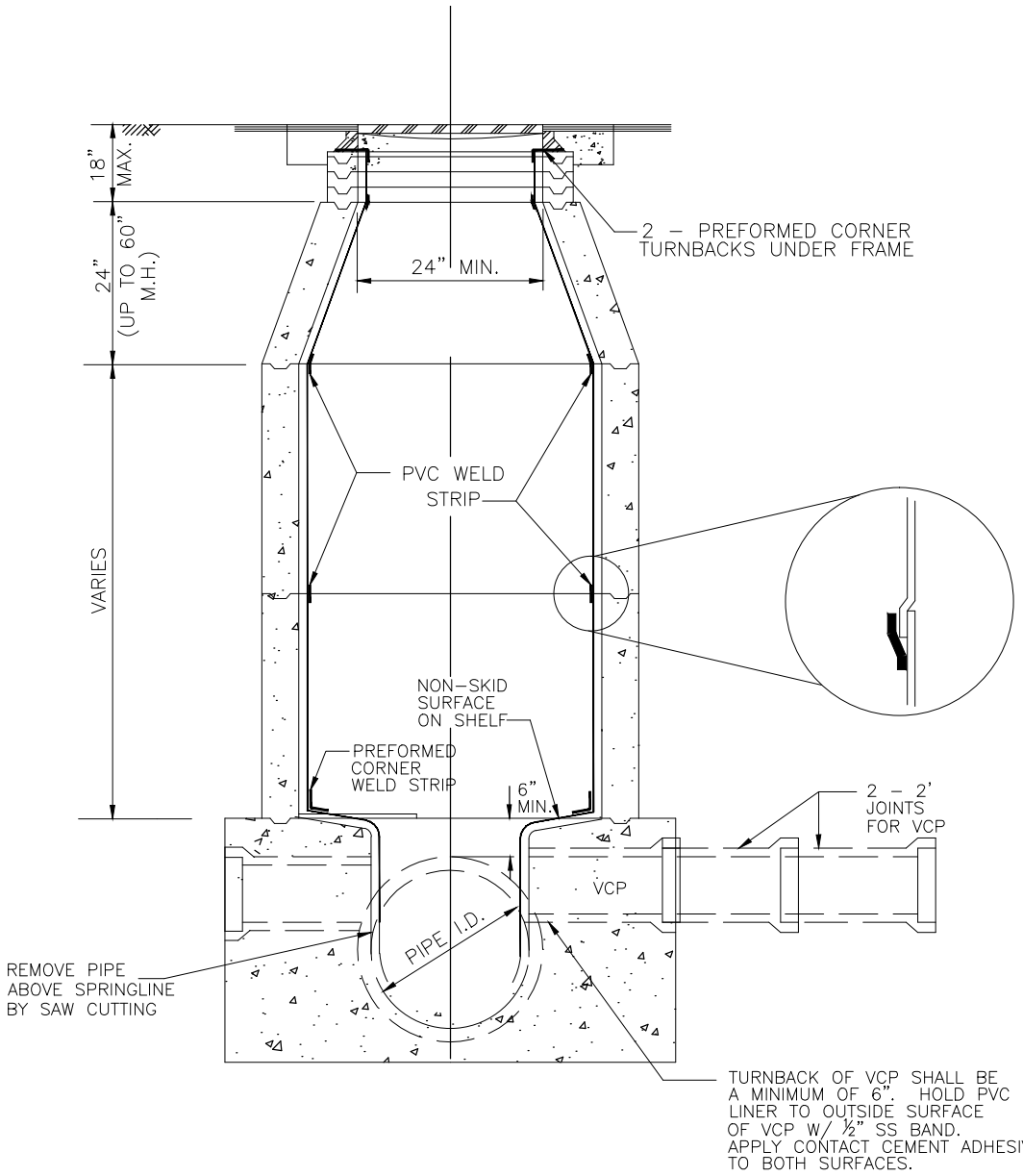

SEE STD. PLANS S–101, S–102, S–103

Garden Grove Sanitary District

PVC MANHOLE LINER

Approved _____ Date 12–8–15

City Engineer R.C.E. 52125 Exp.12–31–16

REVISIONS	BY	DATE

STD. PLAN NUMBER

S–113

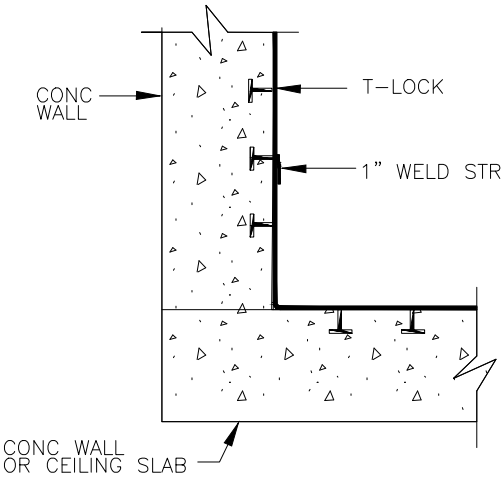

CORNER

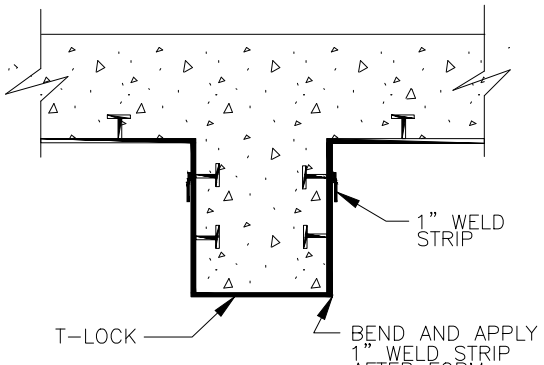

BEAM

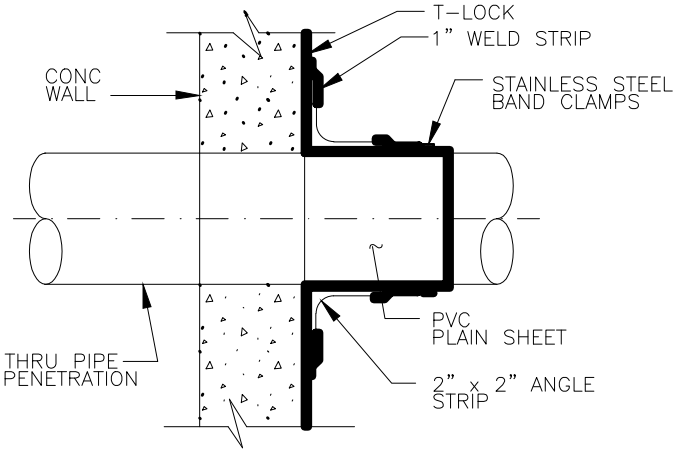

PIPE PENETRATION

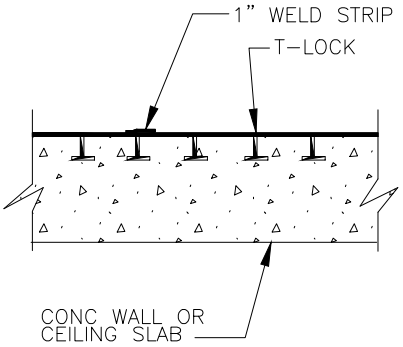

SPLICE

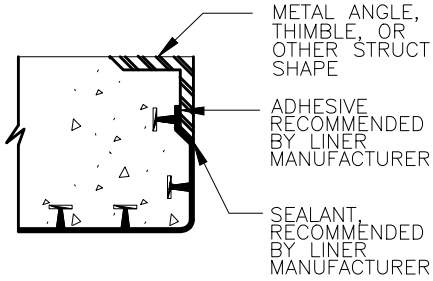

METAL EMBED

NOTE

1. AT BUTT JOINTS, INSTALL 1" WELD STRIP ON FRONT AND BACK.
2. LINER RIBS SHALL BE ORIENTED VERTICALLY ON VERTICAL SURFACES.

Garden Grove Sanitary District

P.V.C. T-LOCK LINER DETAILS

Approved _____ Date 12-8-15

City Engineer R.C.E. 52125 Exp.12-31-16

REVISIONS	BY	DATE

STD. PLAN NUMBER

S-114

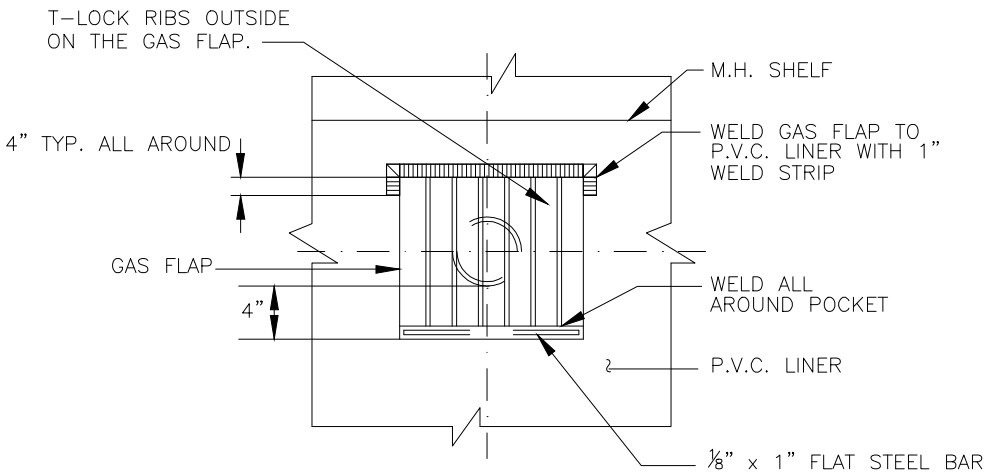

VIEW A-A

NOT TO SCALE

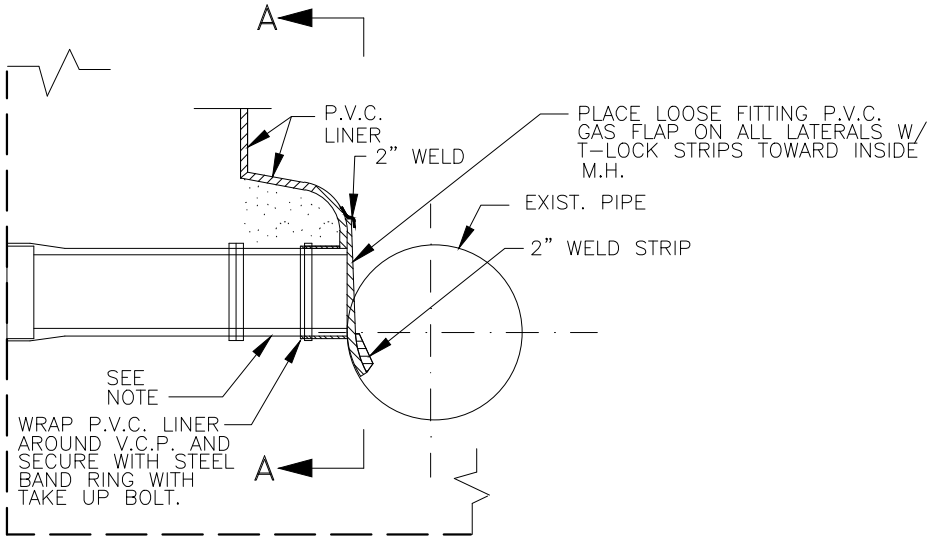

PLAN

NOTE

FOR INSTALLATION AT EXISTING M.H., REMOVE INTERFERING CONCRETE AT END OF EACH LATERAL AND EXTEND VCP AS SHOWN. GROUT IN PLACE. EXTEND PVC M.H. LINER OVER GROUT AND INSTALL GAS FLAP AS SHOWN.

Garden Grove Sanitary District

P.V.C. LINER WITH GAS FLAP INSTALLATION

Approved _____ Date 12-8-15

City Engineer R.C.E. 52125 Exp.12-31-16

REVISIONS	BY	DATE

STD. PLAN NUMBER

S-115

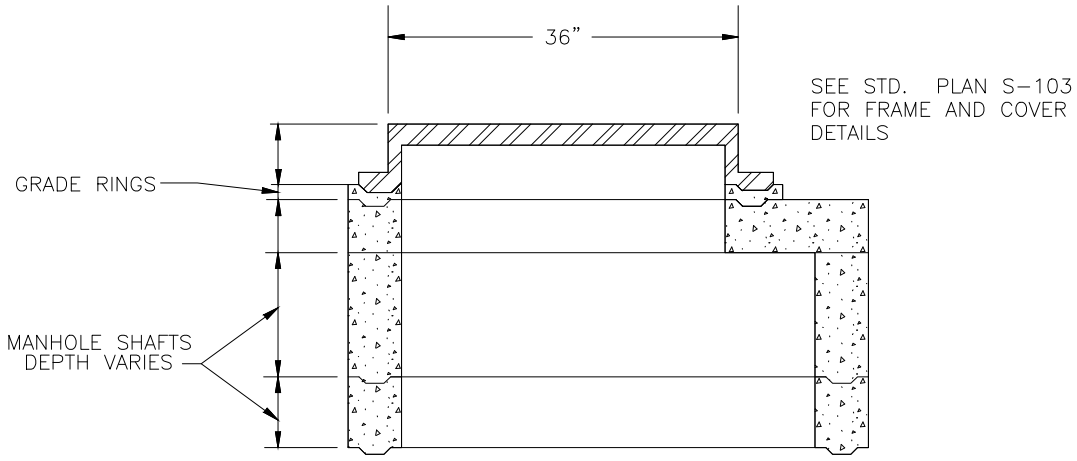

TYPICAL SECTION
FLAT TOP MANHOLE

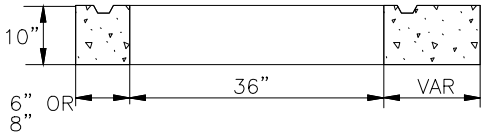

FLAT TOP COVER

NOTES

1. CONSTRUCTION SHALL BE IN ACCORDANCE WITH STD. PLAN S-101 AND S-103
2. REINFORCED CONCRETE MANHOLE, QUIKSET OR APPROVED EQUAL.
3. USE OF FLAT TOP MANHOLE REQUIRES WRITTEN DISTRICT APROVAL.

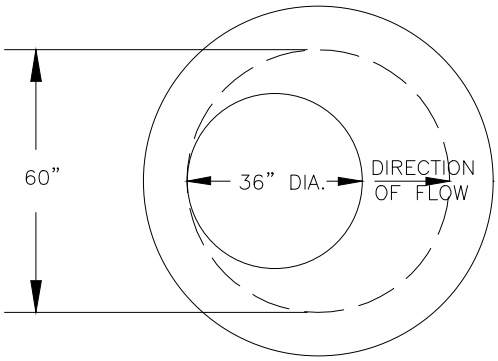

PLAN

Garden Grove Sanitary District

FLAT TOP MANHOLE

Approved _____ Date 12-8-15

City Engineer R.C.E. 52125 Exp.12-31-16

REVISIONS	BY	DATE

STD. PLAN NUMBER

S-116

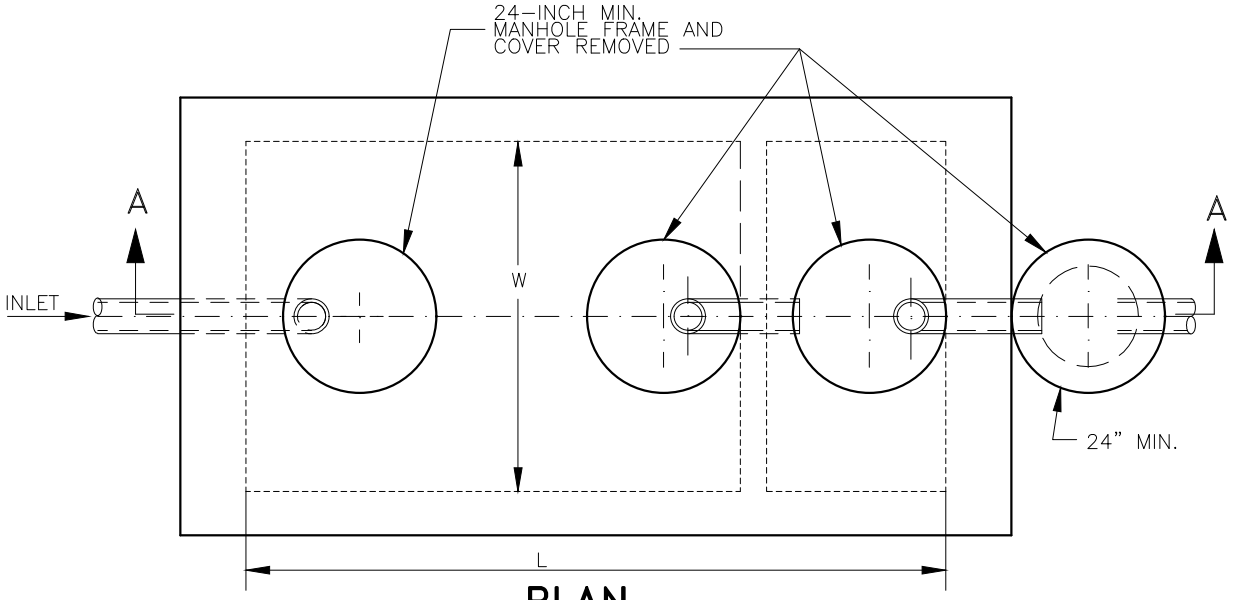

PLAN

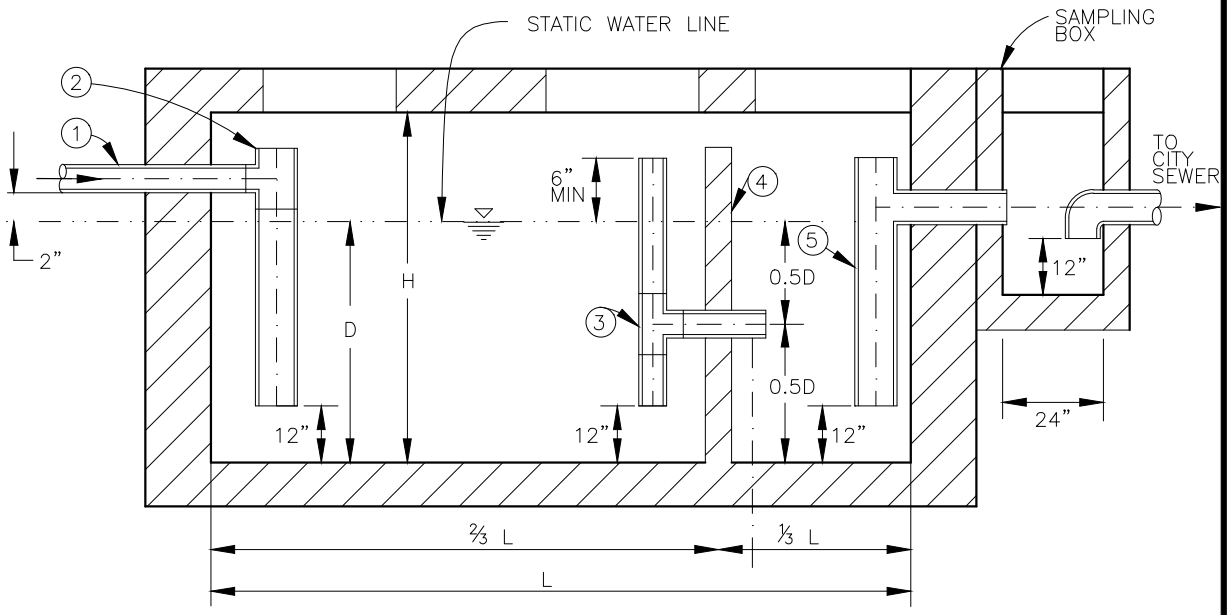

SECTION A–A

1. INLET PIPE 4–INCH MINIMUM
2. INFLOW TEE AND STANDPIPE
3. CROSSOVER TEE AND STANDPIPE
4. BAFFLE WALL
5. OUTFLOW TEE AND STANDPIPE

NOTE:

GREASE INTERCEPTOR SHALL BE DESIGNED AND SIZED IN ACCORDANCE WITH THE REQUIREMENTS OF THE CALIFORNIA PLUMBING CODE, APPENDIX H.

Garden Grove Sanitary District

TYPICAL GREASE INTERCEPTOR

Approved _____ Date 12–8–15

City Engineer R.C.E. 52125 Exp.12–31–16

REVISIONS	BY	DATE

STD. PLAN NUMBER

S–117

SHEET 1 OF 2

1. GREASE INTERCEPTOR SHALL BE INSTALLED IN CONFORMANCE WITH THE PROVISIONS OF THE CALIFORNIA PLUMBING CODE AS ADOPTED BY THE CITY OF GARDEN GROVE.
2. ALL GREASE INTERCEPTOR SHALL BE OF AN APPROVED TYPE AND INSTALLED IN ACCORDANCE WITH THE MANUFACTURES INSTALLATION INSTRUCTIONS OR AS SUBMITTED BY A DESIGN PROFESSIONAL.
3. INTERCEPTOR SHALL BE ON DRY LEVEL UNDISTURBED SOIL ON A FIRM COMPACTED BASE.
4. MANHOLE GRADE RINGS SHALL BE SEALED WITH MOTAR OR AN APPROVED ALTERNATIVE WATER BARRIER.
5. SAMPLE BOXES SHALL BE REQUIRED UNLESS EXEMPTED BY THE ENVIRONMENTAL SERVICES MANAGER.
6. ON PLUMBING PLAN SUBMITTAL INCORPORATE MANUFACTURE'S INSTALLATION INSTRUCTIONS, TYPE, AND LOCATION OF INTERCEPTOR.

Garden Grove Sanitary District

TYPICAL GREASE INTERCEPTOR

Approved Date 12-8-15

City Engineer R.C.E. 52125 Exp.12-31-16

REVISIONS	BY	DATE

STD. PLAN NUMBER

S-117

SHEET 2 OF 2

NEW SEWER

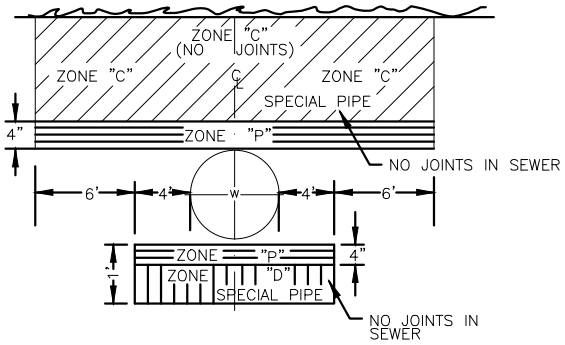

PERPENDICULAR CROSSING

NOTE: "P" IS A PROHIBITED CONSTRUCTION ZONE

NOTES:
ZONES IDENTICAL ON EITHER SIDE OF CENTER LINES. ZONE "P" IS A PROHIBITED ZONE, SECTION 64630 (2) CALIFORNIA ADMINISTRATIVE CODE, TITLE 22

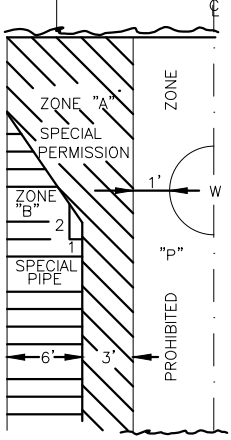

PARALLEL INSTALLATION

NEW SEWER BEING INSTALLED

ZONE	SPECIAL CONSTRUCTION REQUIRED FOR SEWER
A,B,C,D	SEWER LINES PARALLEL TO WATER MAINS SHALL NOT BE PERMITTED IN THIS ZONE WITHOUT APPROVAL FROM THE STATE WATER RESOURCES CONTROL BOARD (SWRCB) AND THE CITY.

B A SEWER LINE PLACED PARALLEL TO A WATER LINE SHALL BE CONSTRUCTED OF:

1. EXTRA STRENGTH VITRIFIED CLAY PIPE WITH COMPRESSION JOINTS.
2. PLASTIC SEWER PIPE WITH RUBBER RING JOINTS, DR 26.
3. DUCTILE IRON PIPE WITH COMPRESSION JOINTS.
4. REINFORCED CONCRETE PRESSURE PIPE WITH COMPRESSION JOINTS (PER AWWA C302–74).

C A SEWER LINE CROSSING A WATER MAIN SHALL BE CONSTRUCTED OF:

1. DUCTILE IRON PIPE WITH HOT DIP BITUMINOUS COATING AND MECHANICAL JOINTS. NO JOINTS WITHIN 10' EITHER SIDE OF WATER.
2. A CONTINUOUS SECTION OF CLASS 305 (DR 14 PER AWWA C900) PVC PIPE OR EQUIVALENT, CENTERED OVER THE WATER PIPE BEING CROSSED.
3. A CONTINUOUS SECTION OF REINFORCED CONCRETE PRESSURE PIPE (PER AWWA C302–74) CENTERED OVER THE PIPE BEING CROSSED.
4. ANY SEWER PIPE WITHIN A CONTINUOUS STEEL PIPE SLEEVE.

PARALLEL INSTALLATION (CONT.)

D A SEWER LINE CROSSING A WATER MAIN SHALL BE CONSTRUCTED OF

1. A CONTINUOUS SECTION OF DUCTILE IRON PIPE WITH HOT DIP BITUMINOUS COATING AND MECHANICAL JOINTS CENTERED ON THE WATER PIPE BEING CROSSED.
2. A CONTINUOUS SECTION OF CLASS 305 (DR 14 PER AWWA C900) PVC PIPE OR EQUIVALENT, CENTERED ON THE WATER PIPE BEING CROSSED.
3. A CONTINUOUS SECTION OF REINFORCED CONCRETE PRESSURE PIPE (PER AWWA C302–74) CENTERED ON THE WATER PIPE BEING CROSSED.
4. ANY SEWER PIPE WITHIN A CONTINUOUS STEEL PIPE SLEEVE.
5. ANY SEWER PIPE MATERIAL ENCASED IN REINFORCED CONCRETE PER STD. DWG. S–108 TYPE "B".

Garden Grove Sanitary District

DESIGN CRITERIA FOR SEPARATION OF WATER AND SEWER MAINS

Approved Date 12–8–15

City Engineer R.C.E. 52125 Exp.12–31–16

REVISIONS	BY	DATE

STD. PLAN NUMBER

S–118

Appendix E-3

Overflow Emergency Response Plan

SSO OVERFLOW EMERGENCY RESPONSE PLAN FOR PUBLIC SPILLS

PURPOSE:

To promptly contain, control, clean and protect public health from an unauthorized release of sewer wastewater, including notifying all appropriate agencies as a result of a public sewer system overflow (SSO).

OVERVIEW:

The Garden Grove Sanitary District (GGSD) a subsidiary district of the City of Garden Grove, owns and operates a diverse collection system that consists of three (3) pumping stations, 327 miles of gravity sewer mains, 9,150 feet of force mains, 37,100 sewer connections and an approximate population of 186,000[1] served by the GGSD. The proceeding plan provides how the GGSD responds to a public sewer overflow/spill. Actions presented reduce or eliminate public health hazards, prevent unnecessary property damage, minimize the inconvenience of service interruptions in event of an overflow/spill and prevent any overflows from entering streets, gutters and/or storm drains. GGSD utilizes the following five (5) main steps to take when responding to sewage overflow/spills:

1) CONTAIN spilling sewage
2) COMMUNICATE with agencies
3) CONTROL the spill and CLEAR the blockage
4) CLEAN UP affected areas
5) CALCULATE spill volume
6) PREVENT REOCCURANCE

NOTIFICATION PROCEDURES

The following illustrates GGSD's procedure to communicate internally and externally, mobilize, and respond to and correct or repair any condition that may cause or contribute to a SSO. There is a response to each reported spill caused by public or private facilities that occur on public or private property.

An overflow may be detected by GGSD staff, City employees, or by others (i.e. residents, business owners, etc.). The Water Services Division of the Department of Public Works is responsible for accepting all phone calls regarding possible sewer overflows during business hours, and is responsible for responding to these notifications 24 hours a day. After hours, a notification system is established with other City Departments which immediately directs any reports to the 24 hour on call "Stand-By" staff person for Water Services, who dispatches the crews, makes notifications to

[1] OCSD city and agency collection facilities O & M Survey '03-04 data

regulatory agencies and compiles information on the spill. The details of these procedures are summarized in the stepwise procedure below.

- Notification is received at the City, typically either from a private citizen, business owner or other GGSD or City staff.
- During business hours, calls are received at the City Water Services Division main office and then forwarded to the Sanitation Supervisor, Foreman, and other key GGSD personnel via text messaging. GGSD sanitation crews are then dispatched to the scene.
- After hours, City Police Department personnel will gather the proper information from callers and forward this information to the 24 hour on call "Stand-By" staff person.

Contain the Spill:

Upon arrival on the site, a preliminary investigation of the reported spill will take place in order to confirm whether a sewage spill is on private or public property. GGSD staff will determine what steps are needed to take place in order to contain the spill. GGSD will take the appropriate steps to prevent sewage from entering gutters, storm drains, channels or other critical locations. Containing the spill with sand bags, dirt berms and/or placing rubber mats over catch basins is initiated to prevent sewage from entering waters of the state. This includes surface, ground and storm drain water within the City boundaries. Afterwards, GGSD staff will establish perimeters and/or control zones utilizing cones, barricades and/or delineators. If necessary, GGSD staff will contact other City of Garden Grove Divisions for assistance.

If sewage enters a catch basin or storm drain, GGSD staff will go down stream to intercept and contain the flow of sewage. Once the sewage is contained, the combination truck will be used to vacuum up the sewage and wash down water from the catch basin or storm drain.

Communicate and Notification:

GGSD staff will identify the responsible party at the location of the spill then collect and document all information regarding the spill as set forth by the Regional Water Quality Control Board (RWQCB). RWQCB, Orange County Health Care Agency (OCHCA), and Orange County Public Works (OC Public Works) must be immediately notified of all spills via telephone, voice mail, or email. Spills that are 1,000 gallons or more must also be reported to the Office of Emergency Services (OES). In addition to the above agencies, GGSD staff also informs the Garden Grove Environmental Management Team (GGEMT) who is responsible for the Fats, Oils, and Grease (FOG) program and has the legal authority to cite businesses. GGSD staff will take photos of the spills. All agencies affected as specified by local, state, and other regulations will be notified.

The following summarizes the notification and reporting process:

Orange County Santa Ana Region

Sanitary Sewer Overflow Notification & Reporting Guidelines

Statewide General Waste Discharge Requirements Order No. 2006-0003 finds that all federal and state agencies, municipalities, counties, districts, and other public entities that own or operate sanitary sewer systems greater than one mile in length requires notification and reporting of all sanitary sewer overflows (SSOs). SSOs are defined as any overflow, spill, release, discharge or diversion of wastewater from a sanitary sewer system. (See page 5 of the Order No. 2006-0003 for the complete definition of SSOs).

Type of SSO	Initial Notification Timeframe*	Agency to Notify by Phone	Report Timeframe
Category 1 – Discharges of untreated or partially treated wastewater resulting from an enrollee's sanitary sewer system failure or flow condition that: A. Reach surface water and/or reach a drainage channel tributary to a surface water; or B. Reach a municipal separate storm sewer system and are not fully captured and returned to the sanitary sewer system or not otherwise captured and disposed of properly. (Any volume of wastewater not recovered from the municipal separate storm sewer system is considered to have reached surface water unless the storm drain system discharges to a dedicated storm water or ground water infiltration basin (e.g., infiltration pit, percolation pond).) **<u>Greater than or equal to 1,000 gallons</u>**, **notify the OES** and obtain a notification control number.	As soon as practical within 2 hours of becoming aware	• OES1 • OCHCA[2] • OC Public Works[3] and city	Submit Draft report within 3 business days of becoming aware of the SSO. Certify within 15 calendar days of SSO end date. SSO Technical Report: Certify within 45 calendar days after the end date of any Category 1 SSO in which 50,000 gallons or greater is spilled to surface waters.
Category 1 – <u>any volume < 1000 gallons</u>	As soon as practical	• OCHCA[2]	
Category 2 – Discharges of untreated or partially treated wastewater of **<u>1,000 gallons or greater</u>** resulting from an enrollee's sanitary sewer system failure or flow condition that **<u>do not</u>** reach surface water, a drainage channel, or a municipal separate storm sewer system unless the entire SSO discharged to the storm drain system is fully recovered and disposed of properly.	As soon as practical	• OCHCA[2]	Submit Draft report within 3 business days of becoming aware of the SSO. Certify within 15 calendar days of SSO end date.
Category 3 – All other discharges of untreated or partially treated wastewater resulting from an enrollee's sanitary sewer system failure or flow condition.	As soon as practical	• OCHCA[2]	Submit Certified report within 30 calendar days after the end of month in which SSO occurred.
Private lateral – Discharges of untreated or partially treated wastewater resulting from blockages or other problems within a privately owned sewer lateral connected to the enrollee's sanitary sewer system or from other private sewer assets.	As soon as practical	• OCHCA[2] • OC Public Works[3] and city	PLSDs that the enrollee becomes aware of may be voluntarily reported to the CIWQS Online SSO Database.

Notes: *Updates should be provided as necessary; 1 Water Code section 13271; 2 Health and Safety Code; 3 NPDES Stormwater Regulations and local Water Quality Ordinance.

SSO Notification Contacts:

Normal Hours	After Hours
OCHCA (Please call down the list until someone is contacted) 1. (714) 433-6419 (Office Support Staff) 2. Hisham Elmishad (714) 433-6284 3. Juan Anzora (714) 433-6287 4. Pauline Liu (714) 433-6286	Control 1: (714) 628-7008 (will contact OCHCA oncall staff)
RWQCB - Santa Ana Region (951) 782-4130 Najah Amin (951) 320-6362	RWQCB: (951) 782-4130 (voice mail) OES: (800) 852-7550
OES (Office of Emergency Services) (800) 852-7550	24 hours
OC Public Works (714) 955-0600 (storm drain/flood channel facility owners) (877) 89-SPILL (897-7455) 24 HR. Hotline	Control 1: (714) 628-7008 (specify water pollution incident notification)
Water Quality Monitoring Sierra Analytical Labs, Inc (Rick Forsyth) (714)-348-9389	(714) 348-9389; sierralabs@sierralabs.net; www.sierralabs.net/sierra.html
Water Quality Monitoring Associated Laboratories (714) 771-6900	(714) 771-6900; info@associatedlabs.com; www.associatedlabs.com

Developed by the Orange County Sanitation District with RWQCB, OCHCA and OC Public Works. Updated on 3/26/2018.

The Sanitary Sewer Overflow (SSO) task force must also be contacted for spills that is not fully contained and returned to the sewer system or when sewage enters storm drains and/or waters of the state. The task force consists of the Public Works Director, City Engineer, Water Services Manager, Streets/Environmental Services Manager, Sanitation Supervisor, Sanitation Foreman, and any others necessary to complete tasks. The task force will take the appropriate steps to ensure compliance with all regulatory agencies and oversee clean up procedures. In addition, the task force may be convened when, in the opinion of any task force member, circumstances exist that warrant the convening of the group.

Written reports of overflows/spills must be prepared and filed as set forth per the Sanitary Sewer Overflow Reporting Guidelines.

It is necessary to document all relevant information, such as:

1) The time the SSO is first reported to GGSD and the name and phone number of the person reporting the SSO.

2) Names of GGSD staff reporting SSO to RWQCB (date and time contacted).

3) Names of GGSD staff responding to SSO.

4) Verified SSO start time through witnesses and stop time and dates.

5) Whether SSO reached storm drain or other surface waters.

6) Containment information.

7) Wash water disposal method.

8) Estimated SSO rate and calculation tabulation methodology used.

9) Amount (volume) of SSO lost and recovered.

10) Amount (volume) of recovered and lost wash water and sewage-contaminated water.

11) Location of the SSO (address, city, zip, county).

12) Number of prior SSO's within 1000 ft of the location and dates of prior SSO's.

13) Location of potential blockage and description of component from which spill occurred.

14) Likely cause of SSO.

15) SSO cause- detailed description.

16) Measurable precipitation during 72-hour prior to SSO.

17) Steps taken or planned to reduce, eliminate and prevent reoccurrence or mitigate the impact of SSO and schedule of major milestones.

18) Where SSO entered storm drain inlet, initial and/or secondary receiving water name/description.

19) Final destination of sewage.

20) Notification times and person(s) contacted at OCHCA, RWCQB, RDMD, and/or OES.

21) If possible, photo documentation of spill containment efforts.

22) All copies of reports, faxes, photos etc. need to be kept in the spill document binder and Waste Discharge filing cabinet located at the City Garden Grove Municipal Yard, Water Services Division, 13802 Newhope St. Garden Grove, CA 92843.

23) Note if the GGEMT is involved, and include GGEMT's findings, conclusions, and any actions taken or pending.

Control the Spill/Clear the Blockage:

Primary inspection to control the spill will begin at manholes both upstream and downstream of the overflowing manhole. The blockage location will then be determined. A combination truck will set up at the next manhole downstream of the overflowing manhole. Here the crew will be able to access the sewer line to relieve the blockage and determine the cause.

Clean Up the Spill:

All overflow/spills must be cleaned regardless of size. Affected areas are to be washed down then vacuumed up utilizing a vactor truck to prevent sewage overflow/spills and wash water from entering waters of the state. All solids or semisolids resulting from the cleaning operations will be

removed from the site and disposed at OCSD's Treatment Plant No. 2 located in Huntington Beach. For GGSD's records, photographs of affected area and existing damaged areas are taken for use in documenting factual evidence of the scene.

Calculate the Spill:

Water pump station flow rates assist in calculations. GGSD staff will record spill volumes on spill response form. GGSD uses several different methods for calculating spills: GGSD Flow Calculation Options, visual observation, OCSD's Flow Spreadsheet, and San Diego Wastewater Collection System Division Overflow Rate Demonstration sheet.

In order to calculate a spill the following methods may be used:

1) Area Calculation (for Ponded Areas)
    - Length in feet (ft.) x Width (in ft.) x Depth (in ft.) = Cubic ft. x 7.48 gallons = spill amount in gallons (gal.)
      (L x W x D = Cu. Ft. x 7.48 = gal.)

2) Flow Calculation (for V-gutters and Channels)
    - Width (in ft.) x Depth (in ft.) x Ft. per second (fps) = Cu. Ft. x 60 seconds per min. (spm) = __ x __ Minutes of Spill (mos) = __ x 7.48 Gal. = Spill Amount in Gallons.
      (W x D x fps = cu.ft. x 60 spm = __ X __ mos x 7.48 gal. = spill amt.)

3) Triangle Flow Calculation (for Curb and Gutter)
    - Width (in ft.) x ½ Depth (in ft.) x Fps = Cu. Ft. x 60 Sec/Min. (spm) = __x__ Min. of Spill (mos) =__x 7.48 gal. = Spill amount in gallons
      (W x ½ D x fps = cu.ft. x 60 spm = __x__mos =__x 7.48 = spill amount)

4) When flow has ceased prior to GGSD arrival and a ponded area is not present such as in the case of a mere wet spot around a manhole, an estimation of flow is made based upon a visual observation.

5) Orange County Sanitation District SSO Estimation Chart (for Manhole Cover Vent Holes and Pick Holes Flow)

Estimated Flows thru Manhole Cover Vent Holes and Pick Holes for SSO estimating

Hole Dia. inches	Area sq. ft.	Coeff.of Vel. Cv	Coeff. Of Cont. Cc	C Cv x Cc	Water Ht inches	Water Ht inches	Water Ht feet	Q cfs	Q gpm	Q gph
	Formula: =0.785*Ax*Ax/144			Formula: =Ix*449			Formula: =Gx/12	Formula: =Ex*Bx*(SQRT(2*32.2*Hx))	Formula: =Ix*449	Formula: =Jx*60
Vent Hole										
0.50	0.00136	0.945	0.70	0.662	1/16 th	0.063	0.005	0.0005	0.23	14
0.50	0.00136	0.945	0.70	0.662	1/8 th	0.125	0.010	0.0007	0.33	20
0.50	0.00136	0.945	0.70	0.662	1/4 th	0.250	0.021	0.0010	0.47	28
0.50	0.00136	0.945	0.70	0.662	one half	0.500	0.042	0.0015	0.66	40
0.50	0.00136	0.945	0.70	0.662	3/4 ths	0.750	0.063	0.0018	0.81	49
0.50	0.00136	0.945	0.70	0.662	1 inch	1.000	0.083	0.0021	0.94	56
0.50	0.00136	0.945	0.70	0.662	1 1/4 "	1.250	0.104	0.0023	1.05	63
0.50	0.00136	0.945	0.70	0.662	1 3/8"	1.375	0.115	0.0024	1.10	66
0.50	0.00136	0.945	0.70	0.662	1 1/2"	1.500	0.125	0.0026	1.15	69
0.50	0.00136	0.945	0.70	0.662	1 5/8"	1.625	0.135	0.0027	1.20	72
0.50	0.00136	0.945	0.70	0.662	1 3/4"	1.750	0.146	0.0028	1.24	74
0.50	0.00136	0.945	0.70	0.662	2 inches	2.000	0.167	0.0030	1.33	80
0.50	0.00136	0.945	0.70	0.662	2 1/4"	2.250	0.188	0.0031	1.41	84
0.50	0.00136	0.945	0.70	0.662	2 1/2"	2.500	0.208	0.0033	1.48	89
0.50	0.00136	0.945	0.70	0.662	2 3/4"	2.750	0.229	0.0035	1.56	93
0.50	0.00136	0.945	0.70	0.662	3 inches	3.000	0.250	0.0036	1.62	97
0.50	0.00136	0.945	0.70	0.662	3 1/4"	3.250	0.271	0.0038	1.69	101
0.50	0.00136	0.945	0.70	0.662	3 1/2"	3.500	0.292	0.0039	1.75	105
0.50	0.00136	0.945	0.70	0.662	3 3/4"	3.750	0.313	0.0040	1.82	109
0.50	0.00136	0.945	0.70	0.662	4.000	4.000	0.333	0.0042	1.88	113
Vent Hole										
0.75	0.00307	0.955	0.67	0.640	1/16 th	0.063	0.005	0.0011	0.51	31
0.75	0.00307	0.955	0.67	0.640	1/8 th	0.125	0.010	0.0016	0.72	43
0.75	0.00307	0.955	0.67	0.640	1/4 th	0.250	0.021	0.0023	1.02	61
0.75	0.00307	0.955	0.67	0.640	one half	0.500	0.042	0.0032	1.44	87
0.75	0.00307	0.955	0.67	0.640	3/4 ths	0.750	0.063	0.0039	1.77	106
0.75	0.00307	0.955	0.67	0.640	1 inch	1.000	0.083	0.0045	2.04	122
0.75	0.00307	0.955	0.67	0.640	1 1/4 "	1.250	0.104	0.0051	2.28	137
0.75	0.00307	0.955	0.67	0.640	1 3/8"	1.375	0.115	0.0053	2.39	144
0.75	0.00307	0.955	0.67	0.640	1 1/2"	1.500	0.125	0.0056	2.50	150
0.75	0.00307	0.955	0.67	0.640	1 5/8"	1.625	0.135	0.0058	2.60	156
0.75	0.00307	0.955	0.67	0.640	1 3/4"	1.750	0.146	0.0060	2.70	162
0.75	0.00307	0.955	0.67	0.640	2 inches	2.000	0.167	0.0064	2.89	173
0.75	0.00307	0.955	0.67	0.640	2 1/4"	2.250	0.188	0.0068	3.06	184
0.75	0.00307	0.955	0.67	0.640	2 1/2"	2.500	0.208	0.0072	3.23	194
0.75	0.00307	0.955	0.67	0.640	2 3/4"	2.750	0.229	0.0075	3.38	203
0.75	0.00307	0.955	0.67	0.640	3 inches	3.000	0.250	0.0079	3.53	212
0.75	0.00307	0.955	0.67	0.640	3 1/4"	3.250	0.271	0.0082	3.68	221
0.75	0.00307	0.955	0.67	0.640	3 1/2"	3.500	0.292	0.0085	3.82	229
0.75	0.00307	0.955	0.67	0.640	3 3/4"	3.750	0.313	0.0088	3.95	237
0.75	0.00307	0.955	0.67	0.640	4.000	4.000	0.333	0.0091	4.08	245
Vent Hole										
1.00	0.00545	0.960	0.65	0.624	1/16 th	0.063	0.005	0.0020	0.88	53
1.00	0.00545	0.960	0.65	0.624	1/8 th	0.125	0.010	0.0028	1.25	75
1.00	0.00545	0.960	0.65	0.624	1/4 th	0.250	0.021	0.0039	1.77	106
1.00	0.00545	0.960	0.65	0.624	one half	0.500	0.042	0.0056	2.50	150
1.00	0.00545	0.960	0.65	0.624	3/4 ths	0.750	0.063	0.0068	3.06	184
1.00	0.00545	0.960	0.65	0.624	1 inch	1.000	0.083	0.0079	3.54	212
1.00	0.00545	0.960	0.65	0.624	1 1/4 "	1.250	0.104	0.0088	3.96	237
1.00	0.00545	0.960	0.65	0.624	1 3/8"	1.375	0.115	0.0092	4.15	249
1.00	0.00545	0.960	0.65	0.624	1 1/2"	1.500	0.125	0.0097	4.33	260
1.00	0.00545	0.960	0.65	0.624	1 5/8"	1.625	0.135	0.0100	4.51	271
1.00	0.00545	0.960	0.65	0.624	1 3/4"	1.750	0.146	0.0104	4.68	281
1.00	0.00545	0.960	0.65	0.624	2 inches	2.000	0.167	0.0111	5.00	300
1.00	0.00545	0.960	0.65	0.624	2 1/4"	2.250	0.188	0.0118	5.31	318
1.00	0.00545	0.960	0.65	0.624	2 1/2"	2.500	0.208	0.0125	5.59	336
1.00	0.00545	0.960	0.65	0.624	2 3/4"	2.750	0.229	0.0131	5.87	352
1.00	0.00545	0.960	0.65	0.624	3 inches	3.000	0.250	0.0136	6.13	368

Estimated Flows thru Manhole Cover Vent Holes and Pick Holes for SSO estimating

Hole Dia. inches	Area sq. ft.	Coeff.of Vel. Cv	Coeff. Of Cont. Cc	C Cv x Cc	Water Ht inches	Water Ht inches	Water Ht feet	Q cfs	Q gpm	Q gph
	Formula: =0.785*Ax*Ax/144			Formula: =Ix*449			Formula: =Gx/12	Formula: =Ex*Bx*(SQRT(2*32.2*Hx))	Formula: =Ix*449	Formula: =Jx*60
Vent Hole										
1.00	0.00545	0.960	0.65	0.624	3 1/4"	3.250	0.271	0.0142	6.38	383
1.00	0.00545	0.960	0.65	0.624	3 1/2"	3.500	0.292	0.0147	6.62	397
1.00	0.00545	0.960	0.65	0.624	3 3/4"	3.750	0.313	0.0153	6.85	411
1.00	0.00545	0.960	0.65	0.624	4.000	4.000	0.333	0.0158	7.08	425
Pick Hole semicircular area										
1.00	0.00273	0.960	0.65	0.624	1/16 th	0.063	0.005	0.0010	0.44	27
1.00	0.00273	0.960	0.65	0.624	1/8 th	0.125	0.010	0.0014	0.63	38
1.00	0.00273	0.960	0.65	0.624	1/4 th	0.250	0.021	0.0020	0.89	53
1.00	0.00273	0.960	0.65	0.624	one half	0.500	0.042	0.0028	1.25	75
1.00	0.00273	0.960	0.65	0.624	3/4 ths	0.750	0.063	0.0034	1.53	92
1.00	0.00273	0.960	0.65	0.624	1 inch	1.000	0.083	0.0039	1.77	106
1.00	0.00273	0.960	0.65	0.624	1-1/2 inch	1.500	0.125	0.0048	2.17	130
1.00	0.00273	0.960	0.65	0.624	2 inches	2.000	0.167	0.0056	2.51	150
1.00	0.00273	0.960	0.65	0.624	2 1/4"	2.250	0.188	0.0059	2.66	159
1.00	0.00273	0.960	0.65	0.624	2 1/2"	2.500	0.208	0.0062	2.80	168
1.00	0.00273	0.960	0.65	0.624	2 3/4"	2.750	0.229	0.0065	2.94	176
1.00	0.00273	0.960	0.65	0.624	3 inches	3.000	0.250	0.0068	3.07	184
1.00	0.00273	0.960	0.65	0.624	3 1/4"	3.250	0.271	0.0071	3.19	192
1.00	0.00273	0.960	0.65	0.624	3 1/2"	3.500	0.292	0.0074	3.31	199
1.00	0.00273	0.960	0.65	0.624	3 3/4"	3.750	0.313	0.0076	3.43	206
1.00	0.00273	0.960	0.65	0.624	4.000	4.000	0.333	0.0079	3.54	213

Prevent Reoccurrence

All surrounding lines are cleaned to ensure a continued normal flow. The area is put on a hot spot list. All adjacent line(s) are inspected via Closed Circuit Television (CCTV). If structural deficiencies are found, repairs are scheduled and the area remains on a hot spot list until repairs are completed.

If the SSO is Food Service Establishment (FSE) and/or Fats, Oils, Grease (FOG) related, the GGEMT is contacted to perform follow up inspections and the owner/agent is put on notice pending further action based upon the results of the GGEMT follow up inspections.

Force Main Leak:

Clean up and containment efforts similar to those for a sewer line blockage/spill are utilized. In the event that an overflow/spill has occurred due to a leak from a force main, the following actions will be taken.

1. The force main pumps will be shut down. This will prevent pumping more sewage to the broken line. Based on visual observation, if wet wells are close to capacity, then a bypass sewer line will be put in place to allow sewage flow during construction/repairs.

2. Contact will be made with the appropriate agencies.

3. GGSD staff will locate the break and decide upon a strategy for repair.

4. GGSD will block the channel with any necessary means to prevent sewage from flowing down the channel. GGSD has contractors that can be contacted 24-hours a day, seven (7) days a week, for emergency repairs.

5. A bypass sewer line will be put in place to allow sewage flow during construction/repairs.

6. Use trailer mounted by-pass pump when needed.

If a bypass is not feasible, a vactor truck will be on site to vacuum up sewage from a manhole near the break. Depending on the nature of the damage to the pipeline, location of the leak, volume of flow being conveyed and depth of the pipeline, emergency repairs may be performed by GGSD staff or by a contractor. Since the threat to the environment and the public health would still exist, the clean up and containment efforts would be similar to those for a main line blockage/spill.

Pump Station Failure:

Each pump station is fitted with an alarm system that provides information to the Water Services main office in the event of a system failure. Upon receiving an alarm message, the Stand-By person will be contacted. GGSD will respond immediately and determine if the shutdown of the pump or equipment failure will result in the release of sewage. GGSD staff will contact the appropriate personnel from within the Public Works Department for assistance. Mobilizing the necessary equipment needed in a timely fashion is vital in the event of a pump station failure. Pump stations are fitted with a backup generator.

In the event of a power outage, the back-up generators are automatically activated. Pump station wells can collect sewage inflow at peak times for four to eight hours before affecting service. Steps leading to the return of proper operation of the pump station will commence when the proper equipment is on site.

SSO EMERGENCY RESPONSE PLAN FOR PRIVATE SPILLS

Purpose:

To promptly contain, control, clean and protect public health from an unauthorized release of sewer wastewater, including notifying all appropriate agencies as a result of a private sewer system overflow.

Overview:

The Garden Grove Sanitary District (GGSD) a subsidiary district of the City of Garden Grove, owns and operates a diverse collection system that consists of three (3) pumping stations, 327 miles of gravity sewer mains, 9,150 feet of force mains, 37,100 sewer connections and an approximate population of 186,000[2] served by the GGSD. The proceeding plan provides how the GGSD responds to a public sewer overflow/spill. Actions presented reduce or eliminate public health hazards, prevent unnecessary property damage, minimize the inconvenience of service interruptions in event of an overflow/spill and prevent any overflows from entering streets, gutters and/or storm drains. GGSD utilizes the following five (5) main steps to take when responding to sewage overflow/spills:

GGSD utilizes the following four main steps when responding to private sewage overflow/spills:

1) CONTAIN spilling sewage and prevent from entering streets, gutters, and/or storm drain systems.

2) COMMUNICATE with agencies, property owner, and the Garden Grove Environmental Management Team (GEMT).

3) CALCULATE spill volume.

4) CLEAN UP affected areas

NOTIFICATION PROCEDURES

The following illustrates GGSD's procedure to communicate internally and externally, mobilize, and respond to and correct or repair any condition that may cause or contribute to a SSO. There is a response to each reported spill caused by public or private facilities that occur on public or private property.

An overflow may be detected by GGSD staff , City employees, or by others (i.e. residents, business owners, etc.). The Water Services Division of the Department of Public Works is responsible for

[2] OCSD city and agency collection facilities O & M Survey '03-04 data

accepting all phone calls regarding possible sewer overflows during business hours, and is responsible for responding to these notifications 24 hours a day. After hours, a notification system is established with other City Departments which immediately directs any reports to the 24 hour on call "Stand-By" staff person for Water Services, who dispatches the GGSD crews, makes notifications to regulatory agencies and compiles information on the spill. The details of these procedures are summarized in stepwise procedure below.

- Notification is received at the City, typically either from a private citizen, business owner or other GGSD or City staff.
- During business hours, calls are received at the City Water Services Division main office and then forwarded to the Sanitation Supervisor, Foreman, and other key GGSD personnel via text messaging. GGSD sanitation crews are then dispatched to the scene.
- After hours, City Police Department personnel will gather the proper information from callers and forward this information to the 24 hour on call "Stand-By" staff person.

Contain the Spill:

Upon arrival at the site, a preliminary investigation of the reported spill will take place in order to confirm whether a sewage spill is on private or public property. The GGSD staff will determine what steps are needed to take place in order to contain the spill. If a spill is found on private property, the GGSD crews will take the appropriate steps to prevent sewage from entering gutters, catch basins, storm drains, channels or other critical locations.

Containing the spill with sand bags, dirt berms and/or placing rubber mats over catch basins is initiated to prevent sewage from entering waters of the state. This includes surface, ground and storm drain waters within the state boundaries. Afterwards, GGSD crews will establish perimeters and/or control zones utilizing cones, barricades and/or delineators to prevent citizen contact with sewage overflow. If a spill is determined to be on public property the outlined steps in the SSO Emergency Response Plan for Public Spills will be followed.

If sewage enters a catch basin or storm drain, GGSD staff will go down stream to intercept and contain the flow of sewage. Once the sewage is contained, the combination truck will be used to vacuum up the sewage and wash down water from the catch basin or storm drain.

Communicate and Notification:

GGSD crews will identify the responsible property owner at the location of the spill to collect and document all information regarding the spill as set forth by the RWQCB. RWQCB, OC Public Works, and the OCHCA will be notified of all spills regardless of size. GGSD staff will take pictures of the spill and forward the files to the City of Garden Grove Environmental Management Team (GGEMT) who is responsible for the Fats, Oils, and Grease (FOG) program and who has the legal authority to cite businesses. All agencies affected as specified by local, state, and other regulations will also be notified.

GGSD will inform the property owner that it is their responsibility to hire a private contractor or plumber at their expense to remedy the problem. If the property owner is uncooperative or unavailable to provide information, the GGSD staff will contact the OCHCA, OC Public Works, and RWQCB to inform them of an uncooperative or unavailable property owner.

GGSD staff will standby on-site until the problem has been resolved. After a reasonable time, if the private plumber or private contractor has not resolved the problem, then GGSD staff will take the necessary measures to remedy the problem at the property owners' expense. If the property owner fails to correct the problem, they may be subject to having their water service turned off and face possible fines and/or penalties.

GGSD staff will inform the property owner of measures that can be taken in order to prevent future spills. This includes grease control handouts and/or information on how to contact plumbers for preventative maintenance.

The following summarizes the notification process:

Orange County Santa Ana Region

Sanitary Sewer Overflow Notification & Reporting Guidelines

Statewide General Waste Discharge Requirements Order No. 2006-0003 finds that all federal and state agencies, municipalities, counties, districts, and other public entities that own or operate sanitary sewer systems greater than one mile in length requires notification and reporting of all sanitary sewer overflows (SSOs). SSOs are defined as any overflow, spill, release, discharge or diversion of wastewater from a sanitary sewer system. (See page 5 of the Order No. 2006-0003 for the complete definition of SSOs).

Type of SSO	Initial Notification Timeframe*	Agency to Notify by Phone	Report Timeframe
Category 1 – Discharges of untreated or partially treated wastewater resulting from an enrollee's sanitary sewer system failure or flow condition that: C. Reach surface water and/or reach a drainage channel tributary to a surface water; or D. Reach a municipal separate storm sewer system and are not fully captured and returned to the sanitary sewer system or not otherwise captured and disposed of properly. (Any volume of wastewater not recovered from the municipal separate storm sewer system is considered to have reached surface water unless the storm drain system discharges to a dedicated storm water or ground water infiltration basin (e.g., infiltration pit, percolation pond).) **Greater than or equal to 1,000 gallons**, **notify the OES** and obtain a notification control number.	As soon as practical within 2 hours of becoming aware	• OES1 • OCHCA[2] • OC Public Works[3] and city	Submit Draft report within 3 business days of becoming aware of the SSO. Certify within 15 calendar days of SSO end date. SSO Technical Report: Certify within 45 calendar days after the end date of any Category 1 SSO in which 50,000 gallons or greater is spilled to surface waters.
Category 1 – any volume < 1000 gallons	As soon as practical	• OCHCA[2]	
Category 2 – Discharges of untreated or partially treated wastewater of **1,000 gallons or greater** resulting from an enrollee's sanitary sewer system failure or flow condition that **do not** reach surface water, a drainage channel, or a municipal separate storm sewer system unless the entire SSO discharged to the storm drain system is fully recovered and disposed of properly.	As soon as practical	• OCHCA[2]	Submit Draft report within 3 business days of becoming aware of the SSO. Certify within 15 calendar days of SSO end date.
Category 3 – All other discharges of untreated or partially treated wastewater resulting from an enrollee's sanitary sewer system failure or flow condition.	As soon as practical	• OCHCA[2]	Submit Certified report within 30 calendar days after the end of month in which SSO occurred.
Private lateral – Discharges of untreated or partially treated wastewater resulting from blockages or other problems within a privately owned sewer lateral connected to the enrollee's sanitary sewer system or from other private sewer assets.	As soon as practical	• OCHCA[2] • OC Public Works[3] and city	PLSDs that the enrollee becomes aware of may be voluntarily reported to the CIWQS Online SSO Database.

Notes: *Updates should be provided as necessary; 1 Water Code section 13271; 2 Health and Safety Code; 3 NPDES Stormwater Regulations and local Water Quality Ordinance.

SSO Notification Contacts:

Normal Hours	After Hours
OCHCA (Please call down the list until someone is contacted) 5. (714) 433-6419 (Office Support Staff) 6. Hisham Elmishad (714) 433-6284 7. Juan Anzora (714) 433-6287 8. Pauline Liu (714) 433-6286	Control 1: (714) 628-7008 (will contact OCHCA oncall staff)
RWQCB - Santa Ana Region (951) 782-4130 Najah Amin (951) 320-6362	RWQCB: (951) 782-4130 (voice mail) OES: (800) 852-7550
OES (Office of Emergency Services) (800) 852-7550	24 hours
OC Public Works (714) 955-0600 (storm drain/flood channel facility owners) (877) 89-SPILL (897-7455) 24 HR. Hotline	Control 1: (714) 628-7008 (specify water pollution incident notification)
Water Quality Monitoring Sierra Analytical Labs, Inc (Rick Forsyth) (714)-348-9389	(714) 348-9389; sierralabs@sierralabs.net; www.sierralabs.net/sierra.html
Water Quality Monitoring Associated Laboratories (714) 771-6900	(714) 771-6900; info@associatedlabs.com; www.associatedlabs.com

Developed by the Orange County Sanitation District with RWQCB, OCHCA and OC Public Works. Updated on 3/26/2018.

A Sanitary Sewer Overflow (SSO) task force has been established and must be contacted for spills in excess of 1,000 gallons or when sewage enters storm drains and/or waters of the state. The task force consists of the Public Works Director, City Engineer, Water Services Manager, Streets/Environmental Services Manager, Sanitation Supervisor, Sanitation Foreman, and any others necessary to complete tasks. The task force will take the appropriate steps to ensure compliance with all regulatory agencies and oversee clean up procedures. In addition, the task force may be convened when, in the opinion of any task force member, there are circumstances that warrant the convening of the group.

Written reports of overflows/spills must be prepared and filed within five (5) days with the above agencies after immediate notification has been completed.

It is necessary to document all relevant information, such as:

1. The time the SSO is first reported to GGSD and the name and phone number of the person reporting the SSO.

2. Names of GGSD staff reporting SSO to RWQCB (date and time contacted).

3. Names of GGSD staff responding to SSO.

4. Verified SSO start time through witnesses and stop time and dates.

5. Whether SSO reached storm drain or other surface waters.

6. Containment information.

7. Wash water disposal method.

8. Estimated SSO rate and calculation tabulation methodology used.

9. Amount (volume) of SSO lost and recovered.

10. Amount (volume) of recovered and lost wash water and sewage-contaminated water.

11. Location of the SSO (address, city, zip, county).

12. Number of prior SSO's within 1000 ft of the location and dates of prior SSO's.

13. Location of potential blockage and description of component from which spill occurred.

14. Likely cause of SSO.

15. SSO cause- detailed description.

16. Measurable precipitation during 72-hour prior to SSO.

17. Steps taken or planned to reduce, eliminate and prevent reoccurrence or mitigate the impact of SSO and schedule of major milestones.

18. Where SSO entered storm drain inlet, initial and/or secondary receiving water name/description.

19. Final destination of sewage.

20. Notification times and person(s) contacted at OCHCA, RWCQB, RDMD, and/or OES.

21. If possible, photo documentation of spill containment efforts.

22. All copies of reports, faxes, photos etc. need to be kept in the spill document binder and Waste Discharge filing cabinet located at the City Garden Grove Municipal Yard, Water Services Division, 13802 Newhope St. Garden Grove, CA 92843.

23. Note if the GGEMT is involved, include GGEMT's findings, conclusions, and any actions taken or pending.

Calculate the Spill:

Water pump station flow rates assist in calculations. GGSD staff will record spill volumes on spill response form. GGSD uses several different methods for calculating spills: GGSD Flow Calculation Options, visual observation, OCSD's Flow Spreadsheet, and San Diego Wastewater Collection System Division Overflow Rate Demonstration sheet.

In order to calculate a spill the following methods may be used:

1) Area Calculation (for Ponded Areas)
   - Length in feet (ft.) x Width (in ft.) x Depth (in ft.) = Cubic ft. x 7.48 gallons = spill amount in gallons (gal.)
     (L x W X D = Cu. Ft. x 7.48 = gal.)

2) Flow Calculation (for V-gutters and Channels)
   - Width (in ft.) x Depth (in ft.) x Ft. per second (fps) = Cu. Ft. x 60 seconds per min. (spm) = __ x __ Minutes of Spill (mos) = __ x 7.48 Gal. = Spill Amount in Gallons.
     (W x D x fps = cu.ft. x 60 spm = __ X __ mos x 7.48 gal. = spill amt.)

3) Triangle Flow Calculation (for Curb and Gutter)
   - Width (in ft.) x ½ Depth (in ft.) x Fps = Cu. Ft. x 60 Sec./Min. (spm) = __x__ Min. of Spill (mos) =__x 7.48 gal. = Spill amount in gallons
     (W x ½ D x fps = cu.ft. x 60 spm = __x__mos =__x 7.48 = spill amount)

4) When flow has ceased prior to GGSD arrival and a ponded area is not present such as in the case of a mere wet spot around a manhole, an estimation of flow is made based upon a visual observation.

5) Orange County Sanitation District SSO Estimation Chart (for Manhole Cover Vent Holes and Pick Holes Flow)

Estimated Flows thru Manhole Cover Vent Holes and Pick Holes for SSO estimating

Hole Dia. inches	Area sq. ft.	Coeff.of Vel. Cv	Coeff. Of Cont. Cc	C Cv x Cc	Water Ht inches	Water Ht inches	Water Ht feet	Q cfs	Q gpm	Q gph
	Formula: =0.785*Ax*Ax/144			Formula: =Ix*449			Formula: =Gx/12	Formula: =Ex*Bx*(SQRT(2*32.2*Hx))	Formula: =Ix*449	Formula: =Jx*60
Vent Hole										
0.50	0.00136	0.945	0.70	0.662	1/16 th	0.063	0.005	0.0005	0.23	14
0.50	0.00136	0.945	0.70	0.662	1/8 th	0.125	0.010	0.0007	0.33	20
0.50	0.00136	0.945	0.70	0.662	1/4 th	0.250	0.021	0.0010	0.47	28
0.50	0.00136	0.945	0.70	0.662	one half	0.500	0.042	0.0015	0.66	40
0.50	0.00136	0.945	0.70	0.662	3/4 ths	0.750	0.063	0.0018	0.81	49
0.50	0.00136	0.945	0.70	0.662	1 inch	1.000	0.083	0.0021	0.94	56
0.50	0.00136	0.945	0.70	0.662	1 1/4 "	1.250	0.104	0.0023	1.05	63
0.50	0.00136	0.945	0.70	0.662	1 3/8"	1.375	0.115	0.0024	1.10	66
0.50	0.00136	0.945	0.70	0.662	1 1/2"	1.500	0.125	0.0026	1.15	69
0.50	0.00136	0.945	0.70	0.662	1 5/8"	1.625	0.135	0.0027	1.20	72
0.50	0.00136	0.945	0.70	0.662	1 3/4"	1.750	0.146	0.0028	1.24	74
0.50	0.00136	0.945	0.70	0.662	2 inches	2.000	0.167	0.0030	1.33	80
0.50	0.00136	0.945	0.70	0.662	2 1/4"	2.250	0.188	0.0031	1.41	84
0.50	0.00136	0.945	0.70	0.662	2 1/2"	2.500	0.208	0.0033	1.48	89
0.50	0.00136	0.945	0.70	0.662	2 3/4"	2.750	0.229	0.0035	1.56	93
0.50	0.00136	0.945	0.70	0.662	3 inches	3.000	0.250	0.0036	1.62	97
0.50	0.00136	0.945	0.70	0.662	3 1/4"	3.250	0.271	0.0038	1.69	101
0.50	0.00136	0.945	0.70	0.662	3 1/2"	3.500	0.292	0.0039	1.75	105
0.50	0.00136	0.945	0.70	0.662	3 3/4"	3.750	0.313	0.0040	1.82	109
0.50	0.00136	0.945	0.70	0.662	4.000	4.000	0.333	0.0042	1.88	113
Vent Hole										
0.75	0.00307	0.955	0.67	0.640	1/16 th	0.063	0.005	0.0011	0.51	31
0.75	0.00307	0.955	0.67	0.640	1/8 th	0.125	0.010	0.0016	0.72	43
0.75	0.00307	0.955	0.67	0.640	1/4 th	0.250	0.021	0.0023	1.02	61
0.75	0.00307	0.955	0.67	0.640	one half	0.500	0.042	0.0032	1.44	87
0.75	0.00307	0.955	0.67	0.640	3/4 ths	0.750	0.063	0.0039	1.77	106
0.75	0.00307	0.955	0.67	0.640	1 inch	1.000	0.083	0.0045	2.04	122
0.75	0.00307	0.955	0.67	0.640	1 1/4 "	1.250	0.104	0.0051	2.28	137
0.75	0.00307	0.955	0.67	0.640	1 3/8"	1.375	0.115	0.0053	2.39	144
0.75	0.00307	0.955	0.67	0.640	1 1/2"	1.500	0.125	0.0056	2.50	150
0.75	0.00307	0.955	0.67	0.640	1 5/8"	1.625	0.135	0.0058	2.60	156
0.75	0.00307	0.955	0.67	0.640	1 3/4"	1.750	0.146	0.0060	2.70	162
0.75	0.00307	0.955	0.67	0.640	2 inches	2.000	0.167	0.0064	2.89	173
0.75	0.00307	0.955	0.67	0.640	2 1/4"	2.250	0.188	0.0068	3.06	184
0.75	0.00307	0.955	0.67	0.640	2 1/2"	2.500	0.208	0.0072	3.23	194
0.75	0.00307	0.955	0.67	0.640	2 3/4"	2.750	0.229	0.0075	3.38	203
0.75	0.00307	0.955	0.67	0.640	3 inches	3.000	0.250	0.0079	3.53	212
0.75	0.00307	0.955	0.67	0.640	3 1/4"	3.250	0.271	0.0082	3.68	221
0.75	0.00307	0.955	0.67	0.640	3 1/2"	3.500	0.292	0.0085	3.82	229
0.75	0.00307	0.955	0.67	0.640	3 3/4"	3.750	0.313	0.0088	3.95	237
0.75	0.00307	0.955	0.67	0.640	4.000	4.000	0.333	0.0091	4.08	245
Vent Hole										
1.00	0.00545	0.960	0.65	0.624	1/16 th	0.063	0.005	0.0020	0.88	53
1.00	0.00545	0.960	0.65	0.624	1/8 th	0.125	0.010	0.0028	1.25	75
1.00	0.00545	0.960	0.65	0.624	1/4 th	0.250	0.021	0.0039	1.77	106
1.00	0.00545	0.960	0.65	0.624	one half	0.500	0.042	0.0056	2.50	150
1.00	0.00545	0.960	0.65	0.624	3/4 ths	0.750	0.063	0.0068	3.06	184
1.00	0.00545	0.960	0.65	0.624	1 inch	1.000	0.083	0.0079	3.54	212
1.00	0.00545	0.960	0.65	0.624	1 1/4 "	1.250	0.104	0.0088	3.96	237
1.00	0.00545	0.960	0.65	0.624	1 3/8"	1.375	0.115	0.0092	4.15	249
1.00	0.00545	0.960	0.65	0.624	1 1/2"	1.500	0.125	0.0097	4.33	260
1.00	0.00545	0.960	0.65	0.624	1 5/8"	1.625	0.135	0.0100	4.51	271
1.00	0.00545	0.960	0.65	0.624	1 3/4"	1.750	0.146	0.0104	4.68	281
1.00	0.00545	0.960	0.65	0.624	2 inches	2.000	0.167	0.0111	5.00	300
1.00	0.00545	0.960	0.65	0.624	2 1/4"	2.250	0.188	0.0118	5.31	318
1.00	0.00545	0.960	0.65	0.624	2 1/2"	2.500	0.208	0.0125	5.59	336
1.00	0.00545	0.960	0.65	0.624	2 3/4"	2.750	0.229	0.0131	5.87	352
1.00	0.00545	0.960	0.65	0.624	3 inches	3.000	0.250	0.0136	6.13	368

Estimated Flows thru Manhole Cover Vent Holes and Pick Holes for SSO estimating

Hole Dia. inches	Area sq. ft.	Coeff.of Vel. Cv	Coeff. Of Cont. Cc	C Cv x Cc	Water Ht inches	Water Ht inches	Water Ht feet	Q cfs	Q gpm	Q gph
	Formula: =0.785*Ax*Ax/144			Formula: =Ix*449			Formula: =Gx/12	Formula: =Ex*Bx*(SQRT(2*32.2*Hx))	Formula: =Ix*449	Formula: =Jx*60
Vent Hole										
1.00	0.00545	0.960	0.65	0.624	3 1/4"	3.250	0.271	0.0142	6.38	383
1.00	0.00545	0.960	0.65	0.624	3 1/2"	3.500	0.292	0.0147	6.62	397
1.00	0.00545	0.960	0.65	0.624	3 3/4"	3.750	0.313	0.0153	6.85	411
1.00	0.00545	0.960	0.65	0.624	4.000	4.000	0.333	0.0158	7.08	425
Pick Hole semicircular area										
1.00	0.00273	0.960	0.65	0.624	1/16 th	0.063	0.005	0.0010	0.44	27
1.00	0.00273	0.960	0.65	0.624	1/8 th	0.125	0.010	0.0014	0.63	38
1.00	0.00273	0.960	0.65	0.624	1/4 th	0.250	0.021	0.0020	0.89	53
1.00	0.00273	0.960	0.65	0.624	one half	0.500	0.042	0.0028	1.25	75
1.00	0.00273	0.960	0.65	0.624	3/4 ths	0.750	0.063	0.0034	1.53	92
1.00	0.00273	0.960	0.65	0.624	1 inch	1.000	0.083	0.0039	1.77	106
1.00	0.00273	0.960	0.65	0.624	1-1/2 inch	1.500	0.125	0.0048	2.17	130
1.00	0.00273	0.960	0.65	0.624	2 inches	2.000	0.167	0.0056	2.51	150
1.00	0.00273	0.960	0.65	0.624	2 1/4"	2.250	0.188	0.0059	2.66	159
1.00	0.00273	0.960	0.65	0.624	2 1/2"	2.500	0.208	0.0062	2.80	168
1.00	0.00273	0.960	0.65	0.624	2 3/4"	2.750	0.229	0.0065	2.94	176
1.00	0.00273	0.960	0.65	0.624	3 inches	3.000	0.250	0.0068	3.07	184
1.00	0.00273	0.960	0.65	0.624	3 1/4"	3.250	0.271	0.0071	3.19	192
1.00	0.00273	0.960	0.65	0.624	3 1/2"	3.500	0.292	0.0074	3.31	199
1.00	0.00273	0.960	0.65	0.624	3 3/4"	3.750	0.313	0.0076	3.43	206
1.00	0.00273	0.960	0.65	0.624	4.000	4.000	0.333	0.0079	3.54	213

Clean Up the Spill:

All overflow/spills must be cleaned regardless of size. Affected areas are to be washed down then vacuumed up utilizing a vactor truck to prevent sewage overflow/spills and wash water from entering waters of the state. All solids or semisolids resulting from the cleaning operations will be removed from the site and disposed at the OCSD's Treatment Plant No. 2 located in Huntington Beach. For the GGSD's records, photographs of affected area and existing damaged areas are taken for use in settling potential future claims.[3]

[3] Attached is Sewer Spill Response Form

Appendix F-1

FOG Control Program for Food Service Establishments

GARDEN GROVE SANITARY DISTRICT
FATS, OIL AND GREASE (FOG) CONTROL PROGRAM
FOR
FOOD SERVICE ESTABLISHMENTS

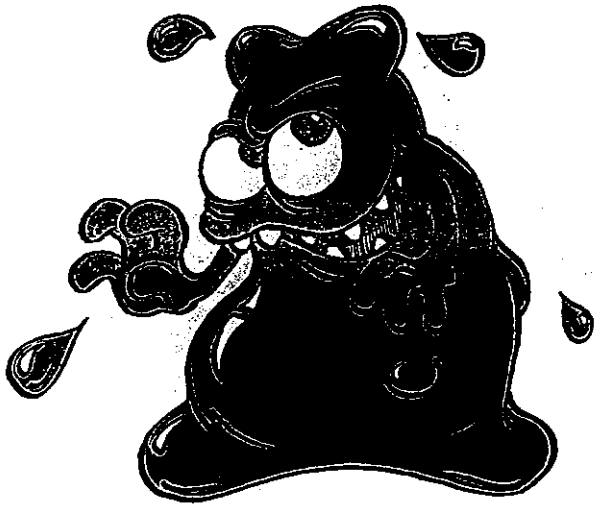

What's In Your Sink?
Help Control The Grease Monster

GARDEN GROVE SANITARY DISTRICT

GARDEN GROVE

BINDER CONTENTS

ACCESS LETTER

BMP FACT SHEET

CONTACT LIST

BROCHURES

POSTERS

GARDEN GROVE SANITARY DISTRICT
11222 ACACIA PARKWAY, P.O. BOX 3070, GARDEN GROVE, CALIFORNIA 92842

MAR 01 2004

TO: Owners and Managers of Food Service Establishments

SUBJECT: Food Service Grease Control Program

The Garden Grove Sanitary District (GGSD or District) maintains the public sewer system serving your business on behalf of the City of Garden Grove and is required under new laws to institute a comprehensive grease control program. Grease from restaurants and other food preparation businesses are causing sewer line blockages and spills. The sewer spills end up in the storm drain system and waterways and are a significant cause of ocean water pollution.

In order for the GGSD to comply with the new regulations, the District is developing a new grease control program with your assistance. The first step is for a GGSD representative to visit your facility and review the kitchen equipment, drains, grease interceptor or grease trap (if existing), maintenance logs, kitchen best management practices, spill prevention and clean up practices, the menu, grease usage, and disposal practices.

The person visiting your facility will have proper identification and a copy of this letter. This person will be an employee of EEC, a consultant to the GGSD for this project. Information will be provided on the importance of minimizing grease discharges to the sewer system and recommendations for reducing discharges.

The regulations requiring the new grease control program could include substantial fines for sewer spills and non-conformance, therefore, your cooperation is a necessity.

Thank you for your participation and cooperation. If you have any questions, please call the GGSD at (714) 741-5956.

Sincerely,

A. J. Holmon III
Environmental Services Coordinator

GARDEN GROVE SANITARY DISTRICT
11222 ACACIA PARKWAY, P.O. BOX 3070, GARDEN GROVE, CALIFORNIA 92842

Kitchen Best Management Practices (BMP's)

Sinks and Drains

Drain Screens

- Be installed on all drains
- Have openings between 1/8" and 3/16"
- Be removable for ease of cleaning
- Be frequently cleaned (dispose of the screened solids to the trash)

Grease Container Usage

- Pour all liquid oil and grease from pots, pans, and fryers into a waste grease container
- Prior to washing, scrape solidified fats and grease from pots, pans, fryers, utensils, screens, and mats into a container
- Use recycling barrels or bins with covers for onsite collection of grease and oil
- Empty grill top scrap baskets or boxes into a container

Dishwashing

- Use rubber scrapers, squeegees, or towels to remove food and all visible fats, oils and grease from cook and serving ware prior to dishwashing
- Dry wipe remaining food and fats, oils and grease into trash can prior to dishwashing

Spill Prevention and Clean-up

Proactive Spill Prevention and Clean-Up Procedure BMPs

- Develop and post spill procedures
- Develop schedule for training employees about procedures
- Designate a key employee who monitors clean-up

Spill Prevention BMPs

- Empty containers before they are full to avoid accidental spills
- Provide proper portable container to transport materials without spilling
- Use a cover to transport grease materials to a recycling barrel

Spill Clean-up BMPs

- Block off sink and floor drains near the spill
- Clean spills with towels and absorbent material
- Use wet cleanup methods only to remove trace residues

Absorbent Materials and Towel Usage

- Use disposable absorbent materials to clean areas where grease may be spilled or dripped
- When using paper towels, use food grade paper to soak up oil and grease under fryer baskets
- Use towels to wipe down work areas
- Use absorbent materials under colanders in sinks when draining excess meat fat

Food Waste Disposal/Recycling

- Used or spent oil and grease generated from fryers and other cooking equipment can be recycled through a rendering or recycling company.

Food Grinders

- Food grinders should not be used in kitchens because the resulting large volume of food solids may clog drain pipes and/or fill grease traps and interceptors.

Employee Education

- An Education Program on the BMPs should be implemented consisting of:
  - New employee training program
  - Frequent refresher training program
  - Kitchen BMP signage

Ngay 14, Thang 1, Nam 2004

THÔNG CÁO: Người Chủ và Giám Đốc của Chỗ Làm Việc Thức Ăn

VỀ: Chương Trình Chế Ngự Dầu Mỡ Cho Các Việc Làm Thức Ăn

Garden Grove Sanitary District (GGSD/District) giữ gìn hệ thống ống cống nước cho dân chúng dùng cho kinh doanh, đại diện cho thành phố Garden Grove. Theo luật mới, chính phủ phải thành lập một chương trình đầy đủ chế ngự dầu mỡ. Dầu mỡ của nhà hàng và các tiệm làm thức ăn hay làm cống dày ngăn chặn và tràn ra. Chất bẩn trong ống cống chảy vào lưu vực sông, sau đó đường sông; và là một lí do trầm trọng đã làm nước biển ô nhiễm.

Vì chính phủ theo luật mới, chính phủ đang khai triển một chủng trình chế ngự dầu mỡ cùng với sự giúp đỡ của quý vị. Bước đầu tiên là có người đại diện cho GGSD tới chỗ việc và xem xét kỹ đồ dùng trong nhà bếp, cống để thảo nước, máy bắt dầu (nếu có), sổ ghi các việc giữ gìn, phương pháp thu xếp nhà bếp, phương pháp ngăn cản sự đổ ra và quét dọn, danh sách chọn lựa thức ăn, cách dùng dầu mỡ và sự vứt bỏ.

Người đại diện mà đi xem chỗ việc sẽ có thẻ chứng minh đàng hoàng và mang theo thỏ này. Người nay làm cho hãng EEC, Inc., tư vấn của GGSD cho vụ này. Sẽ có thông tin về sự quan trọng bỏt đi dầu mỡ thả trong hệ thống cống rãnh và sử khuyên bảo.

Điều lệ mà cần chủng trình chế ngự dầu mỡ mới này sẽ có tiền phạt nặng nếu ống cống nước tràn ra và nếu không theo luật lệ, do đó, cộng tác của quý vị cần thiết.

Cám ơn cho sự tham gia và cộng tác của quý vị. Nếu có câu hỏi nào, xin liên lạc tôi tại GGSD (714) 741-5375.

Sincerely,

A.J. Holman, III

Environmental Services Coordinator

GARDEN GROVE SANITARY DISTRICT
11222 ACACIA PARKWAY, P.O. BOX 3070, GARDEN GROVE, CALIFORNIA 92842

Phương Pháp Thu Xếp Nhà Bếp (BMPs)

Hồ Rửa Chén Bát Và Cống Tháo Nước

Đồ che cống tháo nước

- Xếp đặt trên tất cả cống tháo nước
- Sẽ có lỗ giữa 1/8" và 3/16"
- Sẽ tháo ra được để rửa dễ dàng
- Sẽ rửa thường xuyên (vứt những đồ lọc trong thùng rác

Cách Dùng Bình Đựng Dầu Mỡ

- Đổ tất cả nước dầu mỡ từ chạu và chảo vào trong bình đựng dầu mỡ thừa
- Trước khi rửa, chà mập mỡ và dầu mỡ đã đặc lại ra chạu, chảo, đồ dùng, đồ che, và thảm trải vào trong bình
- Dùng lại thùng có nắp đậy để lấy được mỡ và dầu trên địa điểm
- Đổ ra vật thừa thải trong rổ hoặc thùng nướng bếp vào trong bình

Rửa Chén Bát

- Dùng đồ cạo loại cao su và cái chốt bằng cao su hoặc hay là khăn để tẩy sạch đồ ăn và tất cả dầu mỡ trong thấy được ra các đồ dùng nấu ăn trước khi rửa chén
- Lau khô đồ ăn thừa, vã dầu mỡ vào trong thùng rác trước khi rửa chén

Phương Pháp Ngăn Cản Sự Tràn Ra Và Quét Dọn

Phương thức thực hành cho sự tràn ra ngăn cản và quét dọn

- Khai triển và dán lên phương thức sự tràn ra
- Xếp đặt chương trình để luyện tập công nhân về phương thức
- Chỉ định một công nhân chính để kiểm thính việc quét dọn

Ngăn cản sự tràn ra

- Đổ ra bình trước khi dầy để tránh đánh đổ bất ngờ
- Sửa soạn thùng đang hoạn để chuyển chỗ đồ để không đổ ra
- Dùng nắp lúc chuyển chỗ đồ dầu mỡ tới hộp dùng lại

Quét Dọn Sự Tràn Ra BMPs

- Cản ra cống thảo nước ở trong hồ rửa chén và dưới dắt gần chỗ dánh đổ ra
- Dọn nước đổ ra với khăn và đồ thấm
- Dùng cách quét dọn đồ ướt chỉ lấy ra vật dư còn lại

<u>Cách Dùng Đồ Thấm Và Khăn Lau</u>

- Dùng đồ thấm có thể bỏ đi không xài nữa để dọn chỗ mà dầu mỡ có thể đổ hay chảy ra nhỏ ra
- Lúc dùng khăn lau, dùng giấy loại dùng cho đồ ăn để làm thấm dầu mỡ ở dưới rổ chiên
- Dùng đồ thấm ở dưới rá lọc trong hồ rửa chén lúc rút thịt mỡ thừa

<u>Vứt Bỏ Đồ Ăn Và Sử Dụng Lại</u>

- Dầu mỡ từ chảo chiên và đồ nấu khác có thể dùng lại qua hãng tái chế

<u>Máy Xay Đồ Ăn</u>

- Máy xay đồ ăn sẽ không được dùng trong nhà bếp tại vì có nhiều vật dư thừa đồ ăn có thể đóng nẹt ống tháo nước và/ hoặc hay là làm đầy máy bắt dầu mỡ

<u>Huấn Luyện Công Nhân</u>

- Sẽ làm cho xong Chương Trình Học Thức về BMPs gồm có:
- Chương trình huấn luyện cho công nhân mới
- Chương trình huấn luyện ôn lại thường xuyên
- Làm bảng cho nhà bếp BMP

March 1, 2004

PARA: Dueños y Gerentes De Establecimientos De Servicios De Comida
SUBJETO: Programa Nuevo Para El Control De Grasas

El Distrito Sanitario de la Ciudad de Garden Grove (GGSD ó El Distrito) mantienen el servicio publico de el alcantarillado que sirve su negocio de parte de la Ciudad de Garden Grove, y esta requirido bajo nuevas leyes de instituir un programa comprensivo de control de grasas. Grasas que vienen de restauranes y de otros negocios de preparacion de comida estan causando obstrucciones o derrames en las lineas de la alcantarilla. Los derrames que vienen de la alcantarilla terminan en el sistema de drenaje de lluvias y desvios de agua, los cuales son una causa significante de la contaminacion del agua del mar.

En orden para que el GGSD pueda compluir con las nuevas regulaciones, El Distrito esta desarrollando un nuevo programa para el control de grasas con su ayuda. El primer paso comienza con un representante del GGSD visitando su establecimiento para revisar su equipaje de cocina, desagues, interceptores de grasas (si existen), constancias de mantenimiento, buenas practicas de manejamiento de cocina, prevencion de derrames, practicas de limpieza, el menu, uso de grasas, y metodos de eliminacion de basura.

La persona que visite su establecimiento tendra identificacion apropriada y una copia de esta carta. Esta persona sera un empleado de la firma EEC, quienes estan sirviendo como consultores para el GGSD en este proyecto. Informacion se hara disponible sobre la importancia de minimizar los descargos de grasa que llegan al sistema de la alcantarilla, como tambien recomendaciones para reducir estos descargos.

Las regulaciones requiriendo el nuevo programa de control de grasas podrian incluir multas considerables por descargos a la alcantarilla y por no conformar con las regulaciones. Por eso, su cooperacion es muy importante y necesario.

Gracias por su participacion y cooperacion. Si tiene qualquier pregunta, porfavor llame al GGSD al 714-742-5375.

Sinceramentc,

A. J. Holmon III
Coordinador De Servicios Ambientales

식당 관계자에게 알립니다 March 1, 2004

배출하는 폐유를 규칙적으로 처리 합시다

가든그로브 위생 관리처 (Garden Grove Sanitary District) 는 업소 와 거주에서 사용 하는 공동 하수도를 관리함으로 여러분에게 이 편지를 보냅니다. 식당에서 내보내는 폐유가 오래되면 거리로 나가는 하수도 가 막히면서 오염이 여러군데로 퍼지고 또 직접바다로 흘러내려가 모든 환경을 파괴합니다. 앞으로 깨끗한 환경을 유지하기 위한 세로운 법을 여러분께서 지켜야 합니다.

가든 그로브 위생 관리처 (GGSD) 는 새로 세워진 법을 지키기 위하여 여러분 의 협조가 필요합니다. 첫째로, 위생 관계자들이 여러분 식당에 시찰하여 주방에 있는 도구, 배수설비, 유지를 걸러낼 수 있는 장치 가 준비되여있나 살표볼것입니다.

그리고 식당에 일람표 가있어 주방을 규칙적으로 종업원들이 깨끗이 정리하는 것을 기록하고 또 식당에서 제공하는 음식이 폐유를 많이 버리는 종류인가 살펴볼 예정입니다. 그리고 만약하수도가 폐유로 막히면 어떤방법으로 처리할수있나 위생관계자 에게 보여드려야 하며, 마지막으로 여러분이 어떤방법으로 유지 처리하나 질문할것입니다.

가든그로브 시 는 식당 "위생 환경회사" (Enviromental Engineering Contract Inc) 와 계약되여 이 회사 직원위생 관계자가 여러분 식당에 들려 주방을 검사할예정이며, 관계자께서는 그의 신임장 신분증과 이 편지를 여러분에게 보여드릴것입니다.

새로 계획한 폐유 감소 사항에 여러분의 협조가 필요하며 잘지켜주십시오. 앞으로 법을 위반하게 되면 벌금을 지불하게됩니다.

여러분의 협력을 간청하며 질문이 있으시면 가든그로브 위생 행정부로 연락하시고 또 언어에 어려운점이 있으시면 경찰국 유태경 에게 연락하십시오.

A.J. Holmon

GGSD: 741-5375

A.J. Holmon 드림

유태경: 741-5592

GARDEN GROVE SANITARY DISTRICT
11222 ACACIA PARKWAY, P.O. BOX 3070, GARDEN GROVE, CALIFORNIA 92842

주방을 제일 깨끗하게 관리하는 방법

배수 찌꺼기 채

모든배수에 배수채를 끼십시오.
배수채의 구멍사이는 1/8~3/16 인치가 되는 것을 사용하십시오.
채는 이동적인 것을 사용하여 쉽게 뺏다 낄수있어야 합니다.
채에 찌꺼기가 많이 모이면 쓰레기 통으로 버리십시오.

유지 통 사용 방법

냄비나 접시에서 버리는 액체 와 굳은유지 는 커다란 폐유통에
배치하십시오.
설거지 하기전에 미리 냄비나 접시에 굳어있거나 묻어있는 유지는
휴지를 이용하여 닦아 내십시오.
유지를 재생하는 통에 넣으시고 채워지면 재생회사에
연락하여 처리하는 방법으로 하십시오.
석쇠에 눌러붙은 찌꺼기를 긁어낸다음 쓰레기통에 배치하십시오.

설거지

접시에 남아있는 음식, 또는 주방 도구 등을 설거지하기 전에
묻어있는 유지를 종이행주를 사용하여 잘닦아내십시오.

배수관 유출

미리 배수관 유출 때 쉽게 처리할수있게 준비하십시오.
종업원들에게 유출에 관한방법을 미리 알려 주십시오.
종업원중에 유출 때 감시할 수 있는 사람을 정해놓으십시오.

유출당시에

주방에 쉽게 이동 할 수 있는 유지통이 있어야 하며 운반할 때 흘리지 않도록 조심하십시오.

유지재생통을 이동할 때 통뚜껑을 덮고 유지재생통으로 옮기십시오.

유지재생통을 실수로 쓸어트리면 바닥에 유지를 흘릴수가있으니 유지재생 통에 유지가 다차기 전에 미리 배치하십시오.

만약 유지재생통이 실수로 쓸어지면 주방바닥에 내려가는 배수관이 있으면 흘러내려가지 않도록 걸래로 막으십시오.

하수오물이나 잔여 물을 딱으실때는 물이나 청소하는 세제로 닦으십시오.

물질흡수하는 도구 와 천종류 의 걸래

흘린폐유를 치우실때는 사용후 버릴 수 있는 흡수하는 종이나 걸래를 사용하십시오.

튀김 이나 기름이 흐르는 음식 밑에는 기름을 흡수하는 종이행주를 사용하십시오.

요리 하는 근처 치우실때는 종이, 또는 깨끗한 천종류의 행주를 사용하십시오.

요리한 음식에서 기름이 많이 흘르면 여과기를 사용하고 밑에는 종이행주로 바치십시오.

버리는 음식 과 유지재생

버리는 요리기름 이나 도구들은 유지재생 회사에서 갖고갑니다.

음식 가는기계

음식가는 기계에 많은 찌꺼기를 깨끗지 딱아 낸다음 물로 씻어내시고 배수관으로 내려가는 곳에 찌꺼기 걷어내는 채를 끼여 놓으십시오.

종업원 가르키기

주방에서 위생적으로 일할 수 있는 방법 은 새로 채용한 종업원이 자세히 유지에 관한점을 알아야 합니다.

가끔 일하시는 분들은 위생에 관한 것을 반복하십시오.

규칙의 기호를 종업원들이 볼수있게 걸어놓으십시오.

GREASE TRAP / INTERCEPTOR MAINTENANCE LOG

FACILITY NAME: LOCATION:

DATE	SERVICED BY WHOM	TYPE OF SERVICE (pumping/hauling, repair, etc.)	Disposal Site (if known)	Volume Pumped	SERVICE COMMENTS (volume pumped, problems, etc.)

LATERAL SEWER LINE MAINTENANCE LOG

FACILITY NAME: **LOCATION:**

DATE	SERVICED BY WHOM	TYPE OF SERVICE (rodding, jetting, repair, etc.)	SERVICE COMMENTS (problems, observations, etc.)

EMPLOYEE BMP TRAINING LOG

FACILITY NAME: **LOCATION:**

EMPLOYEE NAME	INITIAL TRAINING DATE	REFRESHER TRAINING			

RECYCLABLE GREASE (YELLOW GREASE) PICKUP / DISPOSAL LOG

FACILITY NAME:

DATE	PICKED UP BY WHOM	SERVICE COMMENTS (volume collected, etc.)

GARDEN GROVE

CITY OF GARDEN GROVE
PUBLIC WORKS

William J. Dalton
Mayor

Mark Rosen
Mayor Pro Tem

Harry J. Krebs
Council Member

Mark Leyes
Council Member

Janet Nguyen
Council Member

February 15, 2005

Dear Food Service Establishment,

Grease is the number one cause of sewer line blockage. Grease from restaurants and food establishments hardens in the lines and blocks the flow, causing backups and sewer spills. These spills can enter the storm drain and pollute the ocean, causing beach closures.

Renderers are companies that collect Fats, Oil, Grease (FOG) from Food Service Establishments (FSEs). The renderer then properly disposes of the collected grease.

The 2 most common products rendered from an FSE are yellow grease and brown grease.

- Yellow grease: from bulk deep fat frying operations and oil/water separator units.
- Brown grease: from grease traps and interceptor waste.

The following businesses provide rendering services. Please note that the City of Garden Grove does not endorse the following contractors and their services:

Baker Commodities
4020 Bandini Blvd.
Los Angeles, CA 90023
(323) 269-6177

Darling International
P.O.Box 58725
Los Angeles, CA 90058
(213) 680-8963

OCP (Orange County Pumping)
P.O. Box 10415
Santa Ana, CA 92711-0415
714-505-9662

Martinez Pumping Grease Trap Service
P.O.Box 39144
Downey, CA 90239
(626) 625-6051

Martin Feed & Cattle, Inc.
7080 Summer Ave.
Corona, CA 92880
(909) 737-7617

Triple "A" Pumping & Jetting Services, Inc.
P.O. Box 54026
Irvine, CA 92619
(949) 855-7836

Southwest Processors
4120 Bandini Blvd.
Los Angeles, CA 90023
(323) 269-9876

Coast Packing Company
P.O.Box 58918
Vernon, CA 90058
(323) 277-7700

S.M.C. Grease Specialist
P.O. Box 1343
Corona, CA 92878
951-788-6042

To insure proper disposal of your grease, we encourage you to use the services of a grease renderer.

If you have any questions, please contact me at (714) 741-5564.

Sincerely,

Amabelle S. Padilla
Sr. Environmental Services Specialist

GARDEN GROVE SANITARY DISTRICT
11222 ACACIA PARKWAY, P.O. BOX 3070, GARDEN GROVE, CALIFORNIA 92842

WHAT'S IN YOUR SEWER? HELP CONTROL THE GREASE MONSTER

GARDEN GROVE SANITARY DISTRICT (GGSD)
CONTACT LIST – WHO TO CALL

GARDEN GROVE SANITARY DISTRICT (GGSD)/CITY OF GARDEN GROVE
(Sewer Spills/Overflows/Back-ups)

Phone: (714) 741-5395

After Hours: (714) 741-5704

GARDEN GROVE SANITARY DISTRICT (GGSD) FOG PROGRAM
(Administration/Inspections):

Phone: (714) 741-5375 7:30 p.m. to 5:30 p.m. Monday-Friday

OTHER IMPORTANT PHONE NUMBERS

Orange County Healthcare Agency (Environmental Health Section)

Phone: (714) 667-3600

After Hours: (714) 628-7008

County of Orange RDMD (storm drain)

Phone: (714) 567-6363

After Hours: (714) 628-7008 Control 1

Regional Water Quality Control Board – Santa Ana Region

Phone: (909) 782-4130

After Hours: (800) 852-7550 Office of Emergency Services

Appendix F-2

FOG Informational Handouts



Spill Response Agencies

City of Garden Grove Fire Department
(714) 741-5600
or if there is an emergency dial 911

City of Garden Grove Environmental Compliance Division (714) 741-5375

Orange County Resources and Development Management Department (714) 567-6363

Household Hazardous Waste Disposal

City of Garden Grove Department of Public Works
(714) 741-5375

Report Illegal Dumping

City of Garden Grove Environmental Compliance Division (714) 741-5375

To Report a Clogged Catch Basin

City of Garden Grove Department of Public Works
(714) 711-5375

For more information about storm drain protection or additional brochures, please call the City of Garden Grove Public Works Department at (714) 741-5375.

This brochure is one of a series of pamphlets describing storm drain protection measures.

Pamphlets include:

- Painting
- Food Service Industry
- Fresh Concrete and Mortar Application
- General Construction and Site Supervision
- Heavy Equipment and Earth Moving Activities
- Landscaping, Gardening and Pest Control
- Home Repair and Remodeling
- Automotive Maintenance and Car Care
- Roadwork and Paving.

GARDEN GROVE

Published by:
City of Garden Grove
Public Works Department
Environmental Compliance Division

Preventing Storm Water Pollution During

Maintenance Practices for Your Business



A guide for:

- Commercial Businesses
- Industrial Businesses
- Property Management Companies
- Commercial and Industrial Property Owners

Ocean Pollution Prevention: It's Up To Us

Garden Grove has two drainage systems; sewers and storm drains. The storm drain system was designed to prevent flooding by carrying excess rainwater away from city streets out to the ocean. Because the system contains no filters, it now serves the unintended function of carrying urban pollution straight to the ocean.

This pamphlet tells you how to prevent ocean pollution from "stormwater" or "urban runoff."
Rain, industrial and household water mixed with pollutants creates stormwater pollution. The pollutants include: oil and other automotive fluids, paint and construction debris, yard and pet wastes, pesticides and litter.

Urban runoff pollution flows to the ocean through the storm drain system, which takes water and debris straight from the streets to the ocean. Each day 100 million gallons of polluted urban runoff enter the ocean untreated, leaving toxic chemicals in our surf and tons of trash on our beaches.
Urban runoff pollution contaminates the ocean, closes beaches, harms aquatic life and increases the risk of inland flooding by clogging gutters and catch basins.

These Best Management Practices (BMPs) will ensure a cleaner city and ocean.

Business Maintenance Problems:

Common business maintenance practices include outdoor area washing, outdoor storage of materials and routine parking lot cleaning. All of these activities can contribute to urban runoff and ocean pollution if not conducted or managed properly.
Materials and wastes blown or washed into a street, gutter or storm drain have direct impacts on the ocean.

Pollution from parking lots and outdoor area washing include sediment, oil, litter, pesticides and heavy metals. Sediment can clog the gills of fish, block light transmission and increase ocean water temperatures, all of which harm sea life, disrupting the food chain upon which both fish and people depend.

Solutions:

Keep Work Areas Clean

- Handling, storing and disposing of materials properly can prevent pollutants from entering the storm drains.

Cleaning Outdoor Areas

- If you wash your building, sidewalk or parking lot, you must contain the water. Use a shop vac to collect the water and contact the Garden Grove Sanitary District at (714) 741-5090 for proper disposal information. Do not allow the wash water to enter the street, gutter or storm drain.
- Use a damp mop, broom or scrub brush to clean floors and sidewalks.

Landscape Maintenance

- Compost grass clippings, leaves and sticks. Do not sweep or hose vegetative clippings to the street, gutter or storm drain.
- Irrigate slowly and inspect the irrigation system for leaks, overspray and runoff. Report problems to the property management.
- Do not apply fertilizers or pesticides with in 100 feet of waterways or if rain is expected within 48 hours.

Handling Materials & Wastes

- Do not dump any toxic substance or liquid waste on the pavement, ground or near a storm drain. Even materials that seem harmless such as latex paint or biodegradable cleaners can damage the environment.
- Call your trash hauler to replace leaking dumpsters or dumpsters missing lids.
- Keep dumpster lids closed. This prevents litter and trash from blowing out of the dumpster and rainwater from entering the dumpster.
- Keep the area around the dumpster clear of trash and debris. Do not overfill the dumpster.

Material Storage

- Store materials indoors or undercover and away from storm drains.
- Properly label materials and wastes. Educate employees with Material Safety Data Sheets.
- Place all 55 gallon drums on secondary containment pallets or in a bermed area.

Spills

- Do not hose down or use water on spills.
- Use dry cleaning methods to clean up dry spills, such as sweeping or mopping.
- Use cat litter, towels or rags to absorb wet spills. Dispose of all non-hazardous waste into the trash and hazardous waste appropriately.
- Prepare and use spill clean up kits in areas where hazardous or liquid wastes are stored. Include safety equipment and clean up materials appropriate to the type and quantity of material that could spill. Pour cat litter, sawdust or cornmeal on spills.

Employee & Customer Education

- Educate your employees. Include water quality training in new employee orientation and conduct annual review sessions.
- Educate your customers. Raise both employee and customer awareness by stenciling storm drains near the work place with the stencil: "No Dumping: This Drains to the Ocean."

Recycle

- Recycle all paper wastes, ink cartridges, glass and aluminum. Request recycle dumpsters from the property management.
- Recycle paints, solvents and other materials. For more information about recycling and collection centers, visit **www.oclandfills.com**

Ocean Pollution Prevention: It's Up To Us



Garden Grove has two drainage systems; one is the sewer system and the other is the storm drain system. The sewer system carries away wastes from indoor areas, such as sinks and toilets, to a treatment plant where it is cleaned prior to discharging to the ocean. The storm drain system is designed to prevent flooding by carrying excess rainwater away from city streets out to the ocean. Because the system contains no filters, it now serves the unintended function of carrying urban pollution straight to the ocean.

This pamphlet tells you how to prevent ocean pollution from "stormwater" or "urban runoff."

Rain, industrial and household water mixed with pollutants creates stormwater pollution. The pollutants include: oil and other automotive fluids, paint and construction debris, yard and pet wastes, pesticides and litter.

Urban runoff pollution flows to the ocean through the storm drain system, which takes water and debris straight from the streets to the ocean. Each day 100 million gallons of polluted urban runoff enter the ocean untreated, leaving toxic chemicals in our surf and tons of trash on our beaches.

Urban runoff pollution contaminates the ocean, closes beaches, harms aquatic life and increases the risk of inland flooding by clogging gutters and catch basins.

Use of the Best Management Practices (BMPs) explained in this brochure will aid in assuring a cleaner city, protection of human health and water quality and prevention of ocean pollution.

Food Service Establishment Maintenance Problems:

Common food service establishment maintenance practices include cleaning kitchen equipment, disposing of waste cooking oil, cleaning outdoor areas and dish washing. All of these activities can contribute to urban runoff and ocean pollution if not conducted or managed properly. Materials and wastes washed or discharged into the street, gutter or storm drains have direct impacts on the ocean.

Solutions:

Cleaning Kitchen Equipment

- Wipe off fats, oils and grease (FOG) and food residues from kitchen equipment, such as floor mats, hood filters and cooking equipment, prior to washing in the sink. Do not wash off any kitchen equipment or trash cans in an outdoor area where the wash water can flow to a street, parking lot or storm drain.
- All waste FOG and food scraps that have been wiped from cooking equipment should be thrown into the trash, not washed down the sink.

Washing Dishes

- Wipe off all utensils and dishes into a trashcan prior to washing.
- Place mesh screens in all sinks and floor drains to prevent food scraps from being washed down into the sewer system.
- All food grinders or garbage disposal devices are required to be removed.

Grease and Waste Oil Disposal

- Grease control devices, such as grease traps and grease interceptors, provide the function of removing latent FOG and suspended food particles from wash water. Grease control devices will facilitate the separation of FOG and food particles so only water can pass through to the sewer system.
- All grease traps and grease interceptors are required to be pumped out by a permitted company at least once every 6 months.
- All waste oil should be drained into a waste oil drum, not down the sink or thrown into a trashcan or dumpster. Waste oil containers should be kept clean and covered with a lid at all times. If possible, store the waste oil drum inside of a building or in an enclosure.
- Prevent spills of waste oil by not overfilling waste oil containers.
- When employees are disposing of waste oil into designated containers, prevent spills be carrying out smaller loads of waste oil for disposal.
- All receipts for waste oil pick up and grease control device cleaning should be kept for review by inspectors.
- For a list of waste oil recycling companies please visit www.ciwmb.ca.gov/foodwaste/renderer.htm or call Garden Grove Environmental Compliance Division at (714) 741-5375.

Spill Clean-Up

- Use dry clean up methods, like sweeping, wiping or mopping, to clean up spills.
- Never wash or hose down spills to the street, gutter, parking lot or other outdoor area.
- Always have a spill kit readily available for immediate response to clean up spills. Spill kits should include an absorbent material, gloves and rags. All employees should be trained on the proper use of spill kit contents and spill clean up procedures.
- If the spill travels off of your facility property, please call (714) 741-5375.

Outdoor Area Cleaning

- If any outdoor area, including sidewalks, outdoor seating, dumpster areas or outdoor storage areas need to be cleaned use dry cleaning methods, like sweeping.
- If any outdoor area needs to be cleaned with a liquid, it should first be swept to remove all dirt, trash and debris from the area. Then use a mop or scrub brush to clean areas where needed. Never hose off outdoor areas or allow wash water to travel off of your property.

Dumpster Area Maintenance

- Sweep up and remove all trash and debris from the dumpster area floor and surrounding the dumpster area.
- When employees are not in the process of disposing of trash or waste oil, keep dumpster lids and waste oil container lids closed.
- Do not pour liquids into dumpsters and double bag all leaking trash bags that are going to be disposed of in the dumpster.

Washwater Disposal

- Dispose of all washwater, like mop water, into a mop sink or sewer drain.
- Never throw washwater out in a parking lot, street, alley or storm drain.

Sewer Spills

- A sewer spill that is from a restaurant usually is caused by FOG. When FOG is washed down sinks it sticks to the sides of sewer pipes and builds up, reducing the capacity of the sewer line and eventually a sewer spill occurs.
- If your food service establishment has a sewer spill or you notice water flowing out from a grease control device, a manhole or sewer cleanout in the parking lot or street you are required to contact the City immediately at (714) 741-5375 or after hours at (714) 741-5704.
- Sewer spills present a hazard to human health, water quality and the environment.



Spill Response Agencies

City of Garden Grove Fire Department
(714) 741-5600
or if there is an emergency dial 911

City of Garden Grove Environmental Compliance Division (714) 741-5375

Orange County Resources and Development Management Department (877) 89-SPILL

Household Hazardous Waste Disposal

City of Garden Grove Public Works Department
(714) 741-5375

Report Illegal Dumping

City of Garden Grove
Environmental Compliance Division
(714) 741-5375

To Report a Clogged Catch Basin

City of Garden Grove Public Works Department
(714) 741-5375

For more information about storm drain protection or additional brochures, please call the City of Garden Grove Public Works Department at (714) 741-5375 or visit **www.garden-grove.org/storm.**

This brochure is one of a series of pamphlets describing storm drain protection measures.

Pamphlets include:

- Automotive Maintenance
- Food Service Establishments
- Fresh Concrete and Mortar Application
- General Construction and Site Supervision
- Heavy Equipment and Earth Moving Activities
- Home Repair and Remodeling
- Landscaping, Gardening and Pest Control
- Maintenance Practices for Your Business
- Painting
- Pet Waste
- Pool Maintenance
- Roadwork and Paving

GARDEN GROVE

Published by:
City of Garden Grove
Public Works Department
Environmental Compliance Division

Preventing Storm Water Pollution At

Food Service Establishments



A guide for:

- Restaurants
- Grocery Stores
- Cafeterias

- Hood filters, fry baskets, grill tops, grill top scrap baskets and cooking surfaces should be sprayed with degreaser and be wiped down prior to washing.
- Train staff on proper kitchen maintenance procedures (i.e. dishwashing, grease spill control, equipment cleaning etc.) to ensure excess grease is not entering the sewer. Employees should be trained at least 1 time per year, and documentation of the training should be made available for inspectors to review.
- Grease control devices, such as a grease interceptor or grease trap, should be serviced at a minimum of every six months. Keep receipts and documentation of grease control device servicing and pumping available for inspectors to review.
- If your facility does not have a grease control device, it is recommended that you regularly service your private sewer line by hydrojetting or using a snake/cable.
- If your food service establishment has a sewer spill or you notice water flowing out from a grease control device or a manhole or sewer cleanout in the parking lot or street, you are required to Contact the City immediately at (714) 741-5375 or after hours at (714) 741-5704.

The State now requires that the City of Garden Grove enforce limitations on the amount of FOG and other debris that enters the sewer system. If your food service establishment is not implementing proper maintenance procedures to prevent FOG from entering the sewer system and a sewer spill occurs, you may be subject to fines and the City may seek to recover expenses incurred from the cleanup of your facilities sewer spill.

Preventing FOG from entering the sewer system from your food service establishment by implementing these kitchen best management practices will reduce the likeliness of sewer spills occurring and potential fines being levied.

For questions regarding sewer spills or to request training material, contact the Environmental Compliance Division at (714) 741-5375 or Garden Grove Sanitary District at (714) 741-5395.

GARDEN GROVE SANITARY DISTRICT

13802 Newhope Street
Garden Grove, CA 92843

Phone: 714-741-5395
Fax: 714-638-9906
Email: PublicWorks@ci.garden-grove.ca.us
Website: www.garden-grove.org/storm

GARDEN GROVE SANITARY DISTRICT

SEWER SPILL PREVENTION

for Households and Food Services Establishments



What Causes Sewer Blockages?

Sanitary sewer systems are designed to handle used water, human body waste and toilet paper. When fats, oils and grease enter the system, sewer blockages may occur. Based on sewer spill reports, most sewer blockages are caused by **fats, oils and grease (FOG).**

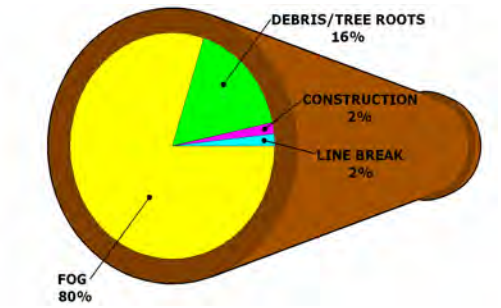

FOG can harden along the walls of the sewer lines and block the flow, causing backups, overflows and sewer spills. These backups are dangerous because sewage can enter the storm drains, which flow untreated to the ocean and ultimately these backups can cause beach closures, affect public health and the health of the environment.

Helpful Tips For Households

- Pour cooking oil into waste-grease cans for disposal. You can refrigerate used grease in a container until its ready for disposal.

BEFORE WASHING DISHES:

- Scrape off all dishes, grills, cooking surfaces and dry wipe remaining food and FOG into trashcans.
- Dispose of spent oil and grease generated from cooking equipment into waste-grease cans.

- Do not use hot water and soap to wash grease down the drain.
- Place a drain screen in sink/shower to catch solids/hair.

DO NOT USE TOILET AS A TRASH CAN:

- Use TRASH CAN for meat scraps, fat, leftovers, coffee grounds, egg shells, cat litter, baby diapers, baby wipes, feminine napkins, hair, cotton balls, Q-Tips and Kleenex.

INSPECT YOUR YARD FOR SIGNS OF POSSIBLE TREE ROOT INSTRUSION:

- Periodically have your service laterals cleaned out. Invasive tree roots and grease are the biggest causes of sewer blockages.

REMINDER

Property owners are responsible for the maintenance, repair, and cleaning of the sewer lateral from the house to the public sewer system.

WHAT IS THE CITY DOING?

The mission of the Garden Grove Sanitary District is to continue to adequately address the sewer system's capacity and structural deficiencies and comply with the State Waste Discharge Requirements. A Capital Improvement Plan was developed in accordance with findings contained in the District's System Evaluation and Capacity Assurance Plan and it's Sewer System Rehabilitation Plan. As part of the Capital Improvement Plan, an ongoing schedule of sewer improvements at various site locations are in progress to address the deficiencies that will in turn; decrease the potential of having Sanitary Sewer Overflows and enable development throughout the City.

Helpful Tips For Food Service Establishments

- Place screens in all drains, including mop sinks, floor drains, multi-compartment prep sinks and hand sinks.
- Employees should practice scraping off all dishes and dry wiping remaining food and FOG into trashcans prior to dishwashing.
- Food grinders (garbage disposals) should not be used in kitchens because the resulting large volume of food solids may clog sewer lines and/or fill grease traps and interceptors.
- Dispose of spent oil and grease generated from fryers and other cooking equipment into waste oil containers. Keep receipts and documentation of waste oil disposal available for inspectors to review.

Appendix F-3

Certified Liquid Wastehauler Vehicles

Registered Liquid Wastehauler Vehicles

County of Orange, Health Care Agency, Environmental Health
1241 E. Dyer Road, Ste. 120 Santa Ana, CA 92705
(714) 433-6287
This listing can also be found on the web at:
http://ochealthinfo.com/civicax/filebank/blobdload.aspx?BlobID=14743

NOTE: This listing is for informational purposes only and does not constitute an endorsement or guarantee of any company or service that may be provided. Companies listed may have had one or more Liquid Waste Hauling Vehicles inspected and legally registered by this Agency. Registrations are valid through December 31, 2015.

Company Name	Business Phone:	Each Company Indicated The Following Services Were Available:								
		Grease Interceptor	Grease Trap	Chemical Toilet	Septic Tank	Holding Tank/ Cesspool	Pipeline Blockage	Clarifier	Boat/ Ship	Rec. Vehicle
Los Indios Party Rental and Porta	714-478-4544	☐	☐	☑	☐	☐	☐	☐	☐	☐
Martinez Pumping	(626) 625-6051	☐	☑	☐	☐	☐	☐	☐	☐	☐
OCBioFuel	(949) 289-5504	☑	☑	☐	☐	☐	☐	☑	☐	☐
Ameriguard Maintenance Service	(800) 347-7876	☑	☑	☐	☐	☐	☐	☐	☐	☐
O.C. Vacuum, Inc.	(562) 984-8178	☐	☐	☐	☑	☐	☑	☑	☐	☐
Diamond Environmental	(760) 744-7191	☐	☐	☑	☑	☐	☐	☐	☐	☑
C&A Cesspool & Septic Tank	(714) 554-6582	☑	☑	☑	☐	☐	☐	☐	☐	☑
Golden State Pumping	(800) 491-1461	☐	☐	☑	☑	☐	☐	☐	☐	☑
Jimni Systems, Inc.	(949) 770-7654	☑	☑	☐	☑	☐	☐	☑	☐	☐
Mobile Harbor Services - Newport	(949) 515-8658	☐	☐	☐	☐	☐	☐	☐	☑	☐
Rightway Portable Toilets	(951) 674-8608	☐	☐	☑	☐	☐	☐	☐	☐	☐
LA Grease Solutions	(323) 232-2629	☑	☑	☐	☐	☐	☐	☐	☐	☐
AAA Septic	(714) 836-6621	☐	☑	☐	☑	☑	☑	☐	☑	☑
Robert's Waste & Recycling	(714) 557-2533	☐	☐	☑	☐	☐	☐	☐	☑	☑
A & J Portables, Inc	(562) 299-8582	☐	☐	☑	☐	☐	☐	☐	☐	☐
Triple "A" Pumping, Inc.	(714) 628-0900	☑	☑	☐	☑	☑	☑	☑	☐	☐
Clean Harbors Environmental Ser	(310) 764-5851	☑	☑	☐	☑	☑	☐	☑	☐	☐
Buster Biofuels	(760) 294-9400	☑	☑	☐	☐	☐	☐	☐	☐	☐
A-1 Septic	(714) 779-0775	☑	☑	☐	☑	☑	☑	☐	☐	☑
National Construction Rentals	(714) 285-0243	☐	☐	☑	☐	☐	☐	☐	☐	☐
So Cal Sanitation, LLC	(800) 850-8871	☐	☐	☑	☑	☐	☐	☐	☐	☐
Liquid Environmental Solutions	(858) 481-8106	☑	☑	☐	☐	☐	☐	☐	☐	☐
A-Throne	(562) 981-1197	☐	☐	☑	☑	☐	☐	☐	☐	☐
1st Jon, Inc.	(714) 529-8646	☐	☐	☑	☑	☐	☐	☐	☐	☑
R.E. Commodities	(951) 830-7315	☑	☑	☐	☐	☐	☐	☐	☐	☐
JN Grease Service	(951) 343-1221	☑	☑	☐	☐	☐	☐	☑	☐	☐
Right Angle Solutions Inc	(951) 934-3081	☑	☑	☑	☑	☑	☑	☑	☑	☑
Andy Gump, Inc.	(661) 251-7721	☐	☐	☑	☐	☐	☐	☐	☐	☐

RELEASE DATE: March 10, 2015

Company Name	Business Phone:	Each Company Indicated The Following Services Were Available:								
		Grease Interceptor	Grease Trap	Chemical Toilet	Septic Tank	Holding Tank/ Cesspool	Pipeline Blockage	Clarifier	Boat/ Ship	Rec. Vehicle
Universal Waste Systems, Inc.	(562) 941-4900	☑	☑	☑	☑	☑	☐	☑	☐	☑
American Environmental, Inc.	(800) 669-2783	☑	☑	☐	☑	☑	☑	☑	☐	☐
G.G. Garcia Plumbing, Pumping	(714) 744-8912	☑	☑	☑	☑	☐	☑	☐	☐	☐
Ocean Blue Environmental Svs	(562) 624-4120	☑	☑	☑	☑	☑	☑	☑	☑	☑
Pumpty Dumpty	(714) 585-1969	☐	☐	☐	☐	☐	☐	☐	☑	☐
West Coast Environmental Servic	909-465-5800/9	☑	☑	☐	☑	☐	☐	☑	☐	☐
Orange County Pumping	(714) 505-9662	☑	☑	☐	☑	☑	☑	☑	☐	☑
Darling International	(714) 556-7867	☑	☑	☐	☑	☐	☐	☑	☐	☐
A-1 Coast Temporary Services	(310) 325-3300	☐	☐	☑	☐	☐	☐	☐	☐	☐
Farris Septic	(800) 978-7900	☐	☐	☐	☑	☑	☐	☐	☐	☐
SoCal Pumping Co.	(866) 479-4976	☑	☑	☐	☐	☐	☐	☐	☐	☐
Royal Flush Pumping	(888) 656-2551	☐	☐	☐	☐	☐	☐	☐	☑	☐
Western Sump Services	(888) 900-0960	☑	☑	☐	☑	☐	☐	☐	☐	☐
Double Barrel Environmental Svs	(909) 499-6959	☐	☐	☐	☐	☐	☑	☑	☐	☐
Ancon Marine	(562) 326-5905	☑	☑	☑	☑	☑	☑	☑	☑	☐
SMC Grease Specialist	(951) 788-6042	☑	☑	☐	☐	☐	☐	☐	☐	☐
Susy Party Rentals	(714) 329-1031	☐	☐	☑	☐	☐	☐	☐	☐	☐
Canyon Septic Services	(714) 649-3226	☑	☑	☑	☑	☑	☐	☑	☐	☐
Three Stars	(714) 293-9232	☐	☐	☑	☐	☐	☐	☐	☐	☐
Shoemaker's Enviro-Tech	(661) 296-2394	☑	☑	☐	☐	☐	☐	☑	☐	☐

Appendix G-1

Recommended Capacity Improvement Projects

Future Housing Developments

Area	Location	Land Use	No. Units	Unit Type	Area (ac)	Density (du/ac)	Unit Flow Factor (gpd/unit)	Total Ave Load (gpd)
1	***Construction Completed***							
2	***Eliminated***							
3	SE corner of Chapman Ave and Brookhurst St	High Density Residential	250	DU	8.3	30.1	225	56,250
4	NW corner of Brookhurst and Garden Grove Blvd (Brookhurst Triangle)	High Density Residential	550-750	DU	18.6	33-45	225	168,750
		General Commercial/Retail	200	TSF			125	25,000
							Subtotal for Area 4	**193,750**
5	***Eliminated***							
6	***Eliminated***							
7	***Construction Completed***							
8	***Eliminated***							
9	South of Garden Grove Blvd at West St (Orion 8)	Low Density Residential	10-30	DU	0.4	25-75	300	9,000
10	NE corner of Garden Grove Blvd and West St	High Density Residential	200	DU	2.3	86.2	225	45,000
11	***Eliminated***							
12	***Construction Completed***							
13	***Construction Completed***							
14	Northwest corner of Harbor Blvd and Twintree Ln	Hotel	500	Rooms	3.9		150	75,000
		Restaurant	10	TSF			1000	10,000
		Indoor/Outdoor Water Park[1]	100	TSF				10,600
							Subtotal for Area 14	**95,600**
15	North of Chapman Ave and west of Harbor Blvd (Lamplighter Pit)	Hotel	235	Rooms	9.4		150	35,700
		Restaurant	5	TSF			1,000	5,000
							Subtotal for Area 15	**40,700**
16	Northeast corner of Harbor Blvd and Twintree Ln	Hotel	700	Rooms	5.2		150	105,000
		Restaurant	15	TSF			1,000	15,000
							Subtotal for Area 16	**120,000**
17	***Construction Completed***							
18	***Eliminated***							
19	***Eliminated***							
20	***Eliminated***							
21	***Construction Completed***							
22	***Construction Completed***							
23	***Construction Completed***							
24	***Construction Completed***							
25	SE corner of Addelle St and Stanford Ave	Low Density Residential	12	DU	0.8	15.5	300	3,600
26	***Construction Completed***							
27	***Construction Completed***							
28	***Construction Completed***							
29	South side of Garden Grove Blvd, west of Brookhurst St (Galleria Project)	High Density Residential	400	DU	2.2	184.0	225	90,000
		General Commercial/Retail	17	TSF			125	2,125
							Subtotal for Area 29	**92,125**
30	8218-8242 Garden Grove Blvd	High Density Residential	46	DU	1.51	30.5	225	10,350
31	***Construction Completed***							
32	***Construction Completed***							
33	SW Corner of Chapman Ave and Brookhurst St	Restaurant	11	TSF	25.9		1000	11,000
34	North side of Garden Grove Blvd, east of Galway St	General Commercial/Retail	30	TSF	1.0		125	3,750
35	South side of Garden Grove Blvd at Village Rd	General Commercial/Retail	60	TSF	3.1		125	7,500
36	West side of Nelson St, north of Stanford Ave	Low Density Residential	12	DU	1.3	9.4	300	3,600
37	SW corner of Garden Grove Blvd and Euclid St	General Commercial/Retail	15	TSF	0.5		125	1,875
38	North side of Hazard Ave, west of Euclid St	High Density Residential	90	DU	6.0	15.0	225	20,250
39	Between Harbor Blvd and Buaro St	General Commercial/Retail	12	TSF	0.6		125	1,500
40	Southwest corner of Harbor Blvd and Twintree Ln	Hotel	400	Rooms	3.74		150	60,000
41	South side of Garden Grove Blvd, east of Euclid St, at Galway Downs Boulevard	High Density Residential	16	DU	0.65	24.6	225	5,538
42	West side of Buaro St, south of Chapman Ave, at 12111 Buaro Street	Medium Density Residential	17	DU	1	17.0	275	4,675
43	Northwest corner of Lewis St and Garden Grove Blvd, at 12901 Lewis Street	Low Density Residential	70	DU	9	7.8	300	2,333
44	9841 11th Street, Garden Grove,	Medium Density Residential	31	DU	1.76	17.6	275	4,844
45	9841 11th Street, Garden Grove	Medium Density Residential	101	DU	0.44	22.77	275	6,250

[1] It is estimated that a maximum of 10,000 gpd of the carry off will enter the sewer system. Each filtration system will use 600 gpd per backwash and the backwash of the systems will be time staggered to flush only one of the systems per day. The indoor/outdoor water park load is not peak-ed in the model.

N

0 1,000 2,000 4,000 Feet

Legend

- GGSD Boundary
- GGSD Sewer
- OCSD Trunk Sewer
- Owned by Others
- Calculated Hydraulic Deficiency
- Projects in Designed
- Improvement Project Completed
- (#) Project Number
- ##" Proposed Pipe Size
- Proposed Diversion Location
- Connection to OCSD Trunk Sewer or Outlet from GGSD
- Existing Wastewater Pump Station
- Existing Forcemain
- Anticipated Densification Area

Garden Grove Sanitary District
Sewer System Management Plan

Appendix G-1
Recommended Capacity Improvement Projects
Date: April 2020

Appendix G-2

Ordinance No. 10

ORDINANCE NO. 10

AN ORDINANCE OF THE GARDEN GROVE SANITARY DISTRICT AFFIRMING ESTABLISHED SEWER USER FEES FOR SEWER SERVICES WITHIN GARDEN GROVE SANITARY DISTRICT SERVICE AREA, CLARIFYING EXISTING PROVISIONS, AND AUTHORIZING FUTURE AUTOMATIC ADJUSTMENTS IN SEWER USER FEES TO ACCOUNT FOR INFLATION

District Counsel Summary

This Ordinance affirms existing established sewer user fees and related Garden Grove Sanitary District regulations, implements annual inflationary adjustments to sewer user fees for a period of five (5) years, confirms existing regulatory language that property owners are subject to a separate sewer user fee for each portion of a parcel served by a separate metered water service, confirms that sewer user fees may be billed to and/or paid by tenants along with bills for water service, but property owners remain ultimately responsible for the payment of all sewer user fees applicable to their property, and clarifies that tenants paying sewer user fees are also eligible for rebates or refunds, where applicable.

THE BOARD OF DIRECTORS OF THE GARDEN GROVE SANITARY DISTRICT hereby finds as follows:

A. On September 13, 2005, the Garden Grove Sanitary District Board of Directors (Board of Directors) adopted Ordinance No. 7 establishing revised Sewer User Fees for sewer services within the Garden Grove Sanitary District (District) service area.

B. Ordinance No. 7 implemented a new Sewer User Fee structure, based on the use of the sewer system, in order to generate sufficient revenue to operate, maintain, replace, and upgrade the system to adequate capacity and make repairs mandated pursuant to Order No. R8-2002-0014, General Waste Discharge Requirements for Sewage Collection Agencies in Orange County, issued by the Regional Water Quality Control Board, Santa Ana Region (the 2002 Order).

C. The 2002 Order required all sewer collection agencies to prepare a Sewer System Management Plan (SSMP) to address the capacity deficiencies; structural deficiencies; fats, oils and grease control; and proper funding, operation, and maintenance of their sewer systems. Pursuant to the 2002 Order, the District prepared and adopted a SSMP, which included a System Evaluation and Capacity Assurance Plan and Rehabilitation and Replacement Plan.

D. In conjunction with the SSMP, in 2005, the District prepared an updated Financial Analysis and Rate Study resulting in the development of a Capital Improvement Program and an enhanced maintenance program in compliance with the 2002 Order, along with a financial model to evaluate the rate structure necessary to generate sufficient revenues to allow the District to meet its obligations. The 2005 Financial Analysis and Rate Study was submitted to the

Board of Directors and made available to the general public at a Public Hearing prior to the adoption of Ordinance No. 7.

E. Ordinance No. 7 and the revised charges for sewer service established through Ordinance No. 7 were based on the findings and recommendations set forth in the 2005 Financial Analysis and Rate Study, as such recommendations were revised based on comments received at the Public Hearing.

F. In 2006, the 2002 Order was superseded by Order No. 2006-003-DWR, Statewide General Waste Discharge Requirements for Sanitary Sewer Systems, issued by the State Water Resources Control Board (the 2006 Order). The 2006 Order continues to require implementation of an SSMP and mandates that local sewer collection agencies establish proper rate structures to adequately fund the operation, maintenance, repair and replacement of their sanitary sewer systems.

G. The District has subsequently continued to inspect and evaluate its sanitary sewer system facilities and to update its SSMP to reflect necessary identified structural and capacity deficiencies. Amendments to the District's SSMP reflecting these updates were adopted by the Board of Directors in 2009 and 2011.

H. In conjunction with these SSMP updates, District staff and consultants have updated the financial model developed pursuant to 2005 Financial Analysis and Rate Study, conducted an evaluation of the adequacy of the existing rates to satisfy the District's obligations, and prepared an updated Financial Analysis (which is made a part of the public record of the Public Hearing) that updates and supplements the 2005 Financial Analysis and Rate Study, and that recommends continued implementation of the rate structure established pursuant to Ordinance No. 7, including continued implementation of annual inflationary increases based on the Engineering News Record's Cost Index for the Los Angeles Area.

I. Government Code Section 53756 authorizes any agency providing sewer service to adopt a schedule of fees or charges authorizing adjustments for inflation for a period not to exceed five (5) years.

J. The purpose of this Ordinance is to authorize annual inflationary adjustments to the Sewer User Fees in accordance with Government Code Section 53756, affirm the existing Sewer User Fees as originally authorized by Ordinance No. 7, and to make such other changes to the District's regulations pertaining to Sewer User Fees as are necessary to conform to existing law and/or to clarify certain provisions. The amounts set forth in Table A of Subsection 3.B. of this Ordinance reflect the current legal rates and charges, as lawfully established and adjusted in accordance with Ordinance No. 7 and State law, and do not reflect new or additional increases in the rates and charges imposed by the District for sewer services.

K. In support of this Ordinance and the charges for sewer service as provided for on Table A herein, the 2005 Financial Analysis and Rate Study and the updated Financial Analysis, as approved hereby by the Board of Directors, has resulted in the development of a Capital Improvement Program and an enhanced maintenance program consistent with the goals and policies of the Board of Directors and the public, which also provide for the construction of necessary improvements to eliminate existing capacity deficiencies in the system, accommodate projected increased flows and the rehabilitation and refurbishment of existing facilities. The Board of Directors further finds that programming annual inflation adjustments in sewer service charges over a period of years is appropriate and ensures adequate revenues to finance the improvements and programs necessary to eliminate existing capacity deficiencies in the system, accommodate projected increased flows, rehabilitate, replace, and refurbish existing facilities, and retire any necessary or prudent debt incurred to finance such improvements in a reasonable manner and over a reasonable period of time. The Board of Directors also finds that such Sewer User Fees are reasonably related to, and do not exceed the cost of providing sewer services.

L. The financial requirements of the District, as shown in reports prepared by staff and consultants relating to the sewerage system, are based on current, reliable information and data relating to population estimates, wastewater flow, capital facilities' needs, and increased proper maintenance, and are expected to be realized in each year as described in the reports.

M. The revenues derived under the provisions of this Ordinance will be used for the acquisition, construction, reconstruction, maintenance, and operation of the sewage collection facilities of the District; to repay principal and interest on debt instruments; to repay Federal and State loans issued for the construction and reconstruction of said sewerage facilities, if any, together with costs of administration and provisions for necessary reserves.

N. The owners or occupants of properties upon which all fees and charges established and/or affirmed by this Ordinance are levied discharge wastewater to the District's collection facilities. The costs of operating and maintaining said facilities have constantly increased due in part to increased regulatory requirements to upgrade the collection system including, but not limited to, the Order No. 2006-003-DWQ, Statewide General Waste Discharge Requirements for Sanitary Sewer Systems, issued by the State Water Resources Control Board on May 2, 2006.

O. The need for upgraded and improved maintenance of the sewage collection facilities is required to protect the public health and safety, and to preserve the environment without damage.

P. The Sewer User Fees levied by this Ordinance are to allow the District to recover the reasonable costs to provide a service to individual properties which have been improved for any of numerous types of uses. The basis for the

respective charge is the request of the owner of property or a structure thereon, for the benefit of him/her/itself, or the occupants of the property, to receive a service based upon actual use, consumption, and disposal of wastewater to the District's system in lieu of disposal by other means.

Q. The Board of Directors has determined the following with regard to the Sewer User Fees established and/or affirmed by this Ordinance: (i) such fees and charges are not imposed as a condition of approval of a development project, as defined in California Government Code Section 66001; (ii) such fees and charges are established upon a rational basis between the fees charged each customer and the service and facilities provided to each customer of the District; (iii) the revenues derived from such fees and charges do not exceed the estimated reasonable cost to provide the sewer service for which the fees and charges are levied; (iv) the revenues derived from such fees and charges shall not be used for any other purpose than that for which the fees and charges are imposed; (v) such fees and charges do not exceed the proportional cost of the sewer service attributable to each consumer; (vi) such fees and charges are imposed on sewer services which are actually used by or immediately available to the consumer; (vii) such fees and charges are not levied for general governmental services; and (viii) the rates and charges are not discriminatory or excessive, are sufficient under Government Code section 54515, comply the provisions or covenants of any outstanding revenue bonds of the District payable from the revenues of the District, comply with the provisions of Title 5, Division 2, Chapter 6 of the California Government Code, and are in compliance with all other applicable law.

R. The Sewer User Fees adopted and/or affirmed herein will not necessarily result in an expansion of facilities to provide for growth outside the existing service area. The adoption and/or affirmation of these Sewer User Fees will not result in any specific project, nor result in a direct physical change in the environment.

S. The District is required by Federal and State law, including the Federal Water Pollution Control Act, also known as the Federal Clean Water Act (33 U.S.C. 1251, et seq.), and the Porter-Cologne Water Quality Control Act (California Water Code Sections 13000 et seq.) to implement and enforce a program for the regulation of wastewater discharges to the District's sewers.

T. In accordance with Proposition 218, notice of a Public Hearing to consider the proposed adjustments in sewer rates and charges and containing such information required to be included pursuant to California law was mailed to all record owners of affected property to the addresses as they appear on the latest equalized assessment roll and to all District customers located on the affected parcels at the addresses to which the District customarily mails the billing statements.

U. On February 14, 2012, in accordance with applicable legal requirements, the Board of Directors conducted a duly noticed Public Hearing to consider the proposed adjustments in sewer rates and charges set forth herein, at which time all those who wished to speak for or against the proposed adjustments in sewer rates and charges were heard and the Board of Directors heard all objections and protests to the proposed adjustments in sewer rates and charges. The District received 88 written protests against the proposed adjustments in sewer rates and charges, which does not constitute a majority protest, as defined in Proposition 218.

V. Pursuant to California Government Code Section 66016 notice of the time and place of this Public Hearing, including a general explanation of the matter to be considered and a statement that the data required by Government Code Section 66016 has been available for public review at the District, was mailed to interested parties requesting notice at least fourteen (14) days prior to the Public Hearing.

W. Pursuant to California Government Code Section 66016 the District made available to the public the updated Financial Analysis, and other data documenting the estimated costs required to provide services for which the proposed modified rates and charges will be levied and the revenue sources anticipated to provide the services.

X. All fees and charges established and/or affirmed herein have been approved by the Board of Directors at a noticed public meeting, all in accordance with applicable provisions of law.

Y. The adoption of this Ordinance and the establishment of such rates and charges is statutorily exempt under the California Environmental Quality Act ("CEQA") pursuant to the provisions of Public Resource Code Section 21080(b)(8) and Section 15378 and Section 15273 of the CEQA Guidelines because, (i) the increased rates and charges are for the purpose of meeting operational and maintenance expenses of the District, and (ii) the rates and charges constitute the creation of funding mechanism/other governmental fiscal activity that does not involve any commitment to any specific project which may result in a potentially significant physical impact on the environment.

The Board of Directors of the Garden Grove Sanitary District hereby ordains as follows:

Section 1: Purpose and Scope. The purpose of this Ordinance is to establish Sewer User Fees required to be paid by property owners for the services and facilities furnished by the District in connection with its sewage collection system. Revenues derived under the provisions of this Ordinance shall be used for the acquisition, construction, reconstruction, maintenance, and operation of the wastewater collection facilities of the District; to repay principal and interest on

debt instruments; or to repay federal and state loans, if any, issued for the construction and reconstruction of said sewerage facilities, together with costs of administration and provisions for necessary reserves.

Section 2: Sewer User Fees. Commencing with the effective date of this Ordinance, the owner(s) of each parcel of real property located within the District that is improved with structures designed for residential, commercial, industrial, school, or other use and which, at the request of the owner or the owner's predecessor-in-interest, is connected to the District's system, shall pay a monthly Sewer User Fee or monthly Sewer User Fees based on the respective class of users, in the sum or sums, as set forth in Section 3 of this Ordinance, below. Property owners are subject to a separate Sewer User Fee for each portion of a parcel served by a separate metered water service. The District's billing to, and/or periodic acceptance of payment from, a tenant shall not relieve the owner(s) of a parcel of property from the obligation to pay any unpaid Sewer User Fees due pursuant to this Ordinance.

Section 3: Establishment of Sewer User Fees. Based on the engineering and financial studies, and pursuant to provisions of California Health & Safety Code Section 5471, the following sewer service charges are hereby established.

A. Sewer Service Rate Formula. The owner of each parcel of land connected to the District's sewer collection system shall be assigned to one or more customer classes, based on property use, and shall pay a monthly sewer service charge for each portion of the parcel served by a separate metered water service, computed according to the following formula:

Base Rate (according to customer class), plus Usage Charge of $0.86 per hundred cubic feet ("HCF") of water used per month during the bi-monthly period of lowest consumption (determined annually, based on analysis of 12 months of water billing data), not to exceed the Maximum Billing Cap designated for each customer class.

B. Customer Classes and Rates. The following sewer customer classes and rates are hereby established:

TABLE A

User Class	Base Rate	Maximum Billing Cap
Residential – SFR and Duplex	$ 3.98/metered d.u.	$ 12.61
Car Wash	$ 58.78	$185.86
Church	$ 14.28	$ 45.16
Commercial 1*	$ 3.98	$ 12.61

Commercial 2*	$ 7.98	$ 25.23
Commercial 3*	$ 15.95	$ 59.09
Commercial 4*	$ 31.90	$118.17
Commercial 5*	$ 59.83	$232.37
Commercial 6*	$ 79.78	$252.32
Hotels/Motels	$ 79.78	$252.32
Private School	$ 41.29	$130.58
Hospital	$223.37	$706.48
Industrial	$ 44.11	$139.52
Laundromat	$ 54.83	$173.36
Multi-Unit Residential**	$ 33.76/water meter	$106.83
Public School	$ 53.35	$168.69

"Commercial 1 through Commercial 6" set forth above are defined to mean commercial, retail and related uses collectively, unless otherwise set forth specifically in the matrix, and includes any other land use not described in the above stated matrix. Further, the General Manager of the District, or his designee, shall make administrative determinations as necessary to determine in individual cases the most applicable land use category for a particular property. In so doing, the General Manager, or his designee, shall utilize the land use matrix for land uses as set forth in Garden Grove Municipal Code Section 9.16.020.030.

**Where individual units are not connected directly to the sewer system, a charge of $1 per month, per unit will be assessed in addition to the base rate and usage charge rate for this user class.

*Commercial Class Rates are based upon those persons or entities who consume metered water quantities in accordance with the following schedule:

Class #	Per 100 cu. Ft. of Water/Month
1	0 - 10
2	10.1 - 20
3	20.1 - 50
4	50.1 - 100
5	100.1 - 200
6	200 or greater

C. Adjustments for Inflation. The usage charge, base rates and maximum billing caps established in Sections 3.A. and 3.B. above will be adjusted for inflation annually on July 1, commencing July 1, 2012, and continuing through July 1, 2016, based on the same percentage as the percentage of increase in construction costs between March 1 of the calendar year immediately preceding March 1 of the then current calendar year, based on the Engineering News Record

Construction Costs Index – Los Angeles Area, without further action by the Board of Directors. However, if the inflation adjustment in any year exceeds six (6) percent under the inflation index set forth above, the amount of the inflation adjustment shall be presented to the Board of Directors for final legislative determination. The General Manager of the District, or his designee, shall cause notice of any automatic adjustment made pursuant to this Subsection (C) to be given pursuant to Subdivision (a) of Government Code Section 53755, as it may be amended from time to time, and/or other applicable law, not less than thirty (30) days before the effective date of the adjustment.

Section 4: Rebates or Refunds.

A. Exemptions. It is the intent of the District that the legal owner(s) and/or tenants of parcels of real property otherwise subject to the levy and payment of the Sewer User Fees as prescribed herein, be relieved, in whole or in part, from the payment of said fees, in certain circumstances and under conditions prescribed herein, and be entitled to either a rebate or a refund with respect to fees paid, as more specifically set forth in subparagraphs 4.B. and 4.C. below, provided an inequity is established or a billing error is proven, as specified in subparagraphs 4.B. or 4.C.

B. Application for Rebate. Any property owner or tenant made responsible by the property owner for payment of the Sewer User Fees may apply to the District for a rebate of Sewer User Fees paid to the District by establishing that an incorrect classification of the property, or portion thereof, has been made by the District. An applicant for a rebate must establish, by proof satisfactory to the General Manager of the District, or his designee, that an inequity exists between the amount of the charge paid and the amount of wastewater discharged to the District's system, resulting in an incorrect classification. Satisfactory proof shall establish that either:

(1) The principal water use is agricultural or horticultural and wastewater is not discharged from the property to the District's system; or

(2) The property, or applicable portion thereof, is devoted to any other use wherein the amount of wastewater discharged to the District's system is significantly less on a regular basis than the amount that would normally be expected to be discharged by the class of property in question.

Satisfactory proof shall include, but not be limited to, documentation showing actual water usage for each billing cycle during the entire period for which the rebate is sought.

The amount of any rebate shall not reduce the charge payable by any property owner, whose property is connected to the District's system, to less than

the charge would be if the property was assigned to the single family residential user class.

C. Application for Refund. Any property owner or tenant may apply to the District for a refund of Sewer User Fees paid to the District by establishing that the amount paid was pursuant to an error in the amount billed or the amount paid. The applicant for a refund must submit proof satisfactory to the General Manager of the District, or his designee, that a billing error has been made by the District or the County Tax Collector. Such proof shall include, but not be limited to, proof that:

(1) The owner's parcel of property is not connected to the District's system; or

(2) The property has not been classified in the proper land use category; or

(3) A clerical error has been made.

D. Limitations Period. Applications for rebates and refunds shall be deemed to be governed by the provisions of California Revenue and Taxation Code Sections 5096 and 5097, allowing for refunds for a period of four (4) years from the date of payment of the second installment of the bill claimed to be either inequitable or incorrect.

E. Determination. All applications for rebates or refunds of the Sewer User Fees will be determined by the General Manager of the District, or his designee, who, based on the submitted proof, may grant a full or partial rebate or refund.

F. Administrative Fee. At the time of filing the application for rebate or refund, the property owner shall pay the District an administrative fee for the processing of such application. The amount of the fee shall be equal to the total of all fees and charges imposed on the District by any other public entity, such as the Orange County Tax Collector, the Orange County Auditor, or the Orange County Recorder, in connection with the rebate or refund.

G. Underpayment. In the event the District determines that, due to a billing or payment error, or to inequity in the amount billed, a property owner has underpaid annual Sewer User Fees payable to the District, the District may, within four (4) years after the date of mailing of the tax bill:

(1) Collect the amount of any deficiency directly on the County Tax Roll;

(2) Off-set the amount of any deficiency against any amounts that the District determines is owing, by the District, to the property owner, as a rebate or refund under this Ordinance; or

(3) Submit, directly to the property owner, a bill for the amount of any deficiency, that shall be due and payable within thirty (30) days of the invoice date and that, if not paid, shall become a lien on said property.

Section 5: Collection of Sewer User Fees Within the City of Garden Grove. Pursuant to the provisions of California Health & Safety Code Section 5471, the Board of Directors hereby elects to have the Sewer User Fees for parcels within the corporate boundaries of the City of Garden Grove collected with the charges of the City of Garden Grove's water utility, and that these charges may be collected on the same bills as the water charges, or on separate bills, as may be determined by the City of Garden Grove. Bills for Sewer User Fees applicable to a parcel of property, or a portion thereof, may be provided solely to and/or paid by the same person(s) to which bills for water charges are provided, even if not the owner(s) of the property. Notwithstanding the foregoing, the owner(s) of such property shall be and remain responsible for payment of all Sewer User Fees applicable to the property.

Section 6: Collection of Sewer User Fees Outside the City of Garden Grove. Pursuant to the provisions of California Health & Safety Code Section 5473, the Board of Directors hereby elects, in its discretion, to have the Sewer User Fees for those areas outside of the corporate boundaries of the City of Garden Grove collected on the tax roll in the same manner, by the same persons, and at the same time as, together with and not separately from, the general taxes of the District.

Section 7: Severability. If any section, subsection, subdivision, sentence, clause, phrase, word or portion of this Ordinance is, for any reason, held to be invalid by the decision of any court of competent jurisdiction, such decision shall not affect the validity of the remaining portions of this ordinance. The Garden Grove Sanitary District Board of Directors hereby declares that it would have adopted this ordinance and each section, subsection, subdivision, sentence, clause, phrase, word or portion thereof, irrespective of the fact that any one or more sections, subsections, subdivisions, sentences, clauses, phrases, words or portions thereof be declared invalid.

Section 8: The President shall sign and the District Secretary shall certify to the passage and adoption of this Ordinance, and this Ordinance shall take effect immediately upon adoption.

Adopted this 14th day of February 2012.

ATTEST:

/s/ BRUCE A. BROADWATER
PRESIDENT

/s/ KATHLEEN BAILOR
SECRETARY

STATE OF CALIFORNIA)
COUNTY OF ORANGE) ss:
CITY OF GARDEN GROVE)

I, KATHLEEN BAILOR, Secretary of the Garden Grove Sanitary District, hereby certify that the foregoing Ordinance was duly adopted by the Board of the Garden Grove Sanitary District at an Adjourned Regular Meeting held on the 14th day of February 2012, by the following vote:

AYES: MEMBERS: (5) BEARD, DALTON, JONES, NGUYEN, BROADWATER
NOES: MEMBERS: (0) NONE
ABSENT: MEMBERS: (0) NONE

/s/ KATHLEEN BAILOR
SECRETARY

GARDEN GROVE SANITARY DISTRICT
SEWER BUDGET
FY 2010-11 - 2012-13
($000)

	2011-12 Adopted Budget	FY 11-12 Projected Year End	FY 12-13 Proposed Budget	FY 13-14 Forecast
FUNDS AVAILABLE				
BEGINNING BALANCE	$ 625.1	$ 625.1	$ 189.1	$ 1,048.1
BOND PROCEEDS (Annual Allocation)	0.0	0.0	0.0	0.0
REVENUES	10,242.3	10,242.3	10,620.0	10,959.0
RATE ADJUSTMENT	0.0	0.0	0.0	0.0
FUNDS AVAILABLE	10,867.4	10,867.4	10,809.1	12,007.1
OPERATION EXPENDITURES				
OPERATIONS				
LABOR	2,507.2	2,375.7	2,613.7	2,718.0
CONTRACTUAL SERVICES	1,125.0	1,125.0	1,168.2	1,215.0
COMMODITIES	238.2	238.0	233.5	243.0
VEHICLE / EQUIPMENT RENTALS	241.7	241.7	253.7	264.0
INSURANCE	41.7	41.7	41.7	43.0
ADMIN SUPPORT COSTS	512.2	512.2	524.6	546.0
BOND ISSUANCE COSTS	0.0	0.0	0.0	0.0
DEBT SERVICE	1,462.3	1,462.3	1,463.3	1,463.0
LATERAL LOAN PROGRAM	0.0	0.0	0.0	0.0
OPERATING RESERVE	250.0	250.0	0.0	0.0
SEWER SYSTEM CONTINGENCY RESERVE	0.0	0.0	0.0	0.0
TOTAL OPERATION EXPENDITURES	6,378.3	6,246.6	6,298.7	6,492.0
SEWER CAPITAL				
CAPITAL REPLACEMENT	1,431.7	1,431.7	1,462.3	1,506.2
NEW CAPITAL IMPROVEMENTS	3,000.0	3,000.0	2,000.0	2,000.0
CAPITAL EXPENDITURES	4,431.7	4,431.7	3,462.3	3,506.2
TOTAL EXPENDITURES	10,810.0	10,678.3	9,761.0	9,998.2
FUNDS AVAILABLE	10,867.4	10,867.4	10,809.1	12,007.1
EXPENDITURES	10,810.0	10,678.3	9,761.0	9,998.2
ENDING BALANCE	$ 57.4	$ 189.1	$ 1,048.1	$ 2,008.9

Type	User Class	Maximum Monthly Units		Maximum Bi-Mo Units	New Unit Rate	07/01/12 Mo. Base Rate 2.5% ENR	07/01/12 Mo. Max Billing Cap ($0.8627 x 2.5% = $0.8843)	07/01/12 Bi-Mo. Base Rate 2.5% ENR	07/01/12 Bi-Mo. Max Billing Cap ($0.8627 x 2.5% = $0.8843)	
						July 2012 - June 2013 Billing Dates		July 2012 - June 2013 Billing Dates		
R	Residential - SFR	10.00		20.00	0.88	$ 4.08	$ 12.92	$ 8.16	$ 25.84	
D	Duplex	10.00		20.00	0.88	$ 4.08	$ 12.92	$ 8.16	$ 25.84	
W	Car Wash	147.30		294.60	0.88	$ 60.25	$ 190.51	$ 120.50	$ 381.02	
G	Church	35.80		71.60	0.88	$ 14.64	$ 46.30	$ 29.28	$ 92.60	
C/10	Commercial 1*	10.00		20.00	0.88	$ 4.08	$ 12.92	$ 8.16	$ 25.84	
C/20	Commercial 2*	20.00		40.00	0.88	$ 8.18	$ 25.87	$ 16.36	$ 51.74	
C/50	Commercial 3*	50.00		100.00	0.88	$ 16.35	$ 60.57	$ 32.70	$ 121.14	
C/100	Commercial 4*	100.00		200.00	0.88	$ 32.70	$ 121.13	$ 65.40	$ 242.26	
C/200	Commercial 5*	200.00		400.00	0.88	$ 61.33	$ 238.19	$ 122.66	$ 476.38	
C/200+	Commercial 6*	200.00	+	400.00	0.88	$ 81.77	$ 258.63	$ 163.54	$ 517.26	
N	Hotels / Motels	200.00		400.00	0.88	$ 81.77	$ 258.63	$ 163.54	$ 517.26	
E	Private School	103.50		207.00	0.88	$ 42.32	$ 133.85	$ 84.64	$ 267.70	
H	Hospital	560.00		1,120.00	0.88	$ 228.95	$ 724.16	$ 457.90	$ 1,448.32	
I	Industrial	110.60		221.20	0.88	$ 45.21	$ 143.01	$ 90.42	$ 286.02	
L	Laundromat	137.40		274.80	0.88	$ 56.20	$ 177.70	$ 112.40	$ 355.40	
M	Multi-Unit Residential **	84.70		169.40	0.88	$ 34.60	$ 109.50	$ 69.20	$ 219.00	+ $1 per unit/mo
S	Public School/GGUSD	133.70		267.40	0.88	$ 54.68	$ 172.91	$ 109.36	$ 345.82	
B	Public School/Non-GGUSD	133.70		267.40	0.88	$ 54.68	$ 172.91	$ 109.36	$ 345.82	
F	Fire Service									
A	Agriculture									
P	Parks									
Q	Public Sch Fire Spr									
Z	Landscape									
O	Sewer/Septic									